SIEMENS

SIMATIC PCS 7 Process Control System

System components

SIMATIC PCS 7

Catalog
ST PCS 7

Edition
2016

siemens.com/simatic-pcs7

Related catalogs

Catalogs for Process Automation

wwww.siemens.com/pa-catalogs

SIMATIC ST PCS 7 AO
Add-ons for the
SIMATIC PCS 7
Process Control System

E86060-K4678-A121-B2-7600

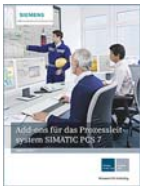

SIMATIC ST PCS 7 T
SIMATIC PCS 7
Process Control System
Technology components

E86060-K4678-A141-A2-7600

SIMATIC ST 70
Products for
Totally Integrated Automation

E86060-K4670-A101-B5-7600

SIMATIC HMI / PC-based Automation ST 80/ST PC
Human Machine Interface Systems
PC-based Automation

E86060-K4680-A101-C3-7600

Industrial Communication IK PI
SIMATIC NET

E86060-K6710-A101-B8-7600

Process Automation FI 01
Field Instruments for
Process Automation

PDF (E86060-K6201-A101-C1-7600)

Process Automation AP 01
Process Analytical Instruments

PDF (E86060-K3501-A101-B2-7600)

Weighing Technology WT 10
Products for Weighing Technology

E86060-K6410-A101-A5-7600

SITRAIN ITC
Training for Industry

Only available in German
E86060-K6850-A101-C5

Products for Automation and Drives CA 01
Interactive Catalog, DVD

E86060-D4001-A510-D6-7600

Industry Mall
Information and Ordering Platform
in the Internet:

www.siemens.com/industrymall

SIMATIC PCS 7 Process Control System

System components

SIMATIC PCS 7

Catalog ST PCS 7 · 2016

Supersedes:
Catalog ST PCS 7 · September 2015

Refer to the Industry Mall for current updates of this catalog:
www.siemens.com/industrymall

The products contained in this catalog can also be found in the Interactive Catalog CA 01.
Article No.: E86060-D4001-A500-D6-7600

Please contact your local Siemens branch.

PEFC
PEFC/04-31-0970

Printed on paper from sustainably managed forests and controlled sources.

www.pefc.org

IQNet
THE INTERNATIONAL CERTIFICATION NETWORK

The products and systems described in this catalog are manufactured/distributed under application of a certified quality management system in accordance with DIN EN ISO 9001 (Certified Registration No. 1323-QM). The certificate is recognized by all IQNet countries.

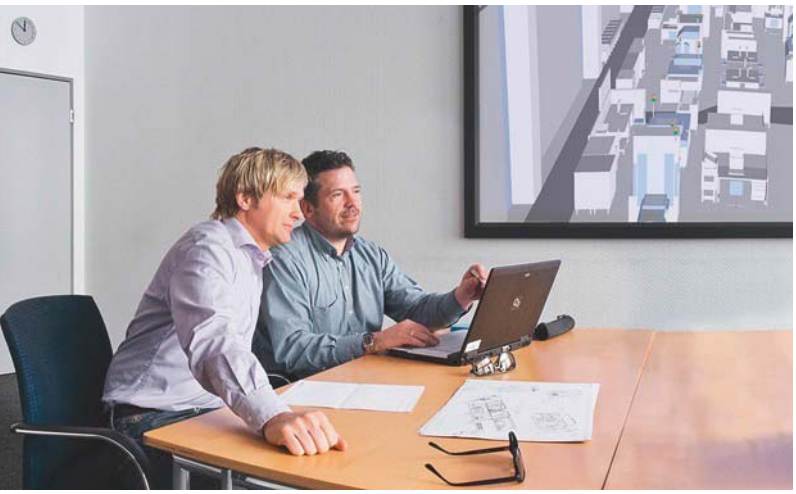

Answers for industry.

Integrated technologies, vertical market expertise and services for greater productivity, energy efficiency, and flexibility.

Siemens is the world's leading supplier of innovative and environmentally friendly products and solutions for industrial companies. End-to-end automation technology and industrial software, solid market expertise, and technology-based services are the levers we use to increase our customers' productivity, efficiency and flexibility.

We consistently rely on integrated technologies and, thanks to our bundled portfolio, we can respond more quickly and flexibly to our customers' wishes. With our globally unmatched range of automation technology, industrial control and drive technology as well as industrial software, we equip companies with exactly what they need over their entire value chain – from product design and development to production, sales and service. Our industrial customers benefit from our comprehensive portfolio, which is tailored to their market and their needs.

Market launch times can be reduced by up to 50% due to the combination of powerful automation technology and industrial software. At the same time, the costs for energy or waste water for a manufacturing company can be reduced significantly. In this way, we increase our customers' competitive strength and make an important contribution to environmental protection with our energy-efficient products and solutions.

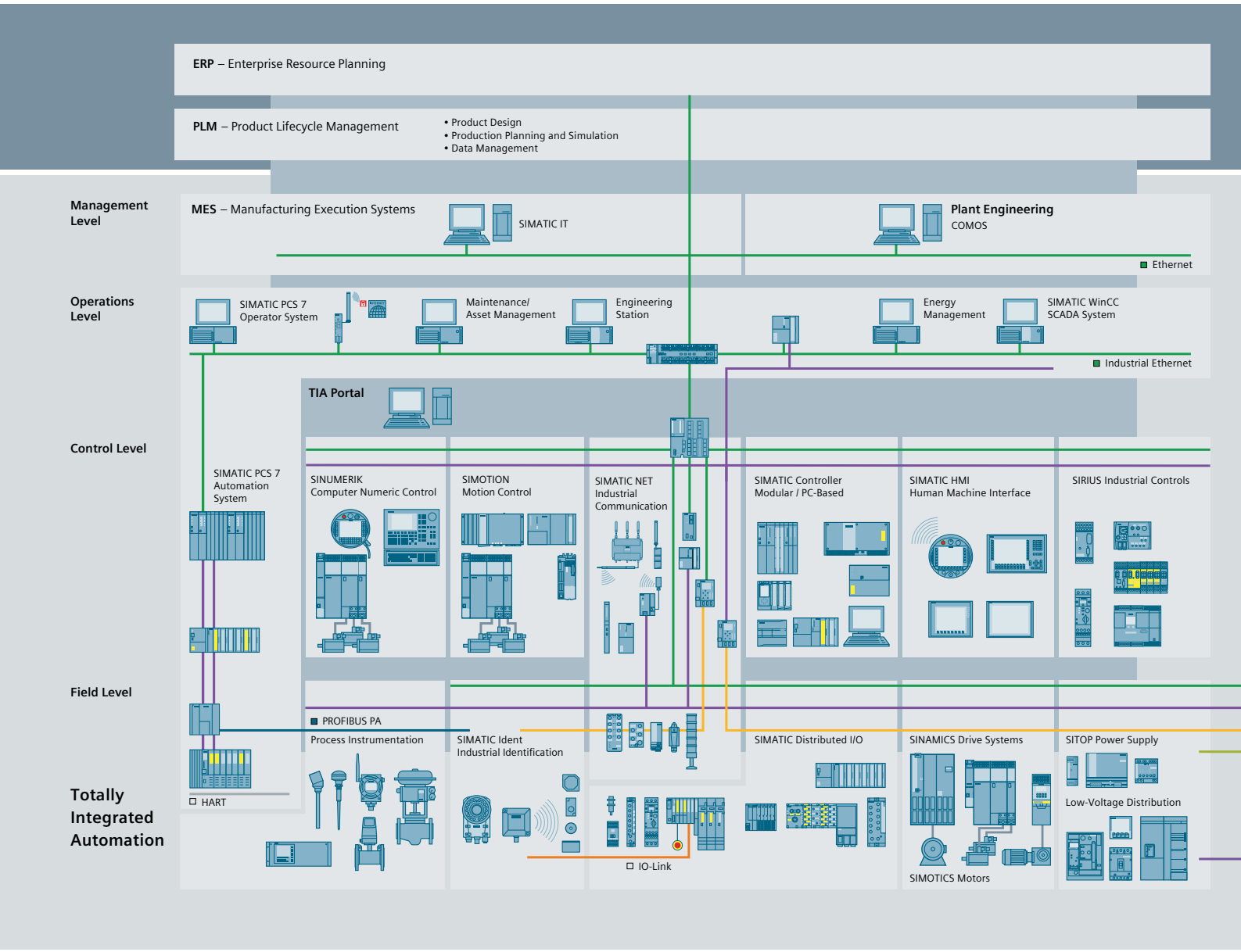

Efficient automation starts with efficient engineering.

Totally Integrated Automation: Efficiency driving productivity.

Efficient engineering is the first step toward better production that is faster, more flexible, and more intelligent. With all components interacting efficiently, Totally Integrated Automation (TIA) delivers enormous time savings right from the engineering phase. The result is lower costs, faster time-to-market, and greater flexibility.

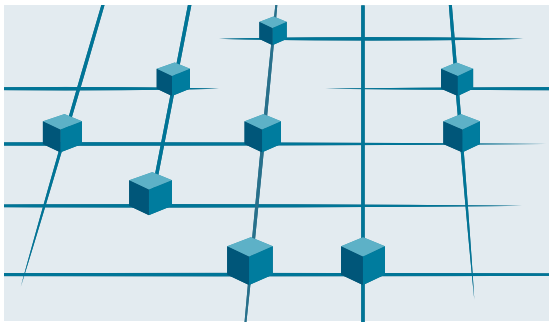

Totally Integrated Automation
Efficient interoperability of all automation components

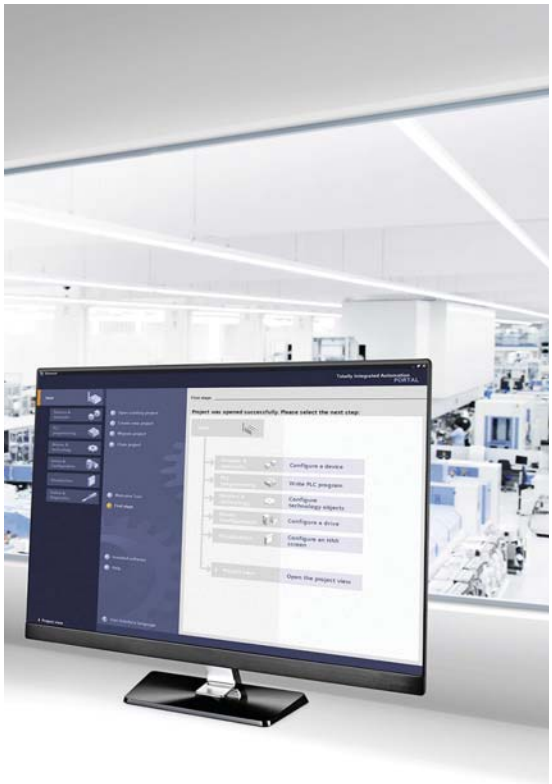

- PROFINET
- Industrial Ethernet
- PROFIBUS
- AS-Interface
- KNX GAMMA instabus

Totally Integrated Power

A unique complete approach for all industries

As one of the world's leading automation suppliers, Siemens provides an integrated, comprehensive portfolio for all requirements in process and manufacturing industries. All components are mutually compatible and system-tested. This ensures that they reliably perform their tasks in industrial use and interact efficiently, and that each automation solution can be implemented with little time and effort based on standard products. The integration of many separate individual engineering tasks into a single engineering environment, for example, provides enormous time and cost savings.

With its comprehensive technology and industry-specific expertise, Siemens is continuously driving progress in manufacturing industries – and Totally Integrated Automation plays a key role.

Totally Integrated Automation creates real value added in all automation tasks, especially for:

- **Integrated engineering**
  Consistent, comprehensive engineering throughout the entire product development and production process
- **Industrial data management**
  Access to all important data occurring in productive operation – along the entire value chain and across all levels
- **Industrial communication**
  Integrated communication based on international cross-vendor standards that are mutually compatible
- **Industrial security**
  Systematic minimization of the risk of an internal or external attack on plants and networks
- **Safety Integrated**
  Reliable protection of personnel, machinery, and the environment thanks to seamless integration of safety technologies into the standard automation

Making things right with Totally Integrated Automation

Totally Integrated Automation, industrial automation from Siemens, stands for the efficient interoperability of all automation components. The open system architecture covers the entire production process and is based on end-to-end shared characteristics: consistent data management, global standards, and uniform hardware and software interfaces.

Totally Integrated Automation lays the foundation for comprehensive optimization of the production process:

- Time and cost savings due to efficient engineering
- Minimized downtime due to integrated diagnostic functions
- Simplified implementation of automation solutions due to global standards
- Better performance due to interoperability of system-tested components

SIMATIC PCS 7 performance you trust

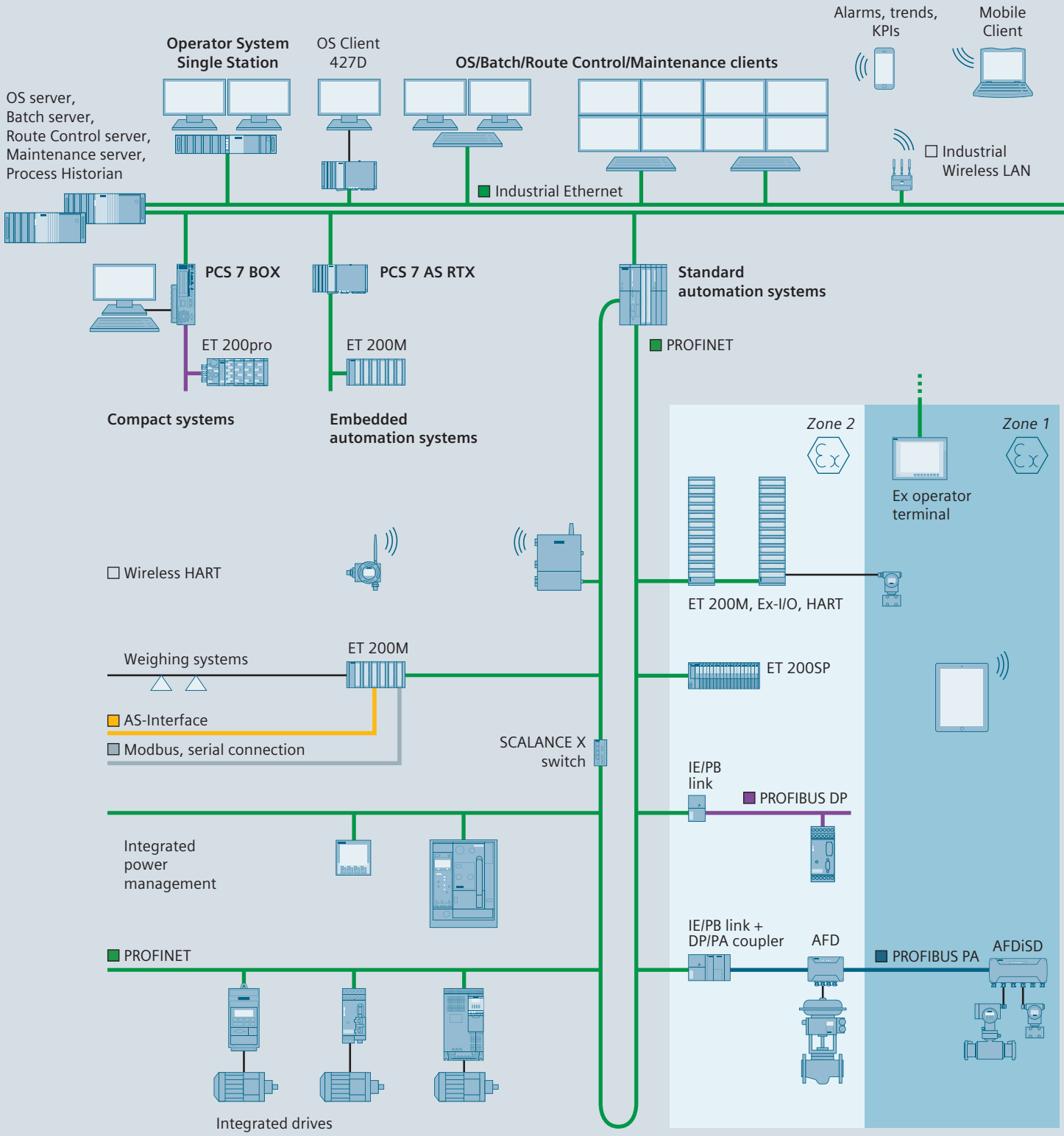

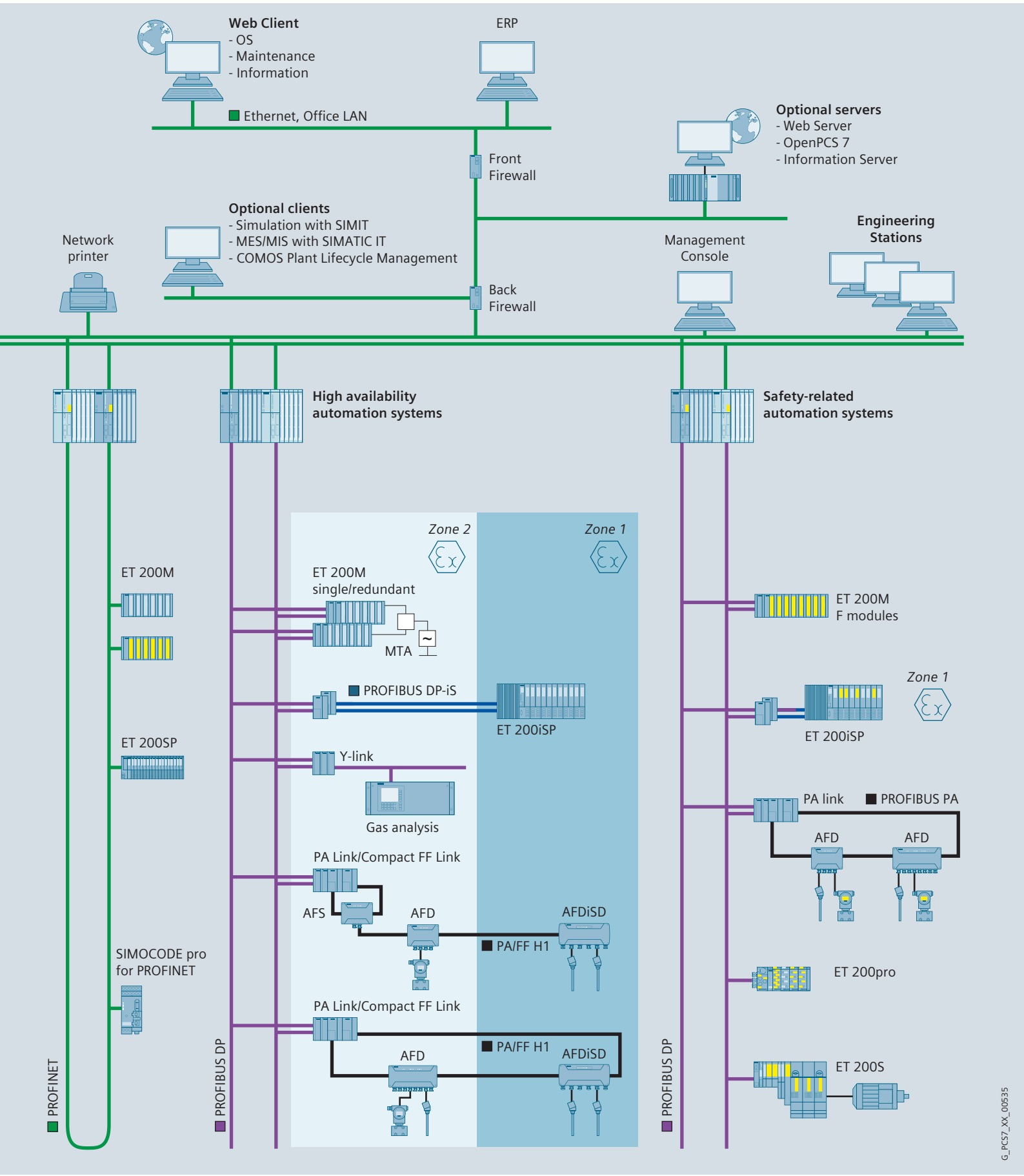

Totally Integrated Automation with SIMATIC PCS 7

SIMATIC PCS 7 is one of the international leaders in process control systems, and has the potential to implement innovative solutions for the special challenges associated with the process industry. The functional diversity, flexibility, and performance of the SIMATIC PCS 7 pushes the limits of a typical process control system, and its technological enhancements offer many additional possibilities and new perspectives.

SIMATIC PCS 7 benefits from its seamless integration in Siemens Totally Integrated Automation (TIA), a complete range of matched products, systems, and solutions for all hierarchy levels of industrial automation - from the enterprise management level, to the control level, all the way down to the field level. This enables uniform, customer-specific automation in all sectors of manufacturing, process, and hybrid industry.

An essential advantage of the consistency of the product and system spectrum and the solutions based upon this spectrum is that faster and more precise control sequences, as well as integrated security functions of shared hardware, engineering, and engineering tools can be used for automation of continuous and discontinuous processes.

Performance you trust

In process plants, the process control system is the starting point for optimal value added: All procedures and processes can be operated, monitored and influenced with the process control system.

The higher the performance of the process control system, the more effectively this potential can be used. For this reason, performance is in the foreground with SIMATIC PCS 7, alongside scalability, flexibility and integration. Starting with planning and engineering, SIMATIC PCS 7 offers powerful tools, functions and features for cost-effective and efficient plant operation through all phases of the plant life cycle.

Performance through integration

Integration is one of the special strengths of SIMATIC PCS 7. It has numerous aspects:

- Horizontal integration into TIA
- Vertical integration into hierarchical communication
- System-integrated tools for engineering tasks
- Integration of the field level, including drives, switchgear, etc.
- Integrated functions, e.g. for batch process automation, route control, process safety, energy management, telecontrol tasks, etc.

Horizontal integration

A system for integrated automation of the entire process chain, from incoming raw materials to outgoing goods – this is one of the decisive advantages resulting from the seamless integration of SIMATIC PCS 7 into Totally Integrated Automation.

The process control system is mainly responsible for automating the primary processes here, but it can do very much more: All ancillary facilities such as the electrical infrastructure in the form of low-voltage or medium-voltage switchgear or the building management system, can also be integrated into the system.

Integration of selected SIMATIC standard components – automation systems, industrial PCs, network components, or distributed process I/O – into the process control system ensures optimum interaction, and secures economic benefits such as ease of selection, reduced stock keeping, and global support.

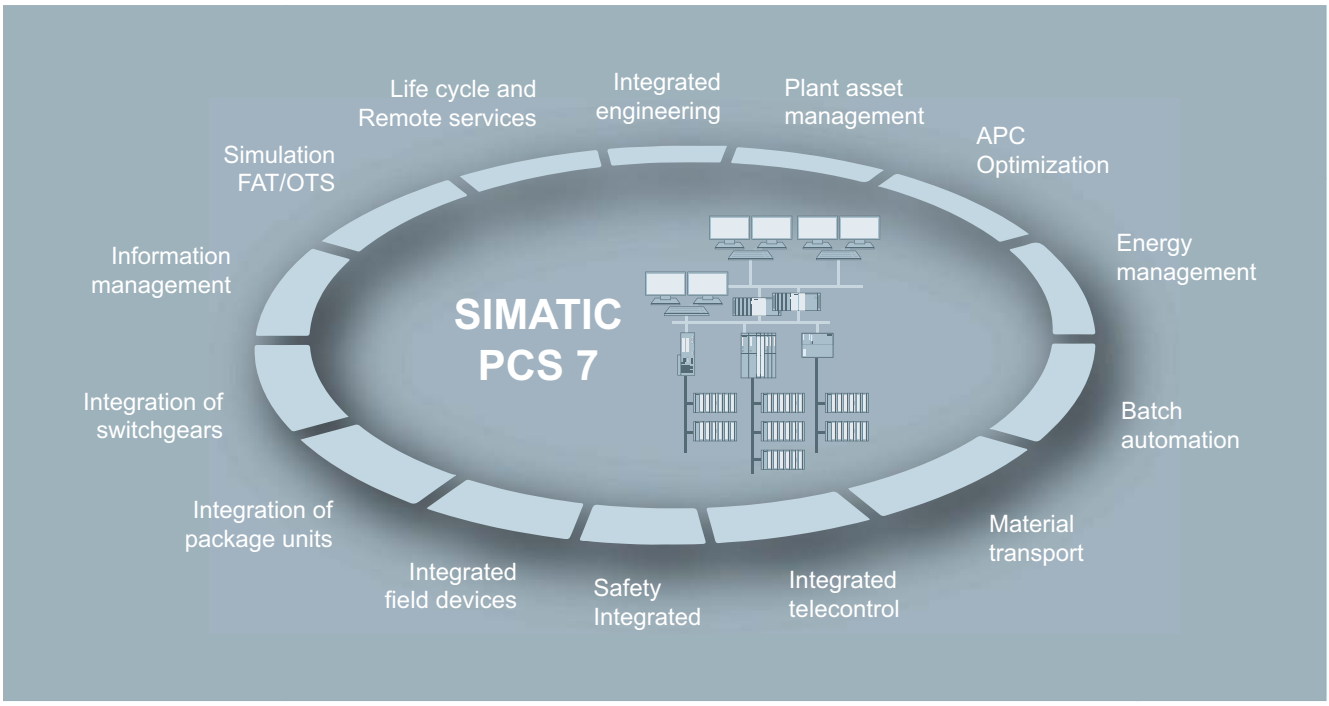

Vertical integration

The hierarchal communication of a company encompasses the field level, the control level and the process level, up to management and enterprise resource planning (ERP). Thanks to standardized interfaces – based on international industry standards as well as internal interfaces – SIMATIC PCS 7 is able to provide process data for analysis, planning, coordination, and optimization of plant sequences or production and business processes – in real time, and at any location in the company.

Central engineering

Impressive features of SIMATIC PCS 7 include graded functional diversity, consistent operator control philosophy and uniformly structured engineering and management tools. A central engineering system with a coordinated range of tools for integrated system engineering and configuring of batch automation, safety functions, material transport or telecontrol systems creates value added over the entire life cycle. Reductions in configuring and training costs minimize the total cost of ownership (TCO) over the entire plant life cycle.

Functional diversity

Depending on the typical process automation or customized requirements, the SIMATIC PCS 7 functions can be expanded by the following, for example:

- Batch process automation (SIMATIC BATCH)
- Functional safety and protection functions (Safety Integrated for Process Automation)
- Route control for material transport (SIMATIC Route Control)
- Telecontrol of remote units (SIMATIC PCS 7 TeleControl)
- Automation of electrical switchgear (SIMATIC PCS 7 PowerControl)

Further additional functions that are also integrated or can be integrated, seamlessly into the control system make optimization of processes and reductions in operating costs possible. SIMATIC PCS 7 features, for example, tools for energy and asset management and it offers higher quality closed-loop control functions, as well as industry-specific automation solutions and libraries.

Customized performance

Thanks to its unique scalable system architecture, SIMATIC PCS 7 provides the ideal basis for cost-effective implementation of individual automation solutions and economic operation of processes.

SIMATIC PCS 7 users derive sustained profit from a modular system platform based on standard SIMATIC components. Its uniformity enables flexible scaling of hardware and software, as well as perfect interaction both within the system and beyond system limits. The architecture of the SIMATIC PCS 7 Process Control System is designed in such a manner that instrumentation and control can be configured in accordance with customer requirements and optimally matched to the dimensions of the plant. The control system can be subsequently expanded or reconfigured at any time if there is an increase in capacity or a technological modification. When the plant grows, SIMATIC PCS 7 simply grows along with it – without the provision of expensive reserve capacities!

Performance in engineering

With regard to planning and engineering, performance can be equated with minimizing time and costs. SIMATIC PCS 7 offers a unique approach here in conjunction with COMOS: Integrated planning workflow from the description of the process to the automation program.

A standardized system interface, strictly object-oriented working and centralized data management mean data consistency across all planning steps including automatically updated system documentation.

Engineering using other planning tools is also mastered extremely efficiently by SIMATIC PCS 7 by means of the Advanced Engineering System (AdvES). This makes it easy to import plant data from CAD/CAE tools. It additionally allows automatic generation of the AS configuration thanks to simple multiplication of process tag types and model solutions, as well as parameter processing.

Performance in operation

Process control is also becoming increasingly complex due to the multi-layer nature of automation engineering and increased merging with information technology. Intuitive and fault free operation is therefore more important than ever with regard to efficient working and the minimization of downtimes and servicing requirements. Using effective Advanced Process Control (APC) functions and an excellent operator system, SIMATIC PCS 7 supports both optimization and user-friendly, safe control of the process. Monitoring of product quality and performance indicators additionally allows the process to be operated more economically. SIMATIC PCS 7 excels with its flexibility, plant availability, and investment security.

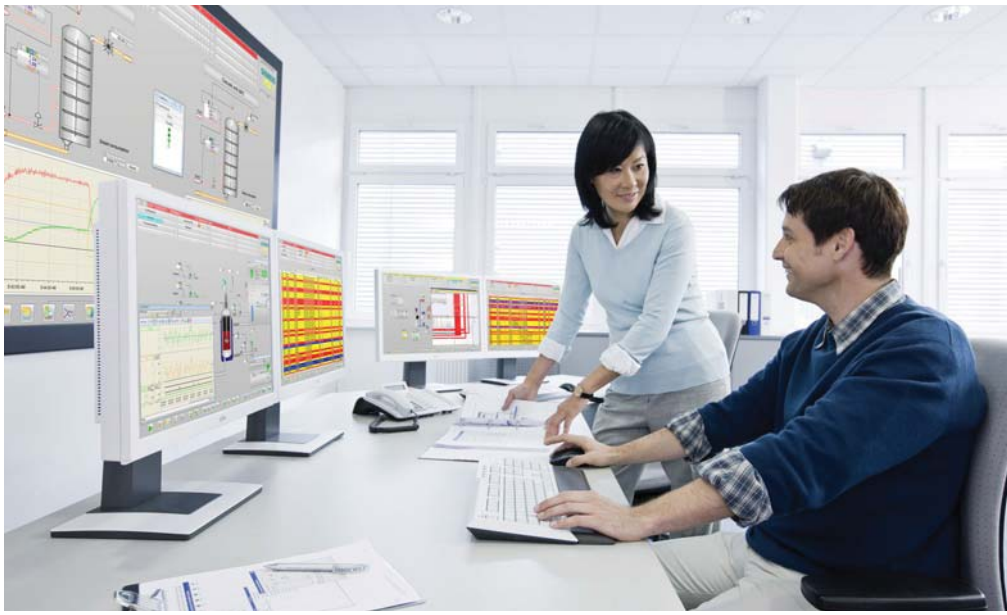

Process control and maintenance

The SIMATIC PCS 7 operator system is used to monitor process operation using various views, and permits interventions when necessary. Its architecture is flexible and scalable – from single-user systems up to multi-user systems with a redundant client/server architecture. The operator interface takes account of the current specifications of NAMUR (user association of automation technology in the process industries) and PI (Profibus International) and offers a high level of user-friendliness for simple, intuitive interaction with the plant. Ergonomic symbols, task-oriented faceplates, uniform representation of status information, and optimized alarm functions allow safe process control.

The alarm management function integrated in SIMATIC PCS 7 is able to focus on essential alarms and to specifically guide the operator in exceptional circumstances. In this way, it systematically reduces the workload of operating staff.

Preventive and predictive maintenance strategies reduce total cost of ownership. With the SIMATIC PCS 7 Maintenance Station, maintenance personnel always have a watchful eye on critical production equipment such as pumps, valves, distillation columns or motors, and can carry out the relevant maintenance measures in good time before servicing is required – independent of the maintenance plan and without the risk of an unscheduled plant standstill.

Process optimization

SIMATIC PCS 7 supports process optimization in many different ways, including:

- Control Performance Monitoring
- Advanced Process Control
- Process Historian

The Control Performance Monitoring function monitors and signals the control quality of the closed-loop control block. If the performance declines, the controller can be optimized in good time or specific maintenance measures can be initiated.

The integrated I&C libraries of SIMATIC PCS 7 also provide higher quality closed-loop control functions with which cost-effective Advanced Process Control applications can be implemented: Multi-variable control, predictive control, or override control. It is thus possible to effectively improve profitability, product quality, safety, and environmental protection in small and medium-sized plants.

Current and historic process data form the basis of all optimization. Secure and user-friendly real-time data storage and analysis is handled using the Process Historian. The process values, messages, and batch data managed in the database of the Process Historian can be called extremely rapidly. User-specific processing and visualization of this historic data are supported by the information server, which is a reporting system based on the Microsoft Reporting Services.

SIMATIC PCS 7 system and technology components

With the rugged, high-performance **SIMATIC PCS 7 system components** from Catalog ST PCS 7, you already have a versatile platform for cost-effective implementation and economical operation of your process control systems. Perfect interplay of these system components makes it possible for you to sustain high-quality production and to establish new products significantly faster on the market.

With **SIMATIC PCS 7 technology components** from Catalog ST PCS 7 T that can be seamlessly integrated into the process control system, you can expand the functional scope of the system components in a carefully targeted manner for specific automation tasks.

This covers a wide spectrum, for example:

- Telecontrol for monitoring and controlling remote plant units
- Automation technology for electrical low-voltage or medium-voltage switchgear
- Industry-specific automation systems for the cement and mining industries, as well as for laboratory and training facilities
- Graphical objects for task-oriented optimization of process visualization
- Block libraries for technological functions, package unit and panel integration, monitoring and analyzing mechanical assets, as well as for building automation systems (heating, ventilation, air-conditioning – FMCS/HVAC)
- Editors and function blocks for the efficient configuration of small or medium-sized automation systems with simple parameter control and materials management
- Process analytical technology for quality assurance through optimization of development and production processes based on up-to-date measurements, and critical quality and performance attributes
- Simulation system for testing and commissioning of plant-specific application software
- Flexible, high-performance Manufacturing Execution System (MES)
- System expansion for operator systems for the integration of third-party controllers, programmable logic controllers and package units
- Products for migration of the process control systems APACS+/QUADLOG or Bailey INFI 90/NET 90 with SIMATIC PCS 7

SIMATIC PCS 7 technology components have been released for all versions and service packs of SIMATIC PCS 7 system components. The development and testing of SIMATIC PCS 7 technology components are dependent on the corresponding SIMATIC PCS 7 system components, so versioning and release is normally offset by approximately 3 to 6 months.

Additional functionality can be integrated using add-on products

Modularity, flexibility, scalability, and the openness of SIMATIC PCS 7 offer optimal prerequisites for integrating supplementary components and solutions in the process control system in an applicative manner and thus extend and round off its functionality.

Many supplementary add-on products for SIMATIC PCS 7 have been developed by Siemens as well as by external partners (see Catalog ST PCS 7, Add-ons for the SIMATIC PCS 7 Process Control System). These software packages and hardware components authorized by the system manufacturer enable cost-effective implementation of SIMATIC PCS 7 for special automation tasks.

Software Media and Logistics

Design

Product categories for SIMATIC PCS 7 software

Generally, the SIMATIC PCS 7 and TIA software products offered in Catalog ST PCS 7 can be categorized as follows:

- **Core products** (single, floating or rental license) with:
  - Installation Software (Software Media Package)
  - License key for software licensing
- **Secondary products** (single, floating or rental license) with:
  - License key for licensing of installation software is delivered with a core product or supplied separately
- **Cumulative volume licenses (quantity options)** with
  - License keys for a specific license volume in the form of process objects (POs), archive tags, TAGs, agents, clients, sources or units

All software products categorized in this way are available as packages. As an alternative to this physical form of delivery, the installation software, software and volume licensing are often available online as well.

The available forms of delivery for each product are explicitly specified in the ordering data and identified by different article numbers.

Delivery form package

The products are delivered in a form and package suitable for parcel shipping by conventional means of transportation (e.g. shipped by truck, rail or air) to the shipping address of the customer.

The installation software (Software Media Packages) and product-specific software licenses for the following products are separate packages, which are not merged into a single delivery unit when supplied in package form.

- SIMATIC PCS 7 core products
  (installation software provided as SIMATIC PCS 7 Software Media Package or SIMATIC PCS 7 Software Media Package ASIA)
- SIMATIC PDM, SIMATIC S7 F Systems and SIMATIC Safety Matrix
  (Iinstallation software provided as product-specific software Media package)

The installation software (Software Media Package) is provided once for each ordered item for these products. When ordering more than one item, you can influence the number of software Media packages using the order item. For example, if you order three SIMATIC PCS 7 OS Software Single Station software products as a single ordered item, you will receive only one software Media package. However, if your order is divided into three ordered items, you will receive a software Media package for each of the three software licenses.

Additional software Media packages and volume licenses specified for the corresponding product can be ordered separately depending on the requirement.

The following table illustrates these ordering and delivery logistics:

Order				Product package	
Item No.	**Quantity**	**Product name**	**Article No.**	**Quantity**	**Components**
Ordering of 3 units with one order item					
010	**3**	**SIMATIC PCS 7 OS Software Single Station V8.2 with 100 OS Runtime POs**	6ES7658-2AA28-0YA0	3	License key USB flash drive, certificate of license
				1	SIMATIC PCS 7 Software Media Package
Ordering of 3 units with three order items					
010	**1**	**SIMATIC PCS 7 OS Software Single Station V8.2 with 100 OS Runtime POs**	6ES7658-2AA28-0YA0	1	License key USB flash drive, certificate of license
				1	SIMATIC PCS 7 Software Media Package
020	**1**	**SIMATIC PCS 7 OS Software Single Station V8.2 with 100 OS Runtime POs**	6ES7658-2AA28-0YA0	1	License key USB flash drive, certificate of license
				1	SIMATIC PCS 7 Software Media Package
030	**1**	**SIMATIC PCS 7 OS Software Single Station V8.2 with 100 OS Runtime POs**	6ES7658-2AA28-0YA0	1	License key USB flash drive, certificate of license
				1	SIMATIC PCS 7 Software Media Package

These ordering and delivery logistics are not relevant for products that are typically supplied without a software Media package. They include:

- Secondary products
- Core products with rental license
- Client software

Design (continued)

Delivery form online

We offer online delivery for SIMATIC PCS 7 software and license keys via the Internet as an innovative alternative to the physical delivery of goods. The decisive advantage over the physical delivery of goods lies in the fact that the software and licenses are available imMediately and can be easily managed.

The software products and licenses that can be downloaded have different article numbers. They are ordered through the normal channels, e.g. the Industry Mall.

When ordering via the Industry Mall, you can filter out the ordering data of those products that can be delivered online with reference to the selected branch of the product and offering tree. This can be done by selecting the type of delivery "Online delivery" from a drop-down list on the right of the screen. This way you will achieve a better overview of the online offering.

When ordering a product that can be delivered online, the email address of the ship-to party must be provided. The recipient of the goods is informed by email as soon as the ordered products are available for downloading. The email message with the availability information also contains the login data. Parallel delivery on a data carrier does not take place.

The software, license key and associated documents, e.g. the online certificate of License (CoL), are downloaded in the Automation License Manager (ALM). A license key can be downloaded once only. To log in, the login data received in the email is required. As an alternative, the access data to the Industry Mall account can be used for logging in.

Apart from the download, ALM also supports license management. You can, for example, get an overview of the available licenses or those obtained online, allocate licenses, and run a hardware-specific license analysis.

Ordering data

	Article No.
SIMATIC PCS 7 Software Media Packages	
SIMATIC PCS 7 Software Media Package V8.2[1] Installation software and electronic documentation on DVD, 5 languages (German, English, French, Italian, Spanish), software class A, runs with Windows 7 Ultimate 32/64-bit, Windows Server 2008 R2 Standard 64-bit or Windows Server 2012 R2 Standard 64-bit, and in part also with Windows 10 Enterprise 2015 LTSB 64-bit (for details see product licenses), including trial license for 14 days	
• Physical delivery Software DVDs, certificate of license	**6ES7658-4XX28-0YT8**
• Online delivery Software download, online certificate of license Note: Email address required!	**6ES7658-4XX28-0YG8**

	Article No.
SIMATIC PCS 7 Software Media Package ASIA V8.2[1] Installation software and electronic documentation on DVD, 2 languages (English, Chinese), software class A, runs with Windows 7 Ultimate 32/64-bit, Windows Server 2008 R2 Standard 64-bit or Windows Server 2012 R2 Standard 64-bit, and in part also with Windows 10 Enterprise 2015 LTSB 64-bit (for details see product licenses), including trial license for 14 days	
• Physical delivery Software DVDs, certificate of license	**6ES7658-4XX28-0CT8**

[1] Permanent use of SIMATIC PCS 7 software requires valid software licenses.

More information

Regional product versions

Originally, all SIMATIC PCS 7 software products were designed for international use, i.e. there was only one product version for worldwide use, which was offered in up to 6 languages: English, German, French, Italian, Spanish and Chinese. However, the number of supported languages was not uniform; it varied depending on the product. This internationally usable product variant remains available for all SIMATIC PCS 7 software products.

In addition, a regional "ASIA" product version will also be offered for the SIMATIC PCS 7 Software Media Package and specific SIMATIC PCS 7 software products of the "Engineering System" and "Operator System" system components. The ASIA products are currently available in two languages: English and Chinese (simplified). They are explicitly identified in the name by the suffix "ASIA".

If a product listed in this catalog does not have the suffix "ASIA" in its name, it can always be used globally. However, the following restriction applies: If a regional ASIA product is offered, the pendant for international use does not support the Asian languages (currently Chinese simplified) present in the ASIA product.

The products for international use, i.e. products without the suffix "ASIA", are not intended as the basis for runtime systems with fonts in Asian languages.

The following special points must be observed as a result of the definition of separate products for installation software and licenses. The SIMATIC PCS 7 installation software is available in the form of two data medium packages:

- SIMATIC PCS 7 Software Media Package
- SIMATIC PCS 7 Software Media Package ASIA

The specific ASIA software licenses harmonize exclusively with the SIMATIC PCS 7 Software Media Package ASIA. SIMATIC PCS 7 software licenses for which there is no ASIA pendant can be used with both SIMATIC PCS 7 Software Media Packages.

Overview

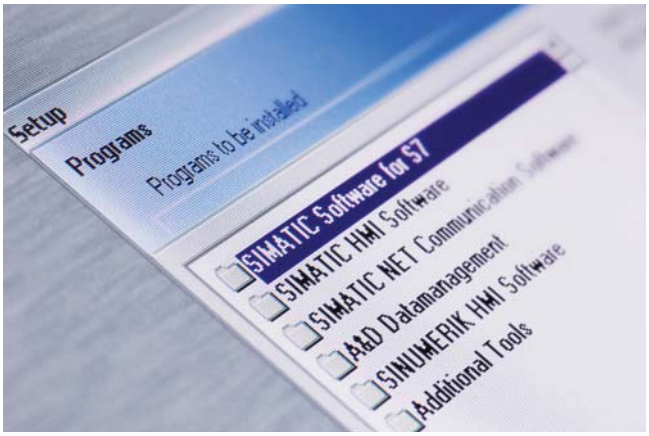

Software Update Service for SIMATIC PCS 7

Siemens offers a cost-effective Software Update Service (SUS) for international SIMATIC PCS 7 software products (except for specially marked regional versions, such products with the "ASIA" label). If you utilize this service, you participate in the further development of the SIMATIC PCS 7 software you are using, and are always in possession of the latest release versions. You can join the software update service for SIMATIC PCS 7 by purchasing SUS packages, and this is only possible on the basis of the current software versions at the time of purchase.

The SUS packages represent a structural division of the SIMATIC PCS 7 software product range using functional and system-specific aspects. The number and composition of the package components identified as **list elements** are mainly characterized by license aspects (see "Design" for structure and contents). A list element can represent a single software product or also be a synonym for several products of the same type.

When purchasing **one** SUS package, you automatically receive all upgrades and ServicePacks for the software referred to in this package for one year. Within this period of one year, you are therefore authorized to update **one** corresponding license from your stock for **each** list element in this package. The total number of SUS packages of one type which you require is therefore determined by the list element which includes most of the software licenses you use.

An example of the SUS OS server package should make this clear once again based on a fictitious license inventory:

Software products in inventory	License inventory	License inventory per list item	Number of SUS packages
• 3 × PCS 7 OS Software Server, 1 × PCS 7 Process Historian Redundancy	3 2	5	5
• 1 × PCS 7 Information Server Basic Package	1	1	
• 3 × PCS 7 SFC Visualization	3	3	

For a list item that represents several products, existing licenses of these products are to be added in the inventory first. In the example, these are the licenses of the "PCS 7 OS Software Server" and "PCS 7 Process Historian Redundancy" for the first list element of the SUS OS server. Be aware that the "PCS 7 Process Historian Redundancy" product contains 2 licenses.

The license inventory is defined by a single product for the other list items. The list item that combines the most licenses is ultimately decisive in determining the number of required SUS packages. Based on the example, you would therefore need to order 5 SUS OS server packages.

Duration of subscription, cancellation

Delivery is to the address entered in the order. An SUS is automatically extended for a further year unless canceled no later than 3 months prior to expiration. Cancellation must be made in writing, and must be sent to the dispatch center with reference to the contract number.

SUS editions

SUS packages are available as:

- SUS Standard Edition
- SUS Compact Edition
- SUS Download Edition

The SUS Standard Edition is the most comprehensive package form. If you order this edition n-times, you will receive n number of packing units.

Each of these packing units contains

- Initial delivery: 1 Certificate of Contract
- Upgrade delivery: 1 data carrier set, 1 license key USB flash drive with **one** license

The SUS Compact Edition reduces the scope of the package for the Software Update Service for multiple workstations and simplifies the central management of licenses.

If you order the SUS Compact Edition n-times, you will receive only one packing unit. This packing unit contains

- Initial delivery: n Certificates of Contract
- Upgrade delivery: 1 data carrier set, 1 license key USB flash drive with **n** licenses

The SUS Compact Edition is offered for the following SIMATIC PCS 7 SUS packages:

- SUS OS single station
- SUS OS server
- SUS OS Client, SFC Visualization
- SUS SIMATIC BATCH Server/Single Station
- SUS SIMATIC BATCH Client

The SUS Download Edition delivered over the Internet has the advantage that software and licenses are available more rapidly than with the physical delivery, and can also be managed more easily.

When delivering the SUS Download Edition, the email address of the consignee is obligatory. An order item can only be assigned to a single email address. The consignee is informed by email as soon as the Certificates of Contract or the software and licenses are available for downloading.

Downloading of software, license keys, and associated documents is carried out in the Automation License Manager (ALM).

SUS Manager

It is easy to manage SUS contracts, e.g. change the delivery form, with the SUS Manager:
www.siemens.com/susmanager

Overview (continued)

The following table uses an example to clarify the differences between the SUS editions:

Edition	SUS Standard Edition	SUS Compact Edition	SUS Download Edition
Delivery form	Physical delivery	Physical delivery	Online delivery
Order	25 × SUS Standard Edition in one order item	25 × SUS Compact Edition in one order item	25 × SUS Download Edition in one order item
First delivery	25 packing units with: • 1 × Certificate of Contract (CoC)	1 packing unit with: • 25 × Certificate of Contract (CoC)	1 email message for • 25 × online certificate of Contract (ECoC)
Subsequent delivery of Service Packs	25 × Service Pack (data carrier set)	1 × Service Pack (data carrier set)	1 × Service Pack (download)
Subsequent delivery of upgrades	25 packing units with: • 1 × data carrier set • 1 × license key USB flash drive with 1 license • 1 × Certificate of License (CoL)	1 packing unit with: • 1 × data carrier set • 1 × license key USB flash drive with 25 licenses • 25 × Certificate of License (CoL)	1 email message for • Software download • 25 × license key download • 25 × Certificate of License online
Billing	1 bill	1 bill	1 bill

If a comparable product exists in a different edition for an existing SUS package, the existing SUS contract can be modified accordingly if required.

Software Update Service for TIA products

In addition to the SUS for the SIMATIC PCS 7 process control system, there is also the SUS for SIMATIC PCS 7 products used in a different context (CFC, SIMATIC PDM) within the scope of Totally Integrated Automation (TIA). The SIMATIC PDM packages SUS PDM Basic und SUS PDM Complete are identical for both cases.

The SUS range is rounded-off by the SUS for SIMATIC S7 products used in the context of SIMATIC PCS 7, e.g. SUS S7-PLCSIM.

Design

Structure and content of the SUS packages for the SIMATIC PCS 7 Software Update Service

Note:

Each item of an SUS package (element in list) represents a software license.

SUS Engineering AS/OS	• PCS 7 Engineering AS/OS, PCS 7 Engineering AS • PCS 7 ES Single Station (AS/OS: 250 POs) • PCS 7 Management Console • PCS 7 Import-Export Assistant • Version Cross Manager • Version Trail • PCS 7 SFC Visualization • PCS 7 BCE • IE S7 license for communication via CP 1623/ CP 1613 A2
SUS PDM Basic[1)]	• PDM Basic PDM Service PDM S7 PDM PCS 7 • PDM HART Server
SUS PDM Complete[1)]	• PDM Stand alone Server • PDM PCS 7 Server • PDM PCS 7-FF • PDM HART Server
SUS OS single station (2 SUS packages are required for a redundant pair)	• PCS 7 OS Software Single Station, PCS 7 OS Software Single Station Redundancy (for one single station) • PCS 7 OpenPCS 7/OS Client • PCS 7 OpenPCS 7 • PCS 7 SFC Visualization • PCS 7 BCE • IE S7 license for communication via CP 1623/ CP 1613 A2

1) Optional product components for SIMATIC PDM such as PDM Extended, PDM Integration in STEP 7/PCS 7, PDM Routing, PDM Server and PDM Communication FOUNDATION Fieldbus are each included in a product package listed in the SUS PDM Basic or SUS PDM Complete and are implicitly authorized to be updated via the corresponding license. You need to change from SUS PDM Basic to SUS PDM Complete to use the PDM Server or PDM Communication FOUNDATION Fieldbus product components.

SUS OS server (2 SUS packages are required for a redundant pair)	• PCS 7 OS Software Server, PCS 7 OS Software Server Redundancy (for one server), PCS 7 Process Historian Basic Package, PCS 7 Process Historian Redundancy (for one server) PCS 7 Process Historian and Information Server Basic Package • PCS 7 Process Historian Archive BATCH • PCS 7 Process Historian OPC UA Server • PCS 7 Information Server Basic Package • PCS 7 OpenPCS 7/OS Client • PCS 7 OpenPCS 7 • PCS 7 SFC Visualization • PCS 7 BCE • IE S7 license for communication via CP 1623/ CP 1613 A2
SUS OS Client, SFC Visualization	• PCS 7 OS Software Client • PCS 7 SFC Visualization
SUS Web Server	• PCS 7 Web Server • PCS 7 Web Diagnostics Server • PCS 7 Web Diagnostics Client
SUS Maintenance Station	• PCS 7 Maintenance Station Engineering • PCS 7 Maintenance Station Runtime Basic Package • PCS 7 OS Software Client
SUS SIMATIC BATCH Server/ Single Station	• PCS 7 SIMATIC BATCH Server • PCS 7 SIMATIC BATCH Single Station Package • PCS 7 SIMATIC BATCH Basic • PCS 7 SIMATIC BATCH API • PCS 7 BCE • IE S7 license for communication via CP 1623/ CP 1613 A2
SUS SIMATIC BATCH Client	• PCS 7 SIMATIC BATCH Client • PCS 7 SIMATIC BATCH Recipe System
SUS SIMATIC Route Control	• PCS 7 SIMATIC Route Control Engineering • PCS 7 SIMATIC Route Control Center • PCS 7 SIMATIC Route Control Server • PCS 7 BCE • IE S7 license for communication via CP 1623/ CP 1613 A2

Ordering data

	Article No.
SUS Standard Edition	
SIMATIC PCS 7 Software Update Service, Standard Edition Subscription for 1 year with automatic extension; requirement: Current software version; physical delivery	
• PCS 7 Software Update Service for Engineering AS/OS	**6ES7658-1XX00-0YL8**
• PCS 7 Software Update Service for OS Single Station	**6ES7658-2AX00-0YL8**
• PCS 7 Software Update Service for OS Server	**6ES7658-2BX00-0YL8**
• PCS 7 Software Update Service for OS Client, SFC Visualization	**6ES7658-2CX00-0YL8**
• PCS 7 Software Update Service for Web Server	**6ES7658-2GX00-2YL8**
• PCS 7 Software Update Service for Maintenance Station	**6ES7658-7GX00-0YL8**
• PCS 7 Software Update Service for SIMATIC BATCH Server/Single Station	**6ES7657-0SA00-0YL8**
• PCS 7 Software Update Service for SIMATIC BATCH Client	**6ES7657-0XX00-2YL8**
• PCS 7 Software Update Service for SIMATIC Route Control	**6ES7658-7DX00-0YL8**
Software Update Service for TIA products, Standard Edition (SIMATIC PCS 7 products used in a different context, as well as SIMATIC S7 products used with SIMATIC PCS 7) Subscription for 1 year with automatic extension; requirement: current software version	
• SIMATIC PDM Basic Software Update Service	**6ES7658-3XX01-0YL8**
• SIMATIC PDM Complete Software Update Service	**6ES7658-3XX02-0YL8**
• S7-PLCSIM Software Update Service	**6ES7841-0CA01-0YX2**

	Article No.
SUS Compact Edition	
SIMATIC PCS 7 Software Update Service, Compact Edition Subscription for 1 year with automatic extension; requirement: Current software version; physical delivery	
• PCS 7 Software Update Service for OS Single Station	**6ES7658-2AX00-0YM8**
• PCS 7 Software Update Service for OS Server	**6ES7658-2BX00-0YM8**
• PCS 7 Software Update Service for OS Client, SFC Visualization	**6ES7658-2CX00-0YM8**
• PCS 7 Software Update Service for SIMATIC BATCH Server/Single Station	**6ES7657-0SA00-0YM8**
• PCS 7 Software Update Service for SIMATIC BATCH Client	**6ES7657-0XX00-2YM8**
SUS Download Edition	
SIMATIC PCS 7 Software Update Service, Download Edition Subscription for 1 year with automatic extension; requirement: current software version; delivery form: online Note: Email address required!	
• PCS 7 Software Update Service for Engineering AS/OS	**6ES7658-1XX00-0YV8**
• PCS 7 Software Update Service for OS Single Station	**6ES7658-2AX00-0YV8**
• PCS 7 Software Update Service for OS Server	**6ES7658-2BX00-0YV8**
• PCS 7 Software Update Service for OS Client, SFC Visualization	**6ES7658-2CX00-0YV8**
• PCS 7 Software Update Service for Web Server	**6ES7658-2GX00-2YV8**
• PCS 7 Software Update Service for Maintenance Station	**6ES7658-7GX00-0YV8**
• PCS 7 Software Update Service for SIMATIC BATCH Server/Single Station	**6ES7657-0SA00-0YV8**
• PCS 7 Software Update Service for SIMATIC BATCH Client	**6ES7657-0XX00-2YV8**
• PCS 7 Software Update Service for SIMATIC Route Control	**6ES7658-7DX00-0YV8**
• SIMATIC PDM Basic Software Update Service	**6ES7658-3XX01-0YV8**
• SIMATIC PDM Complete Software Update Service	**6ES7658-3XX02-0YV8**

Overview

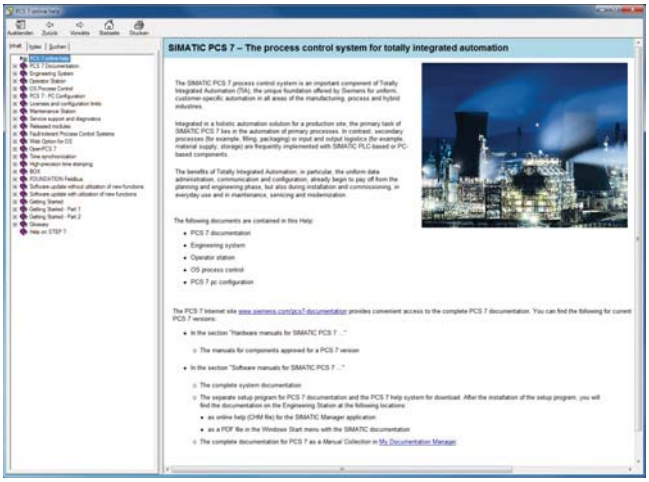

PCS 7 online help is supplied with SIMATIC PCS 7. It can be called using the SIMATIC Manager. The help can be dynamically expanded with add-on help documents.

The complete SIMATIC PCS 7 system documentation is provided as a free-of-charge, multilingual manual collection on the Internet via **My Documentation Manager**.

My Documentation Manager not only enables you to view documents, you can also collect them in your own library and generate your own documents. Information about using these functions as well as FAQs are available in My Documentation Manager.

The SIMATIC PCS 7 system documentation provides both beginners and experienced users with valuable information on all aspects of the process control system. The range extends from the system introduction, covers initial steps and cross-system topics, up to a description of individual system components. With the "Getting Started" documentation you can gain initial practical experience using example projects.

In order to use this, select the manuals for your SIMATIC PCS 7 version on the website for SIMATIC PCS 7 technical documentation:

www.siemens.com/pcs7-documentation

You can open the available SIMATIC PCS 7 manuals directly in the My Documentation Manager, or first start the My Documentation Manager and then select the desired documentation in the integrated Siemens library.

In addition to the SIMATIC PCS 7 system documentation, the Siemens library in the My Documentation Manager provides access to the technical documentation of other products and systems from the SIMATIC range of products.

More information

The "SIMATIC Technical Documentation" site on the Internet directs you straight to the complete range of technical documentation available for SIMATIC products and systems in English, German, French, Italian, Spanish and Chinese. If other languages are available, you can also find them there. You can select individual documents from this range for viewing or downloading.

Additional information is available on the Internet at:

www.siemens.com/simatic-docu

Overview

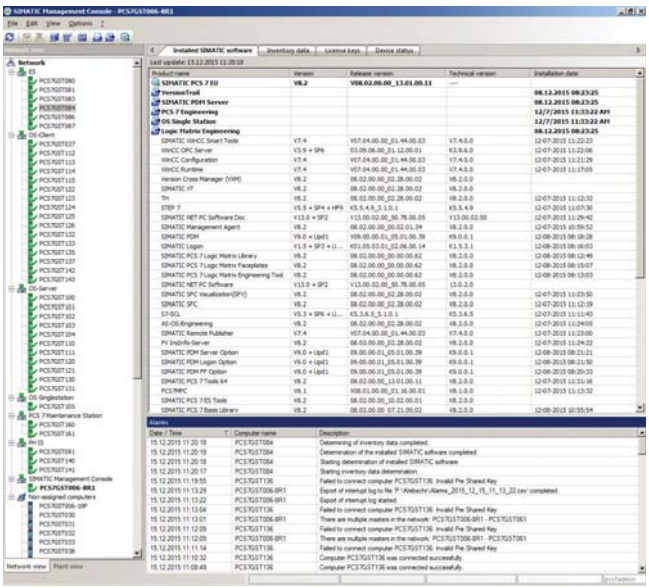

SIMATIC Management Console: Overview of installed software status

A process control system includes numerous heterogeneous components with specific parameters and settings. It is also subject to a dynamic change process due to updates, upgrades as well as modernization measures and expansion. As the plant gets older, it becomes more difficult for you to keep track of the current state of hardware and software. What is more, establishing and maintaining transparency without system support is very time consuming.

The SIMATIC PCS 7 Management Console enables you to reduce the work for managing your SIMATIC PCS 7 plant to a minimum. You also have the latest status of the installed hardware and software components imMediately at hand.

SIMATIC PCS 7 Management Console enables:

- Centralized, standardized administration of SIMATIC PCS 7 software
- Inventory of all installed hardware and software components of the SIMATIC PCS 7 plant

Design

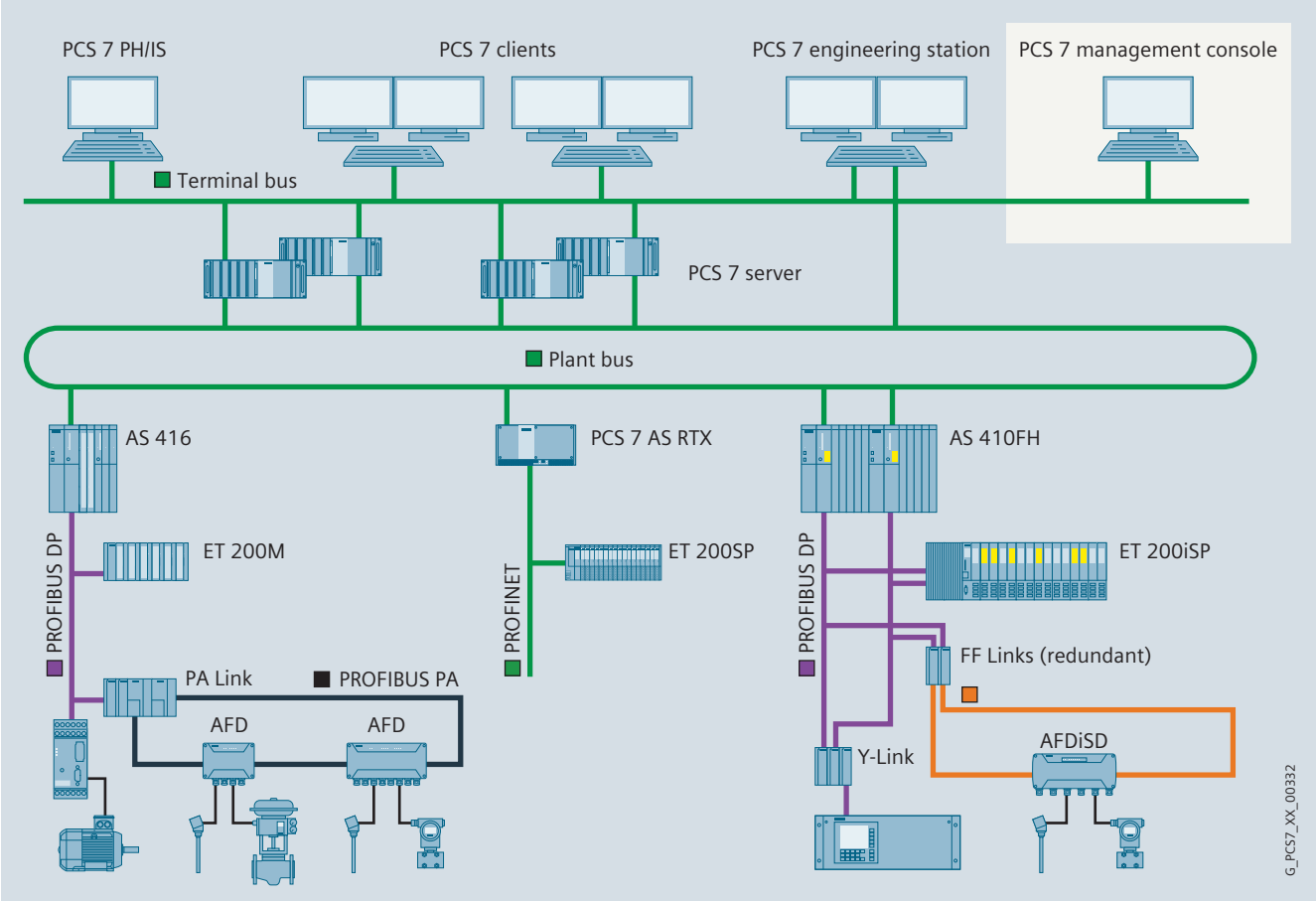

Example of a SIMATIC PCS 7 plant with a stand-alone SIMATIC PCS 7 Management Console

Design (continued)

The SIMATIC PCS 7 Management Console enables you to manage either individual SIMATIC PCS 7 plants or multiple plants of a SIMATIC PCS 7 plant network.

For small and medium-sized SIMATIC PCS 7 plants, the SIMATIC PCS 7 Management Console can be installed and operated on a PCS 7 engineering station.

However, a stand-alone SIMATIC PCS 7 Management Console is typically used for medium-sized and large SIMATIC PCS 7 plant networks. For the single station or server versions of SIMATIC PCS 7 Industrial Workstation that are a suitable as the basic hardware for such a dedicated SIMATIC PCS 7 Management Console, see "SIMATIC Rack PC" in the section "Industrial Workstation/IPC", from page 3/3.

A License Management Console agent is required for each SIMATIC PCS 7 Industrial Workstation managed by the Management Console. The Management Console agents are available in cumulative sets with 10, 50 and 100 licenses.

The secure authentication of communication between the SIMATIC PCS 7 Management Console and the Management Console agents is ensured by the Kerberos protocol.

Function

Central administration of SIMATIC PCS 7 software

The central administration of the software versions of all stations of a SIMATIC PCS 7 system significantly reduces the administrative effort. SIMATIC PCS 7 installations, updates and service packs are subject to administration. In addition to the current SIMATIC PCS 7 software version, upgrades to the current software version are supported. The software can be installed on an individual target station or on multiple target stations in parallel. The installation on the target station does not require active participation of the user. Thanks to the upstream security mechanisms, unintended adverse effects on runtime operation can be prevented.

Setup management

- Provision of SIMATIC PCS 7 installation files on dedicated file servers or combined on the SIMATIC PCS 7 Management Console
- Addition/removal of SIMATIC PCS 7 setups in the central setup management of the SIMATIC PCS 7 Management Console
- Creation of pre-configured setup packages based on plant/user-specific aspects (e.g. OS client package)
- Display and editing of SIMATIC PCS 7 setups and setup packages for preparing for installation
- Rollout of pre-configured setup packages to target stations
  - Addition of software packages during installation
  - Editing of setups or setup packages that are currently not being installed

Status monitoring of the target stations

- Check of target stations for installation readiness by determining and displaying the operating state or role (e.g. OS runtime active/inactive, redundancy mode)
- Implicit, remote disabling of a station in preparation for the start of a SIMATIC PCS 7 update installation
- Status monitoring of the entire SIMATIC PCS 7 installation (e.g. resumption of the installation after restart or network interruption)
- Implicit, remote enabling of a station after completion of a SIMATIC PCS 7 update installation

Function (continued)

SIMATIC PCS 7 system inventory

General inventory taking of installed hardware and software components from a central location offers the following advantages, for example:

- Quick analysis of the installed components as preparation for replacement actions or upgrades
- Simple creation of a detailed inventory report

The SIMATIC PCS 7 system inventory spans all levels of a SIMATIC PCS 7 system (management level, control level, field level). It covers SIMATIC PCS 7 system components in the named levels, e.g. SIMATIC PCS 7 workstations, Industrial Ethernet switches, automation systems (controllers), remote I/Os, links, field devices, drives, etc. For the AS 410 automation systems configured in the SIMATIC PCS 7 system, the number of available and used process objects is also determined in the inventory

SIMATIC PCS 7 system inventory includes:

- Central acquisition of inventory data by reading it from the database of the SIMATIC PCS 7 engineering system or directly from the components
- Generation of an inventory report in Microsoft Excel format
  - Combination of filter results with user-defined categories
  - Colored marking of filtered data
- Creation of a license certificate in the form of a list of installed software licenses

Ordering data

	Article No.
SIMATIC PCS 7 Management Console V8.2	
5 languages (English, German, French, Italian, Spanish), software class A, runs with Windows 7 Ultimate 32/64-bit, Windows Server 2008 R2 Standard 64-bit, Windows Server 2012 R2 Standard 64-bit or Windows 10 Enterprise 2015 LTSB 64-bit, single license for 1 installation	
No SIMATIC PCS 7 Software Media Package	
• Physical delivery License key on USB flash drive, certificate of license	**6ES7658-5BX28-2YB5**
• Online delivery License key download, online certificate of license Note: E-mail address required!	**6ES7658-5BX28-2YH5**
Management Console Agents[1]	
Independent of language, software class A, floating license for 1 user	
No SIMATIC PCS 7 Software Media Package	
• Physical delivery License key on USB flash drive, certificate of license	
- 10 agents	**6ES7658-5BA00-2YB5**
- 50 agents	**6ES7658-5BB00-2YB5**
- 100 agents	**6ES7658-5BC00-2YB5**
• Online delivery License key download, online certificate of license Note: E-mail address required!	
- 10 agents	**6ES7658-5BA00-2YH5**
- 50 agents	**6ES7658-5BB00-2YH5**
- 100 agents	**6ES7658-5BC00-2YH5**

[1] An agent is required for each SIMATIC PCS 7 Industrial Workstation managed by the Management Console.

Overview

We offer a select range of modern and powerful SIMATIC PCS 7 Industrial Workstations for the systems located above the controller level in the SIMATIC PCS 7 system architecture, e.g. for:

- Engineering
- Operating and monitoring (also via Internet/intranet)
- Asset management
- Batch automation
- Route control
- Remote control
- IT applications

SIMATIC PCS 7 Industrial Workstations based on a SIMATIC Rack PC of type IPC547E, IPC647D or IPC 847D are optimized for use as single station, server or client, and can be expanded specific to the system.

As a supplement to these, the SIMATIC Microbox PC in the version SIMATIC PCS 7 OS Client 427/477 as well as the SIMATIC Box PC in the version SIMATIC PCS 7 BOX OS Client 627 (without/with panel front) provide low-cost client alternatives for operator control and monitoring and for batch automation.

Application

Basic hardware for single station/server

SIMATIC PCS 7 Industrial Workstations of type IPC547E, IPC647D or IPC 847D, which are available for use as single station or server, vary in their performance, features, expansion reserves, and length of the product lifecycle. A table compares the essential features of these types in the catalog section "SIMATIC Rack PC, introduction", allowing you to quickly narrow down the search for your specific application. You can then use the detailed technical data in the same catalog section to define this preselection in detail.

Basic hardware for clients

Compared to the more compact client versions, SIMATIC PCS 7 OS Client 427/477 and SIMATIC PCS 7 BOX OS Client 627 (without/with panel front), clients based on a SIMATIC Rack PC have a larger number and greater variety of interfaces. They therefore offer more expansion options and can be used more universally. In multi-monitor mode, you can control up to four process monitors with equivalent quality.

The main advantage of the SIMATIC PCS 7 OS Client 427/477 is their highly compact and rugged design which allows 24/7 maintenance-free operation without fans. These clients are particularly resistant to vibration and shock in the version with solid-state drive (SSD) because there are no rotating storage Media. The SIMATIC PCS 7 OS Client 427 is a computing unit without monitor in a compact metal enclosure. The SIMATIC PCS 7 OS Client 477 was designed as integrated device with a 22" TFT Touch Panel and integrated computing unit. The expansion options for both devices are limited due to their design.

The compact and rugged SIMATIC PCS 7 BOX OS Client 627 with a comparable interface configuration is slightly larger than a client on the basis of the SIMATIC Microbox PC. In return, it is additionally equipped with a DVD drive and two free slots for expansion modules. Furthermore, it can also be ordered as a design version with panel front (22" TFT display with touch screen).

Options

Notes on the use of other basic hardware and non-SIMATIC software

Siemens guarantees the compatibility of hardware and software for system configurations based on components in this catalog.

The system test confirms that the system software of the SIMATIC PCS 7 process control system can be run on the basic hardware offered in this catalog. Despite comprehensive tests, it cannot be excluded that the function of a SIMATIC PCS 7 system could be disturbed or interfered with as a result of additional non-SIMATIC software, i.e. software which has not been explicitly approved for SIMATIC PCS 7.

If you use hardware other than the basic hardware offered in this catalog, or additional non-SIMATIC software, this is at your own risk. If compatibility problems arise as a result of these hardware/software components, the support provided for their elimination is not free of charge.

The licenses for plant bus communication via Industrial Ethernet, i.e. for Basic Communication Ethernet (BCE) and CP 1613/1623/1628 communication (IE) are bound to the SIMATIC PCS 7 Industrial Workstations. Depending on the selected type of communication, the SIMATIC PCS 7 Industrial Workstations for single stations and servers are delivered as standard with a network adapter plus BCE license or a CP 1623 plus SIMATIC NET HARDNET IE S7 communications software.

If you are using SIMATIC PCS 7 V8.2 on other computers (not SIMATIC PCS 7 Industrial Workstations), you also require a SIMATIC PCS 7 BCE V8.2 license (Article No. 6ES7650-1CD28-2YB5 for physical delivery; Article No. 6ES7650-1CD28-2YH5 for online delivery) for all single stations or servers which are connected to the plant bus via a standard network adapter and not via a CP 1623/CP 1613 A2/CP 1628.

Overview

Rack PC family IPC647, IPC847, IPC547

The SIMATIC PCS 7 Industrial Workstation of type IPC547E is an excellent platform for the configuration of single stations, servers or clients. With its all-round capabilities it is ideal for numerous applications in process automation. The more powerful types, IPC647D and IPC847D, are excellent alternatives to meet higher requirements.

Because the basic components such as chipset, processor or memory, are identical, many technical specifications of the IPC647D and IPC847D types of workstations are comparable. The essential differences result from the different overall heights. Since the IPC647D is only half as high as IPC847D, the number and variety of the free slots are reduced. On the other hand, the more compact design requires significantly less space and enables higher packing densities in the control cabinet. This allows the realization of space-saving designs.

The IPC847D is the most powerful and best equipped SIMATIC PCS 7 Industrial Workstation. Its numerous and varied slots provide a great deal of potential for expansion. The IPC847D is predestined for use as a server or single station. Since it would be over-dimensioned as a client, IPC847D is not offered in this version.

Application

Features		SIMATIC PCS 7 Industrial Workstation		
		IPC547E	IPC647D	IPC847D
				
Available SIMATIC PCS 7 pre-installations	V8.2	●	●	●
Available versions	ES/OS Single Station	●	●	●
	OS Server	●	●	●
	OS Client	●	●	–
Height		4 HU	2 HU	4 HU
ECC work memory		–	●	●
Onboard RAID controller	RAID 1 (SATA HDD)	●	●	●
	RAID 1 (SATA SSD)	–	●	●
Hardware RAID controller (PCI x8)	RAID 1 (SAS HDD)	–	●	●
	RAID 5 (SAS HDD)	–	–	●
Hard disks or solid state drives (SSD)	SATA/SAS HDD	●/–	●/●	●/●
	SATA SSD	●	●	●
No. of slots	PCIe x16	2	2 or 4	5
	PCIe x8	1	–	–
	PCIe x4	–	–	3
	PCIe x1	–	–	–
	PCI	4	0 or 2	3
Redundant power supply	with diagnostics	–	●	●
	Without diagnostics	●	–	–
Lifecycle	Marketing	1.5 to 2 years	5 years	5 years
	Spare parts/repair	3 years	5 years	5 years

Application (continued)

Specially optimized versions are available for operation as single stations, servers or clients. The operating system and the following ES/OS software of the SIMATIC PCS 7 process control system are factory installed:

- Single station: PCS 7 Engineering Software for AS/OS (including OS Runtime software)
- Server: PCS 7 OS Software Server
- Client: PCS 7 OS Software Client

You only need the corresponding licenses in order to use the pre-installed SIMATIC PCS 7 software.

Note:

Please note the standard installation if you use the SIMATIC PCS 7 Industrial Workstations within the SIMATIC PCS 7 process control system for other tasks, e.g. as basic hardware for SIMATIC BATCH, SIMATIC Route Control, PCS 7 TeleControl, PCS 7 PowerControl, PCS 7 Process Historian, PCS 7 Information Server or PCS 7 Web Server. You can then expand or discard the existing SIMATIC PCS 7 pre-installation, or restore it using one of the supplied restore DVDs (for details, see section restore DVDs under IPC547E, IPC647D or IPC847D).

Design

Types of plant bus communication

A SIMATIC PCS 7 workstation in the single station or server version can be used in a variety of ways on the Industrial Ethernet plant bus depending on the type and number of automation systems connected:

Interface	Software	for AS communication
Communication module CP 1623/CP 1613 A2/CP 1628	SIMATIC NET HARDNET-IE S7 communication software, licensed for up to four CP 1623/CP 1613 A2/CP 1628 (license for 4 units)	with up to 64 AS single stations (not AS redundant stations)
	SIMATIC NET HARDNET-IE S7-REDCONNECT communication software, licensed for up to four CP 1623/CP 1613 A2/CP 1628 (license for 4 units)	with redundant automation systems (redundant stations)
Ethernet card	BCE (Basic Communication Ethernet) license	with up to 8 AS single stations

The SIMATIC NET HARDNET-IE S7-REDCONNECT PowerPack is suitable for upgrading the SIMATIC NET HARDNET-IE S7 communication software (for ordering data, see section "Communication", section "Industrial Ethernet, System Connection of PCS 7 systems", page 10/47)

The Industrial Ethernet versions of the SIMATIC PCS 7 Industrial Workstation for single stations and servers are equipped as standard with a CP 1623 communication module and SIMATIC NET HARDNET-IE S7 communications software. The BCE license is involved in the BCE versions of the SIMATIC PCS 7 Industrial Workstation.

Upgrade from BCE to CP 1613/1623/1628 communication

OS single stations and OS servers with BCE communication can also be upgraded at a later time for communication with CP 1613/1623/1628. Items required:

- Network card for connecting to Industrial Ethernet:
  - CP 1623 with PCI Express interface or
  - CP 1613 A2 with conventional PCI interface or
  - CP 1628 with PCIexpress interface and additional security functions
- S7 communications software for CP 1613/CP 1623/CP 1628
  - SIMATIC NET HARDNET-IE S7 for communication with AS single stations or
  - SIMATIC NET HARDNET-IE S7-REDCONNECT for communication with AS redundancy stations and AS single stations

For additional information and ordering data for the components mentioned, see section "Communication", section "Industrial Ethernet, System Connection of PCS 7 systems", page 10/47.

Expansion components

The core component of the SIMATIC PCS 7 Industrial Workstation is a SIMATIC industrial PC without mouse, keyboard and monitor. This basic hardware can be expanded further with the following components from this catalog depending on the environment of use and customer requirements:

- Accessories
  - Memory modules
  - Country-specific power supply cable
  - Tower Kit (IPC547E and IPC847D only)
- Expansion components
  - Mouse and keyboard
  - Multi-monitor mode
  - Smart card reader
  - Signal output

Multi-monitor mode is already supported as standard by two optional versions with two or up to four monitors. These can be selected when compiling the SIMATIC PCS 7 Industrial Workstation via selection table or configurator.

Multi-monitor mode can also be installed subsequently. Information on multi-monitor mode as well as the ordering data required for retrofitting can be found in the section "Multi-monitor mode", page 3/51.

Technical specifications

Comparison of the workstation types for SIMATIC PCS 7 V8.2

Type	SIMATIC IPC547E	SIMATIC IPC647D	SIMATIC IPC847D
Design and equipment features			
Design			
19" rack	4 U	2 U	4 U
Ready for telescopic rails?	Yes	Yes	Yes
Horizontal/vertical installation	Yes/Yes	Yes/No	Yes/Yes
19" fixing bracket with handle; dismountable from outside	Yes	Yes	Yes
Tower kit (accessory)	Yes	No	Yes
Degree of protection	IP30 at front (front door closed); IP20 at the rear according to EN 60529	IP41 at front (front door closed); IP20 at the rear according to EN 60529	IP41 at front (front door closed); IP20 at the rear according to EN 60529
Dust protection	With closed front door in conformity with IEC 60529 Filter class G2 EN 779, particles > 0.5 mm are blocked by 99%	With closed front door in conformity with IEC 60529 Filter class G2 EN 779, particles > 0.5 mm are blocked by 99%	With closed front door in conformity with IEC 60529 Filter class G2 EN 779, particles > 0.5 mm are blocked by 99%
Chipset	Intel Q87	Intel C226 (DH82C226 PCH)	Intel C226 (DH82C226 PCH)
CPU			
Processor, clock	• Intel Core i7-4770S (4C/8T; 3.1 (3.9) GHz, 8 MB cache, iAMT) • Intel Core i5-4570S (4C/4T; 2.9 (3.6) GHz, 6 MB cache, iAMT) • Intel Pentium Dual Core G3420 (2C/2T; 3.2 GHz, 3 MB cache)	• Intel Xeon E3-1268L v3, 4 cores, 8 threads, 2.3 (3.3) GHz, GT2, 8 MB cache, Turbo Boost, VT-d, iAMT • Intel Core i5-4570TE, 2 cores, 4 threads, 2.7 (3.3) GHz, GT2, 4 MB cache, Turbo Boost, VT-d, iAMT • Intel Core i3-4330TE, 2 cores, 4 threads, 2.4 GHz, GT2, 4 MB cache	• Intel Xeon E3-1268L v3, 4 cores, 8 threads, 2.3 (3.3) GHz, GT2, 8 MB cache, Turbo Boost, VT-d, iAMT • Intel Core i5-4570TE, 2 cores, 4 threads, 2.7 (3.3) GHz, GT2, 4 MB cache, Turbo Boost, VT-d, iAMT • Intel Core i3-4330TE, 2 cores, 4 threads, 2.4 GHz, GT2, 4 MB cache
Main memory (SDRAM)			
Type	DDR3-1600 SDRAM (PC3-12800)	DDR3-1600 SDRAM (PC3-12800), with or without ECC	DDR3-1600 SDRAM (PC3-12800), with or without ECC
Maximum configuration	4 DIMM memory sockets in total; together up to 32 GB	4 DIMM memory sockets in total; together up to 32 GB	4 DIMM memory sockets in total; together up to 32 GB
Standard configuration	4 GB DDR3-1600 SDRAM (2 × 2.0 GB); dual channel 8 GB DDR3-1600 SDRAM (2 × 4.0 GB); dual channel 16 GB DDR3-1600 SDRAM (2 × 8.0 GB); dual channel 32 GB DDR3-1600 SDRAM (4 × 8.0 GB); dual channel 8 GB or more can be selected for OS server or ES/OS single station 4 GB and more can be selected for OS client	4 GB DDR3 SDRAM (2 × 2.0 GB); dual channel 4 GB DDR3 SDRAM (1 × 4.0 GB); single channel, ECC 8 GB DDR3 SDRAM (2 × 4.0 GB); dual channel (without/with ECC) 16 GB DDR3 SDRAM (2 × 8.0 GB); dual channel (without/with ECC) 32 GB DDR3 SDRAM (4 × 8.0 GB); dual channel (without/with ECC) 8 GB or more can be selected for OS server or ES/OS single station 4 GB and more can be selected for OS client	8 GB DDR3 SDRAM (2 × 4.0 GB); dual channel (without/with ECC) 16 GB DDR3 SDRAM (2 × 8.0 GB); dual channel (without/with ECC) 32 GB DDR3 SDRAM (4 × 8.0 GB); dual channel (without/with ECC) 8 GB or more can be selected for OS server or ES/OS single station
Motherboard slots	Total of 7 slots: 4 × PCI 1 × PCIe x8 (1 lane, Gen 2.0) 1 × PCIe x16 (4 lanes, Gen 2.0) 1 × PCIe x16; Gen 3.0 Modules up to 312 mm in length can be used	Selectable bus modules with total of 4 slots: • 2 × PCIe x16 (8 lanes, Gen 3.0) and 2 × PCI • 1 × PCIe x16 (8 lanes, Gen 3.0), 1 × PCIe x16 (4 lanes, Gen 2.0); 2 × PCIe x16 (4 lanes, Gen 3.0) Modules up to 312 mm in length can be used	Bus module with total of 11 slots: 1 × PCIe x16 (8 lanes, Gen 3.0) 2 × PCIe x16 (4 lanes, Gen 3.0) 2 × PCIe x16 (4 lanes, Gen 2.0) 3 × PCIe x4 (4 lanes, Gen 2.0) 3 × PCI Modules up to 312 mm in length can be used

Technical specifications (continued)

Type	SIMATIC IPC547E	SIMATIC IPC647D	SIMATIC IPC847D
Possible slots for SATA drives			
On the front	Alternative for HDD/SSD: 3 × 5.25", 1 × 5.25" + 3 × slimline removable drive bay 3.5" or 4 × slimline removable drive bay 3.5" 1 × 3.5" (slimline) for DVD burner	2 × slimline removable drive bay 3.5" for HDD/SSD 1 × 3.5" (slimline) for DVD burner	4 × slimline removable drive bay 3.5" for HDD/SSD 1 × 3.5" (slimline) for DVD burner
Indoors	2 × 3.5" for HDD/SSD	2 × 3.5" for HDD (in shock and vibration-damped drive cage; alternative to removable drive bay)	2 × 3.5" for HDD in shock and vibration-damped drive cage 2 × 3.5" for HDD/SSD, integral
RAID controller			
Onboard RAID controller	Intel PCH with Intel Rapid Storage Technology	Intel 8 series SATA RAID controller	Intel 8 series SATA RAID controller
• RAID 1 (SATA HDD)	Yes	Yes	Yes
• RAID 1 (SATA SSD)	No	Yes	Yes
Hardware RAID controller (PCI x8; 2 slots occupied)			
• RAID 1 (SAS HDD)	No	Yes	Yes
• RAID 5 (SAS HDD)	No	No	Yes
Drives			
Hard disk drive (HDD) 3.5", 6 Gbps, NCQ technology			
• ES/OS Single station or OS Server	500 GB or 1 TB SATA	500 GB SATA, 1 TB SATA or 1 TB SAS	500 GB SATA, 1 TB SATA or 1 TB SAS
• OS Client	500 GB or 1 TB SATA	500 GB or 1 TB SATA	500 GB or 1 TB SATA
Solid State Drive (SSD) 2.5"			
• ES/OS Single Station or OS Server	240 GB or 480 GB SATA (eMLC)	240 GB or 480 GB SATA (eMLC)	240 GB or 480 GB SATA (eMLC)
• OS Client	160 GB, 240 GB or 480 GB SATA (eMLC)	160 GB, 240 GB or 480 GB SATA (eMLC)	–
DVD burner	DVD±R/RW 5.25" SATA Slimline Read: • DVD-ROM: single layer 8x, dual layer 6x • DVD-R/+R: single layer 8x, dual layer 6x • DVD-RW/+RW 8x; DVD-RAM 5x • CD-R 24x, CD-RW 24x Write: • DVD+R 8x, DVD+RW 8x, DVD-R 8x, DVD-RW 6x • DVD+R9 (DL) 6x, DVD-R DL 2x • CD-R 24x, CD-RW 24x	DVD±R/RW 5.25" SATA Slimline Read: • DVD-ROM: single layer 8x, dual layer 6x • DVD-R/+R: single layer 8x, dual layer 6x • DVD-RW/+RW 8x; DVD-RAM 5x • CD-R 24x, CD-RW 24x Write: • DVD+R 8x, DVD+RW 8x, DVD-R 8x, DVD-RW 6x • DVD+R9 (DL) 6x, DVD-R DL 2x • CD-R 24x, CD-RW 24x	DVD±R/RW 5.25" SATA Slimline Read: • DVD-ROM: single layer 8x, dual layer 6x • DVD-R/+R: single layer 8x, dual layer 6x • DVD-RW/+RW 8x; DVD-RAM 5x • CD-ROM/CD-R 24x, CD-RW 24x Write: • DVD+R 8x, DVD+RW 8x, DVD-R 8x, DVD-RW 6x • DVD+R (DL) 6x, DVD-R DL 2x • CD-R 24x, CD-RW 24x
Floppy disk drive	No	No	No

Technical specifications (continued)

Type	SIMATIC IPC547E	SIMATIC IPC647D	SIMATIC IPC847D
HDD/SSD configuration	HDD (single station, server or client) • 500 GB or 1 TB HDD SATA internal; 0.2 g vibration, 1 g shock • 500 GB or 1 TB HDD SATA in removable drive bay; at the front • 1 TB RAID 1 internal; 0.2 g vibration, 1 g shock (2 × 1 TB HDD SATA, data mirroring) • 1 TB RAID 1 in removable drive bay; for hot swapping; at the front (2 × 1 TB HDD SATA, data mirroring) • 1 TB RAID 1 (2 × 1 TB HDD SATA, data mirroring) plus 1 TB hot-spare HDD SATA; each in removable drive bay; for hot swapping; at the front SSD • SSD SATA internal: - 240 GB or 480 GB (single station or server) - 160 GB, 240 GB or 480 GB (client) • SSD SATA in removable drive bay; at the front - 240 GB or 480 GB (single station or server) - 160 GB, 240 GB or 480 GB (client) HDD+SSD (single station or server) • 1 TB RAID 1 (2 × 1 TB HDD SATA, data mirroring), for hot swapping plus 240 GB SSD SATA, each in removable drive bay; at the front	HDD (single station, server or client) • 500 GB or 1 TB HDD SATA internal; 0.5 g vibration, 5 g shock • 500 GB or 1 TB HDD SATA in removable drive bay; at the front • 1 TB RAID 1 internal; 0.5 g vibration, 5 g shock (2 × 1 TB HDD SATA, data mirroring) • 1 TB RAID 1 in removable drive bay; for hot swapping; at the front, data mirroring (2 × 1 TB HDD SATA) HDD (single station or server) • 1 TB RAID 1 in removable drive bay; for hot swapping; at the front, data mirroring (2 × 1 TB HDD SAS) SSD • SSD SATA internal: - 240 GB or 480 GB (single station or server) - 160 GB, 240 GB or 480 GB (client) • SSD SATA in removable drive bay; at the front - 240 GB or 480 GB (single station or server) - 160 GB, 240 GB or 480 GB (client) • RAID 1 SSD SATA in removable drive bay; for hot swapping; at the front, data mirroring; (single station or server) - 240 GB (2 × 240 GB) - 480 GB (2 × 480 GB) HDD+SSD (single station or server) • 1 TB RAID 1 internal; 0.5 g vibration, 5 g shock (2 × 1 TB HDD SATA, data mirroring) plus 240 GB SSD SATA, internal, in the DVD drive slot • 1 TB RAID1 in removable drive bay; for hot swapping; at the front, data mirroring (2 × 1 TB HDD SATA or 2 × 1 TB HDD SAS) plus 240 GB SSD SATA, internal, in the DVD drive slot	HDD (single station or server) • 500 GB or 1 TB HDD SATA internal; 0.5 g vibration, 5 g shock • 500 GB or 1 TB HDD SATA in removable drive bay; at the front • 1 TB RAID 1 internal; 0.5 g vibration, 5 g shock (2 × 1 TB HDD SATA, data mirroring) • 1 TB RAID 1 in removable drive bay; for hot swapping; at the front, data mirroring (2 × 1 TB HDD SATA or 2 × 1 TB HDD SAS) • 1 TB RAID 1 (2 × 1 TB HDD SATA, data mirroring) plus 1 TB hot-spare HDD SATA; each in removable drive bay; for hot swapping; at the front • 2 TB RAID 5 in removable drive bay; for hot swapping; at the front, (3 × 1 TB HDD SAS, striping with parity) • 2 TB RAID 5 (3 × 1 TB HDD SAS, striping with parity) plus 1 TB hot-spare HDD SAS; each in removable drive bay; for hot swapping; at the front SSD (single station or server) • 240 GB or 480 GB SSD SATA internal • 240 GB or 480 GB SSD SATA in removable drive bay; at the front • RAID 1 SSD SATA in removable drive bay; for hot swapping; at the front, data mirroring - 240 GB (2 × 240 GB) - 480 GB (2 × 480 GB) HDD+SSD (single station or server) • 1 TB RAID 1 internal; 0.5 g vibration, 5 g shock (2 × 1 TB HDD SATA, data mirroring) plus 240 GB SSD SATA, in removable drive bay, at the front • 1 TB RAID 1 (2 × 1 TB HDD SATA or 2 × 1 TB HDD SAS; data mirroring, for hot swapping) plus 240 GB SSD SATA, each in removable drive bay; at the front • 2 TB RAID 5 (3 × 1 TB HDD SAS, striping with parity, for hot swapping) plus 240 GB SSD SATA, each in removable drive bay; at the front
Graphics card	Onboard Intel graphics controller, integrated in processor; version depends on processor, either HD Graphics 4600 (i7-4770S and i5-4570S) or HD Graphics 4400 (G3420)	Onboard Intel graphics controller HD Graphics P4600/P4700; 2-D and 3-D engine integrated in processor	Onboard Intel graphics controller HD Graphics P4600/P4700; 2-D and 3-D engine integrated in processor
Graphics memory	Dynamic Video Memory Technology (uses between 32 MB and 1.7 GB RAM)	Dynamic Video Memory Technology (uses between 32 MB and 1.7 GB RAM)	Dynamic Video Memory Technology (uses between 32 MB and 1.7 GB RAM)
Resolutions. frequencies, colors	• DVI connection: up to 1 920 × 1 200 at 60 Hz, 32-bit color depth (VGA via adapter cable) • DisplayPort: up to 3 840 × 2 160 at 60 Hz, 32-bit color depth (DVI-D or VGA via adapter cable)	• VGA connection: up to 2 560 × 1 600 at 120 Hz, 32-bit color depth (DVI-I to VGA or DisplayPort to VGA via adapter cable) • DVI connection: up to 2 048 × 1 152 at 60 Hz / 32-bit color depth • DisplayPort: up to 4 096 × 2 160 at 24 Hz / 32-bit color depth	• VGA connection: up to 2 560 × 1 600 at 120 Hz, 32-bit color depth (DVI-I to VGA or DisplayPort to VGA via adapter cable) • DVI connection: up to 2 048 × 1 152 at 60 Hz / 32-bit color depth • DisplayPort: up to 4 096 × 2 160 at 24 Hz / 32-bit color depth

Technical specifications (continued)

Type	SIMATIC IPC547E	SIMATIC IPC647D	SIMATIC IPC847D
Interface modules, interfaces			
Terminal bus interface	2 × Ethernet port (RJ45) 10/100/1000 Mbit/s, teaming-capable, two independent controllers: Intel Clarkville i217LM and Intel Springville i210-AT	2 × Ethernet port (RJ45) 10/100/1000 Mbps, electrically isolated, teaming-capable, two independent controllers: Intel WGI217LM and Intel WGI210IT	2 × Ethernet port (RJ45) 10/100/1000 Mbps, electrically isolated, teaming-capable, two independent controllers: Intel WGI217LM and Intel WGI210IT
Plant bus interface module (single station/server), alternatives • BCE • IE	 Ethernet network card RJ45 10/100/1000 Mbit/s (PCIe x1) CP 1623 communication module (PCIe x1)	 Ethernet network card RJ45 10/100/1000 Mbit/s (PCIe x1) CP 1623 communication module (PCIe x1)	 Ethernet network card RJ45 10/100/1000 Mbit/s (PCIe x1) CP 1623 communication module (PCIe x1)
USB 3.0	4 channels, 500 mA high current, super speed • 2 × at rear • 2 × at front	4 channels, 500 mA high current, super speed • 2 × at rear • 1 × at front • 1 × internal, with mechanical locking, e.g. for USB dongle	4 channels, 500 mA high current, super speed • 2 × at rear • 1 × at front • 1 × internal, with mechanical locking, e.g. for USB dongle
USB 2.0	7 channels, 500 mA high current, high speed • 6 × at rear • 1 × internal, with mechanical locking, e.g. for USB dongle	3 channels, 500 mA high current, high speed • 2 × at rear • 1 × at front	3 channels, 500 mA high current, high speed • 2 × at rear • 1 × at front
Serial (COM)	1 × COM1 (V.24), 9-pin sub-D connector	1 × COM1 (V.24), 9-pin sub-D connector	1 × COM1 (V.24), 9-pin sub-D connector
Parallel (LPT)	No	No	No
Audio	Realtek ALC671, 6-channel DAC support; 1 × Line In; 1 × Micro In; 1 × Line Out (2 W into 4 Ω)	1 × Micro In; 1 × Line Out/headphones (2 × 0.5 W/8 Ω); IDT 92HD81HD	1 × Micro In; 1 × Line Out/headphones (2 × 0.5 W/8 Ω); IDT 92HD81HD
Display port	Yes, 2 ×	Yes, 2 ×	Yes, 2 ×
DVI	1 × DVI-I for digital connection of a monitor	1 × DVI-I for digital connection of a monitor	1 × DVI-I for digital connection of a monitor
Multi-monitor interface	2 monitors: Integral interfaces: 1 × DVI and 1 × DVI via DisplayPort DVI adapter 3 or 4 monitors: Multi-monitor graphics card "4 Screens"	2 monitors: Integral interfaces: 1 × DVI and 1 × DVI via DisplayPort DVI adapter 3 or 4 monitors: Multi-monitor graphics card "4 Screens"	2 monitors: Integral interfaces: 1 × DVI and 1 × DVI via DisplayPort DVI adapter 3 or 4 monitors: Multi-monitor graphics card "4 Screens"
Keyboard	1 × PS/2	1 × PS/2	1 × PS/2
Mouse	1 × PS/2	1 × PS/2	1 × PS/2
Operating systems and diagnostics software			
ES/OS single station/OS client	Windows 7 Ultimate 64-bit, multi-language (German, English, French, Italian, Spanish, Chinese)	Windows 7 Ultimate 64-bit, multi-language (German, English, French, Italian, Spanish, Chinese)	Windows 7 Ultimate 64-bit, multi-language (German, English, French, Italian, Spanish, Chinese)
OS server	Windows Server 2012 R2 Standard 64-bit including 5 CAL, multi-language (German, English, French, Italian, Spanish, Chinese)	Windows Server 2012 R2 Standard 64-bit including 5 CAL, multi-language (German, English, French, Italian, Spanish, Chinese)	Windows Server 2012 R2 Standard 64-bit including 5 CAL, multi-language (German, English, French, Italian, Spanish, Chinese)
System tested SIMATIC Industrial Software	SIMATIC IPC DiagMonitor integrated in pre-installation	SIMATIC IPC DiagMonitor integrated in pre-installation	SIMATIC IPC DiagMonitor integrated in pre-installation

Technical specifications (continued)

Type	SIMATIC IPC547E	SIMATIC IPC647D	SIMATIC IPC847D
Monitoring and diagnostics functions			
Watchdog	• Monitoring of program execution • Monitoring time adjustable in the software • Response to faults can be configured	• Monitoring of program execution • Monitoring time adjustable in the software • Restart can be configured for faults	• Monitoring of program execution • Monitoring time adjustable in the software • Restart can be configured for faults
Temperature	Exceeding the range of permitted operating temperatures	Violation of permissible operating temperature	Violation of permissible operating temperature
Fans	Speed monitoring for • Front fan • Processor fan • Power supply fan	Speed monitoring for • Front fan • Processor fan • Power supply fan	Speed monitoring for • Front fan • Processor fan • Power supply fan
Battery	Two-stage monitoring; service life following first warning at least 1 month	Two-stage monitoring; service life following first warning at least 1 month	Two-stage monitoring; service life following first warning at least 1 month
Drives	SMART messages of hard disks; RAID states "Normal", "Degraded" and "Rebuild"	SMART messages of hard disks; RAID states "Normal", "Degraded" and "Rebuild"	SMART messages of hard disks; RAID states "Normal", "Degraded" and "Rebuild"
Indicators (front LEDs)	• POWER (device switched on) • TEMP (temperature status) • FAN (fan/temperature monitoring) • HDD (hard disk activity) • HDD0/1/2/3 alarm (RAID status messages)	• POWER (device switched on) • HDD (hard disk activity) • ETHERNET 1, ETHERNET 2 (Ethernet status) • WATCHDOG (ready/fault signal) • TEMP (temperature status) • FAN (fan/temperature monitoring) • HDD0/1 ALARM (RAID status messages)	• POWER (device switched on) • ETHERNET 1, ETHERNET 2 (Ethernet status) • WATCHDOG (ready/fault signal) • TEMP (temperature status) • FAN (fan/temperature monitoring) • HDD0/1/2 ALARM (RAID status messages) and HDD | HDD3 ALARM (hard disk activity and RAID status message)
Safety			
Protection class	Protection class I in accordance with IEC 61140	Protection class I in accordance with IEC 61140	Protection class I in accordance with IEC 61140
Safety directives	IEC 60950-1; EN 60950-1; UL 60950-1; CSA C22.2 No. 60950-1-07	IEC 60950-1; EN 60950-1; UL 60950-1; CSA C22.2 No 60950-1-07	IEC 60950-1 EN 60950-1 UL 60950-1 CSA C22.2 No 60950-1-07
Noise emission			
Operation	< 45 dB(A) according to DIN 45635 (40 dB(A) at 20 °C, Windows idle mode)	< 45 dB(A) at 25 °C according to EN ISO 7779 (without DVD drive)	< 55 dB(A) at 25 °C according to EN ISO 7779 (all drives in operation; high CPU loading) < 45 dB(A) at 25 °C according to EN ISO 7779 (without DVD drive; low CPU loading)
Electromagnetic compatibility (EMC)			
Interference emission	EN 61000-6-3; EN 61000-6-4; CISPR 22, EN 55022 Class B; FCC Class A / EN 61000-3-2 Class D; EN 61000-3-3	EN 61000-6-3, FCC Class A; EN 61000-6-4; CISPR 22, EN 55022 Class B; EN 61000-3-2 Class D and EN 61000-3-3	EN 61000-6-3, FCC Class A; EN 61000-6-4; CISPR 22, EN 55022 Class B; EN 61000-3-2 Class D and EN 61000-3-3
Immunity to conducted interference on the supply lines	±2 kV (to IEC 61000-4-4, burst) ±1 kV (to IEC 61000-4-5, symmetrical surge) ±2 kV (to IEC 61000-4-5, asymmetrical surge)	±2 kV (to IEC 61000-4-4; burst) ±1 kV (to IEC 61000-4-5; symmetrical surge) ±2 kV (to IEC 61000-4-5; asymmetrical surge)	±2 kV (to IEC 61000-4-4; burst) ±1 kV (to IEC 61000-4-5; symmetrical surge) ±2 kV (to IEC 61000-4-5; asymmetrical surge)
Immunity to interference on signal lines	±1 kV (to IEC 61000-4-4; burst; length < 30 m) ±2 kV (to IEC 61000-4-4; burst; length > 30 m) ±2 kV (to IEC 61000-4-5; length > 30 m)	±1 kV (to IEC 61000-4-4; burst; length < 30 m) ±2 kV (to IEC 61000-4-4; burst; length > 30 m) ±2 kV (to IEC 61000-4-5; length > 30 m)	±1 kV (to IEC 61000-4-4; burst; length < 30 m) ±2 kV (to IEC 61000-4-4; burst; length > 30 m) ±2 kV (to IEC 61000-4-5; length > 30 m)
Immunity to static discharge	±4 kV contact discharge (according to IEC 61000-4-2) ±8 kV atmospheric discharge (according to IEC 61000-4-2)	±6 kV contact discharge (according to IEC 61000-4-2) ±8 kV atmospheric discharge (according to IEC 61000-4-2)	±6 kV contact discharge (according to IEC 61000-4-2) ±8 kV atmospheric discharge (according to IEC 61000-4-2)

Technical specifications (continued)

Type	SIMATIC IPC547E	SIMATIC IPC647D	SIMATIC IPC847D
Immunity to radio frequency interference	1 V/m, 2 … 2.7 GHz, 80 % AM (to IEC 61000-4-3) 3 V/m, 1.4 … 2 GHz, 80 % AM (to IEC 6100-4-3) 10 V/m, 80 … 1 000 MHz, 80 % AM (to IEC 6100-4-3) 10 V, 150 kHz … 80 MHz, 80 % AM (to IEC 61000-4-6)	3 V/m, 2 … 2.7 GHz, 80 % AM (to IEC 61000-4-3) 10 V/m, 80 … 1 000 MHz and 1.4 … 2 GHz, 80 % AM (to IEC 6100-4-3) 10 V, 10 kHz ... 80 MHz, 80 % AM (to IEC 61000-4-6)	3 V/m, 2 … 2.7 GHz, 80 % AM (to IEC 61000-4-3) 10 V/m, 80 … 1 000 MHz and 1.4 … 2 GHz, 80 % AM (to IEC 6100-4-3) 10 V, 10 kHz ... 80 MHz, 80 % AM (to IEC 61000-4-6)
Magnetic field	30 A/m, 50 Hz/60 Hz (according to IEC 61000-4-8)	100 A/m, 50 Hz/60 Hz (to IEC 61000-4-8)	100 A/m, 50 Hz/60 Hz (to IEC 61000-4-8)
Climatic conditions			
Temperature	Tested according to IEC 60068-2-2, IEC 60068-2-1, IEC 60068-2-14	Tested according to IEC 60068-2-2, IEC 60068-2-1, IEC 60068-2-14	Tested according to IEC 60068-2-2, IEC 60068-2-1, IEC 60068-2-14
• Operation	+5 … +35 °C (without restriction) +5 ... +40 °C (no DVD burner operation) CPU up to 65 W power loss Gradient: max. 10 K/h, no condensation	+5 … +35 °C (without restriction) +5 … +40 °C (with DVD burner)[1)] +5 … +45 °C (without DVD burner)[1)] +5 ... +50 °C (without DVD burner, no HDD operation in removable drive bay)[2)] Gradient: max. 10 °C/h, no condensation [1)] Power dissipation of the expansion modules in total < 55 W [2)] Power dissipation of the expansion modules in total < 30 W	+5 … +35 °C[1)] +5 … +40 °C (with DVD burner)[1)] +5 … +45 °C (without DVD burner)[1)] +5 ... +50 °C (without DVD burner, max. 3 removable drive bays)[2)] Gradient: max. 10 °C/h, no condensation [1)] Power dissipation of the expansion modules in total max. 80 W [2)] Power dissipation of the expansion modules in total < 30 W
• Storage/transport	-20 … +60 °C Gradient: max. 20 K/h, no condensation	-20 … +60 °C Gradient: max. 20 °C/h, no condensation	-20 … +60 °C Gradient: max. 20 °C/h, no condensation
Relative humidity	Tested according to IEC 60068-2-78, IEC 60068-2-30	Tested according to IEC 60068-2-78, IEC 60068-2-30	Tested according to IEC 60068-2-78, IEC 60068-2-30
• Operation	5 … 80 % at 25 °C (no condensation) Gradient: max. 10 K/h, no condensation	5 … 80 % at 25 °C (no condensation) Gradient: max. 10 °C/h, no condensation	5 … 80 % at 25 °C (no condensation) Gradient: max. 10 °C/h, no condensation
• Storage/transport	5 … 95 % at 25 °C (no condensation) Gradient: max. 20 K/h, no condensation	5 … 95 % at 25 °C (no condensation) Gradient: max. 20 °C/h, no condensation	5 … 95 % at 25 °C (no condensation) Gradient: max. 20 °C/h, no condensation
Atmospheric pressure			
• Operation	1080 ... 795 hPa (corresponds to a height of -1 000 ... 2 000 m)	1080 ... 795 hPa (corresponds to a height of -1 000 ... 2 000 m)	1080 ... 795 hPa (corresponds to a height of -1 000 ... 2 000 m)
• Storage/transport	1080 ... 660 hPa (corresponds to a height of -1 000 ... 3 500 m)	1080 ... 660 hPa (corresponds to a height of -1 000 ... 3 500 m)	1080 ... 660 hPa (corresponds to a height of -1 000 ... 3 500 m)
Mechanical environmental conditions			
Vibrations	Tested according to IEC 60068-2-6, 10 cycles	Tested according to IEC 60068-2-6, 10 cycles	Tested according to IEC 60068-2-6, 10 cycles
• Operation	20 … 58 Hz: Amplitude 0.015 mm; 58 ... 200 Hz: 2 m/s² (approx. 0.2 g) Note: No mechanical loads when using hard disks in removable drive bay and during DVD burning process.	10 … 58 Hz: Amplitude 0.0375 mm; 58 ... 500 Hz: 4.9 m/s² (approx. 0.5 g) Note: No mechanical loads when using hard disks in removable drive bay and during DVD burning process.	10 … 58 Hz: Amplitude 0.0375 mm[1)]; 58 ... 500 Hz: 4,9 m/s² (approx. 0.5 g)[1)] Note: No mechanical loads when using hard disks in removable drive bay and during DVD burning process. [1)] With HDD mounting on side panel and assembly of device using telescopic rails max. 0.019 mm at 10 … 58 Hz; max. 3 m/s² at 58 … 500 Hz
• Storage/transport	5 ... 8.51 Hz: Amplitude 3.5 mm; 8.51 ... 500 Hz: 9.8 m/s²	5 … 9 Hz: Amplitude 3.5 mm; 9 … 500 Hz: 9.8 m/s²	5 … 9 Hz: Amplitude 3.5 mm; 9 … 500 Hz: 9.8 m/s²

Technical specifications (continued)

Type	SIMATIC IPC547E	SIMATIC IPC647D	SIMATIC IPC847D
Shock resistance	Tested according to IEC 60068-2-27	Tested according to IEC 60068-2-27, IEC 60068-2-29	Tested according to IEC 60068-2-27, IEC 60068-2-29
• Operation	Half sine: 9.8 m/s², 20 ms (approx. 1 g), 100 shocks per axis Note: No mechanical loads can be tolerated when using hard disks in removable drive bay and during burning process with CD/DVD burners.	Half sine: 50 m/s², 30 ms (approx. 5 g), 100 shocks per axis Note: No mechanical loads when using hard disks in removable drive bay and during DVD burning process.	Half sine: 50 m/s², 30 ms (approx. 5 g), 100 shocks per axis[1)] Note: No mechanical loads when using hard disks in removable drive bay and during DVD burning process. [1)] With HDD mounting on side panel and assembly of device using telescopic rails max. 0.019 mm at 10 … 58 Hz; max. 3 m/s² at 58 … 500 Hz
• Storage/transport	Half sine: 250 m/s², 6 ms, 1 000 shocks per axis	Half sine: 250 m/s², 6 ms, 1000 shocks per axis	Half sine: 250 m/s², 6 ms, 1000 shocks per axis
Approvals, standards			
CE in conformity with 2004/108/EC, 2006/95/EC	Yes	Yes	Yes
Industrial area of application • Interference emission • Noise immunity	 EN 61000-6-4 2007 + A1:2011 EN 61000-6-2:2005	 EN 61000-6-4:2007 + A1:2011 EN 61000-6-2:2005	 EN 61000-6-4:2007 + A1:2011 EN 61000-6-2:2005
Application in apartment, business, trade, small enterprise • Interference emission • Noise immunity	 EN 61000-6-3:2007 + A1:2011 EN 61000-6-1:2007	 EN 61000-6-3:2007 + A1:2011 EN 61000-6-1:2007	 EN 61000-6-3:2007 + A1:2011 EN 61000-6-1:2007
cULus: • 60950-1, File No. E11 5352 • CAN/CSA-C22.2 No. 60950-1-07 (I.T.E.)	Yes	Yes	Yes
USA: FCC Rules, Part 15, Class A	Yes	Yes	Yes
Canada: ICES-003, Class B; NMB-003, Class B	Yes	Yes	Yes
Australia: EN 61000-6-3:2007	Yes	Yes	Yes
Korea: Korean Certification (KC Mark)	Yes	Yes	Yes
Special features			
Quality assurance according to ISO 9001:2008	Yes	Yes	Yes
Power supply			
Nominal supply voltage (U_N)	Single power supply unit: • 100 ... 240 V AC (-15 %; +10 %) Redundant power supply unit: • 2 × 100 … 240 V AC (-15 %; +10 %)	Single power supply unit: • 100 … 240 V AC (-15 %; +10 %) Redundant power supply unit: • 2 × 100 … 240 V AC (-15 %; +10 %)	Single power supply unit: • 100 … 240 V AC (-15 %; +10 %) Redundant power supply unit: • 2 × 100 … 240 V AC (-15 %; +10 %)
Frequency	50 ... 60 Hz (min. 47 Hz, max. 63 Hz, sinusoidal)	50 ... 60 Hz (min. 47 Hz, max. 63 Hz, sinusoidal)	50 ... 60 Hz (min. 47 Hz, max. 63 Hz, sinusoidal)
Short-term voltage dip	20 ms at 93 V (max. 10 events per hour; recovery time of at least 1 s)	20 ms at 93 V (max. 10 events per hour; recovery time of at least 1 s)	20 ms at 93 V (max. 10 events per hour; recovery time of at least 1 s)
Power consumption at 230 W secondary (maximum configuration)	290 W max. at 80 % efficiency with single or redundant power supply unit	240 W max. at 80 % efficiency with single or redundant power supply unit	270 W max. at 80 % efficiency with single power supply unit 300 W max. at 70 % efficiency with redundant power supply unit
AC input current	• Continuous current up to 6 A at 100 V; up to 3 A at 240 V • Up to 80 A for 3.6 ms during startup with single power supply unit • Up to 210 A per module for 1.65 ms during startup with redundant power supply unit	• Continuous current up to 6 A • Up to 30 A for 5 ms during startup	• Continuous current up to 7 A • Up to 30 A for 5 ms during startup
Max. current output (DC)	• +5 V: 26 A; +3.3 V: 24 A (in total up to 190 W) • +12 V: 15 A; +12 V: 15 A • -12 V: 0.2 A • +5 V_{aux}: 2 A Total sum of all voltages max. 230 W	• +5 V: 30 A; +3.3 V: 28 A (in total up to 160 W) • +12 V: 15 A • -12 V: 0.5 A • -5 V: 0.5 A • +5 V_{aux}: 2 A Total sum of all voltages max. 190 W	• +5 V: 26 A; +3.3 V: 24 A (in total up to 190 W) • +12 V: 15 A; +12 V: 15 A • -12 V: 0.2 A • +5 V_{aux}: 2 A Total sum of all voltages max. 210 W
Dimensions and weights			
Installation dimensions (W × H × D) in mm	433.5 × 176.5 × 445.5	430.4 × 88.1 × 444.6	430.4 × 177.4 × 444.4
Weight	15 … 23 kg	10 … 14 kg	16 … 23 kg

Overview

SIMATIC Rack PC IPC547E

The SIMATIC PCS 7 Industrial Workstations based on a SIMATIC Rack PC of type IPC547E are UL-certified and have the CE mark for use in industry as well as residential, business and commercial environments. With their innovative Intel PC architecture of 19" rack design, their high availability, flexibility and service friendliness they are highly suitable for the specific requirements associated with process control technology.

Design

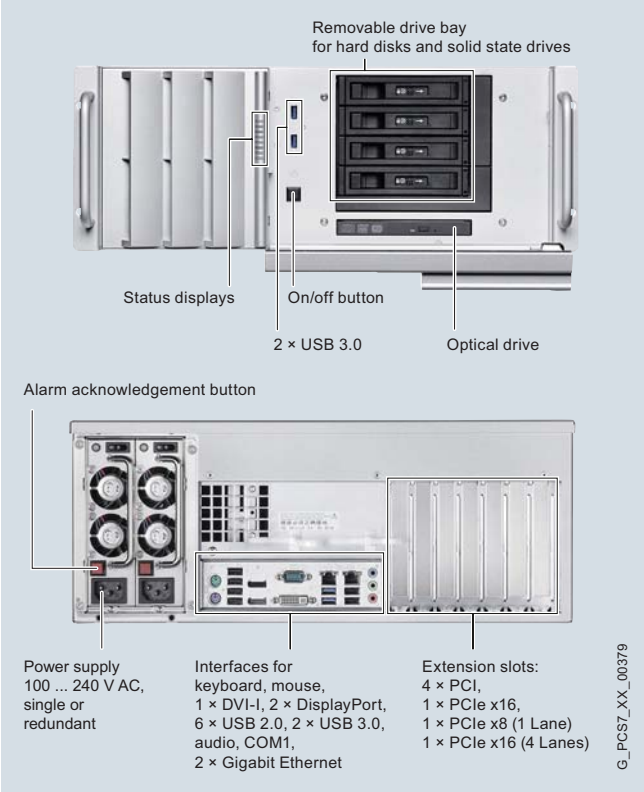

SIMATIC IPC547E, front with open front door (top) and rear

The SIMATIC PCS 7 Industrial Workstations of type IPC547E have an all-metal enclosure in 19" rack design (4 Us), which is particularly protected against dust by a filter and pressurized ventilation. This mechanically and electromechanically rugged enclosure has a service-friendly design. The SIMATIC PCS 7 Industrial Workstations of type IPC547E can be positioned and installed horizontally or vertically. Using an optional tower kit, the Rack PC can be converted into an industry tower. The compact dimensions also allow space-saving assembly in 500-mm deep 19" control cabinets.

The SIMATIC PCS 7 Industrial Workstations of type IPC547E are suitable for reliable 24-hour continuous operation at ambient temperatures between 5 and 40 °C. Shocks up to 1 g and vibrations up to 0.2 g can be tolerated during operation.

Further essential features

Powerful technology with modern processors and graphic controllers

- Motherboard based on the Intel chipset Q87
- Main memory expansion with 4 to 32 GB (client) or 8 to 32 GB (server/single station) DDR3-1600 SDRAM, without ECC (in dual-channel mode for optimum performance)
- Powerful and energy-saving Intel multi-core processors: i7, i5, or Pentium Dual Core
- Powerful Intel graphics controller onboard, integrated in the processor
  - Either HD Graphics 4600 (i7 and i5) or HD Graphics 4400 (Pentium Dual Core) version depending on the type of processor
  - 2 digital interfaces: DVI-I and DisplayPort (DVI-D via DisplayPort DVI adapter)
  - Analog VGA connection via DVI-I adapter to VGA or DisplayPort to VGA
- Optional graphics expansion for multi-monitor mode with up to 4 process monitors (up to 2 process monitors on the onboard graphics controller)
- Optimization to maximum performance with 160/240/480 GB solid-state drive

Design (continued)

Expansion options and interfaces

- 2 × 10/100/1000 Mbit/s Ethernet RJ45 port integrated onboard
- Numerous slots for PCI/PCI-Express expansion modules (all for modules up to 312 mm in length)
  - 4 × PCI
  - 1 × PCIe x8 (1 lane)
  - 1 × PCIe x16
  - 1 × PCIe x16 (4 lanes)
- Total of 4 USB 3.0 ports
  - 2 on the rear of the device
  - 2 on the front
- Total of 7 USB 2.0 ports
  - 6 on the rear of the device
  - 1 internal, e.g. for software license dongle ASIA
- Serial COM interface (1 × COM1)
- Further interfaces at the rear of the device:
  - 2 × PS/2 for mouse and keyboard
  - Audio (1 × Line In, 1 × Line Out, 1 × Micro In)
- Connections for SATA drives, occupied in accordance with preconfigured features:
  - HDD/SSD in slimline removable drive bay (up to 4) or in the 5.25" slot (at the front)
  - 1 slimline DVD burner (at the front)
  - Up to 2 HDD/SSD 3.5"/2.5" in the internal drive cage
- Slots for drives (occupied in accordance with configuration):
  - 3 slots 5.25" (at the front) for accommodating 4 slimline removable drive bays for HDD/SSD
  - 1 slot 3.5" (at the front) for slimline DVD burner
  - 2 slots 3.5" (internal)

High system availability

- High-quality components with high MTBF values
- RAID1 configuration for data mirroring on 2 SATA hard disks (also in hot swap drive bay for replacement of a hard disk during operation)
- Faulty hard disk in a RAID configuration can be quickly identified via the HDD alarm LED
- RAID configuration optionally with hot-spare hard disk (reserve) for automatically taking over the function of a faulty hard disk
- Redundant 100 to 240 V AC power supply with hot swap functionality as a design variation
- Lockable front door provides access protection for removable Media, USB ports, operator controls (on/off button), fan, and air filter on the front
- Diagnostics and monitoring functions for temperature, fan, and program execution (watchdog) as well as for battery and drives
- LEDs on front for power, hard disk activity, and status of RAID, temperature and fans

Integration in SIMATIC PCS 7 system diagnostics

- Can be integrated into the system diagnostics with the SIMATIC PCS 7 Maintenance Station by means of the SIMATIC IPC DiagMonitor diagnostics software for monitoring the program execution (watchdog), temperature, fan speed, hard disk status and system failure

Practical and service-friendly design for industrial use

- High EMC
- Degree of protection at front: IP30 (with front door closed), at rear: IP20
- Dust protection through fan-controlled pressurized cooling via filter
- Filter can be replaced without tools
- Special hard disk holders and card retainers for protection against vibration and shock
- Fast replacement of hard disks by means of hot-swap frame (configuration option)
- Simple cabinet assembly possible using telescopic rails

High investment protection

- System-tested with SIMATIC PCS 7
- Marketing period 1.5 to 2 years, supply with replacement parts/repairs over 3 years
- Support for legacy interfaces (PS/2, COM)
- Certification for worldwide marketing (cULus)
- Installation compatible across device generations
- Worldwide service and support

Design (continued)

Restore DVD

The operating system and the SIMATIC PCS 7 software are already preinstalled on the SIMATIC PCS 7 Industrial Workstations. The supplied restore DVDs permit fast restoring of the delivered status or a new installation for a different application.

The following table shows you the contents of the supplied restore DVDs and the preinstalled software for each version of the SIMATIC PCS 7 Industrial Workstation.

SIMATIC PCS 7 V8.2 Industrial Workstation	Included Restore DVDs	Preinstalled on delivery
Single station		
SIMATIC PCS 7 ES/OS IPC547E (IE or BCE)	Restore DVD 1: Windows 7 Ultimate 64-bit operating system with default settings for optimized SIMATIC PCS 7 operation	–
	Restore DVD 2: Windows 7 Ultimate 64-bit operating system plus software installation for operation as ES/OS single station	●
Server		
SIMATIC PCS 7 OS Server IPC547E (IE or BCE)	Restore DVD 1: Windows Server 2012 R2 64-bit operating system with default settings for optimized SIMATIC PCS 7 operation	–
	Restore DVD 2: Windows Server 2012 R2 64-bit operating system plus software installation for operation as OS Server	●
Client		
SIMATIC PCS 7 OS Client IPC547E	Restore DVD 1: Windows 7 Ultimate 64-bit operating system with default settings for optimized SIMATIC PCS 7 operation	–
	Restore DVD 2: Windows 7 Ultimate 64-bit operating system plus software installation for operation as OS client	●

Individual configuration of SIMATIC PCS 7 Industrial Workstations

By selecting predefined equipment features, you can individually configure the SIMATIC PCS 7 Industrial Workstation and thus also its article number. Selection tables for single station, server and client are available for this in the "Ordering data" (paper catalog) section. A further selection table enables you to order complete SIMATIC PCS 7 Industrial Workstations as replacement parts.

The "PCS 7 INDUSTRIAL WORKSTATION IPC547E" configurator in the Industry Mall allows you to interactively select and order the SIMATIC PCS 7 Industrial Workstation in the single station, server or client version - directly for your system or as a replacement part.

Individually configured SIMATIC PCS 7 Industrial Workstations will be built to order. Therefore the average delivery time for such an order is 15 working days.

Technical specifications

Detailed technical specifications for the SIMATIC PCS 7 Industrial Workstation of type IPC547E is available under "Comparison of the workstation types" in the catalog section "SIMATIC Rack PC, Introduction", page 3/5.

Ordering data

Individually configurable SIMATIC PCS 7 Industrial Workstations IPC547E

	Article No.									
SIMATIC PCS 7 Industrial Workstation for ES/OS single station	**6ES7660-**									
SIMATIC IPC547E industrial PC	**4**	■	■	■	■	**-**	**2**	**A**	■	■
Windows 7 Ultimate 64-bit operating system, multi-language (English, German, French, Italian, Spanish, Chinese), and SIMATIC PCS 7 V8.2 pre-installed										
Processor and system type										
• Pentium Dual Core G3420 (2C/2T, 3.30 GHz, 3 MB cache), ES/OS single station		**A**								
• Core i5-4570S (4C/4T, 2.90 (3.60) GHz, 6 MB cache, iAMT), ES/OS single station		**D**								
• Core i7-4770S (4C/8T, 3.10 (3.90) GHz, 8 MB cache, iAMT), ES/OS single station		**G**								
Hard disks and solid-state drives										
with SATA hard disk (HDD)										
• 500 GB HDD SATA, 0.2 g vibration, 1 g shock; internal			**A**							
• 1 TB HDD SATA, 0.2 g vibration, 1 g shock; internal			**B**							
• RAID 1, 1 TB (2 × 1 TB HDD SATA, data mirroring); 0.2 g vibration, 1 g shock; internal			**C**							
• 500 GB HDD SATA in removable drive bay; at the front			**D**							
• 1 TB HDD SATA in removable drive bay, at the front			**E**							
• RAID 1, 1 TB (2 × 1 TB HDD SATA, data mirroring); in removable drive bay, for hot swapping; at the front			**F**							
• RAID 1, 1 TB (2 x 1 TB HDD SATA, data mirroring) + 1 TB HDD SATA as hot spare; in removable drive bay, for hot swapping; at the front			**G**							
HDD SATA + SSD										
• RAID 1, 1 TB (2 × 1 TB HDD SATA, data mirroring), in removable drive bay, for hot swapping; at the front + 240 GB SSD (eMLC) SATA, in removable drive bay; at the front			**J**							
SSD										
• 240 GB SSD (eMLC) SATA; internal			**L**							
• 480 GB SSD (eMLC) SATA; internal			**M**							
• 240 GB SSD (eMLC) SATA, in removable drive bay; at the front			**P**							
• 480 GB SSD (eMLC) SATA, in removable drive bay; at the front			**Q**							
Main memory										
• 8 GB DDR3 SDRAM (2 × 4 GB), dual channel				**1**						
• 16 GB DDR3 SDRAM (2 × 8 GB), dual channel				**2**						
• 32 GB DDR3 SDRAM (4 × 8 GB), dual channel				**3**						
Communication with plant bus										
• BCE					**0**					
• Industrial Ethernet (CP 1623)					**1**					
• Without additional communication modules					**8**					

	Article No.									
SIMATIC PCS 7 Industrial Workstation for ES/OS single station	**6ES7660-**									
SIMATIC IPC547E industrial PC	**4**	■	■	■	■	**-**	**2**	**A**	■	■
Windows 7 Ultimate 64-bit operating system, multi-language (English, German, French, Italian, Spanish, Chinese), and SIMATIC PCS 7 V8.2 pre-installed										
Enclosure type/swap Media/ multi-monitor option										
Unpainted enclosure										
• Without optical drive										
- Without multi-monitor mode									**A**	
- Multi-monitor mode for 2 screens[1]									**B**	
- Multi-monitor mode for 4 screens[2]									**C**	
• With DVD±RW (slim)										
- Without multi-monitor mode									**D**	
- Multi-monitor mode for 2 screens[1]									**E**	
- Multi-monitor mode for 4 screens[2]									**F**	
Painted enclosure										
• Without optical drive										
- Without multi-monitor mode									**G**	
- Multi-monitor mode for 2 screens[1]									**H**	
- Multi-monitor mode for 4 screens[2]									**J**	
• With DVD±RW (slim)										
- Without multi-monitor mode									**K**	
- Multi-monitor mode for 2 screens[1]									**L**	
- Multi-monitor mode for 4 screens[2]									**M**	
Power supply unit, country-specific version										
• 100 ... 240 V AC industrial power supply to NAMUR										
- Power cord for Europe										**0**
- Power cord for the UK										**1**
- Power cord for Switzerland										**2**
- Power cord for the USA										**3**
- Power cord for Italy										**4**
- Power cord for China										**5**
• 2 × 100 ... 240 V AC, redundant power supply; without power supply cord										**6**

[1] Incl. 1 adapter cable (DisplayPort to DVI-D)

[2] Incl. PCIe x16 graphics card

Ordering data (continued)

	Article No.									
SIMATIC PCS 7 Industrial Workstation for OS server	**6ES7660-**									
SIMATIC IPC547E industrial PC	**4**	■	■	■	■	**-**	**2**	**E**	■	■
Windows Server 2012 R2 Standard Edition operating system, 64-bit, incl. 5 CAL, multi-language (English, German, French, Italian, Spanish, Chinese), and SIMATIC PCS 7 V8.2 preinstalled										
Processor and system type										
• Pentium Dual Core G3420 (2C/2T, 3.30 GHz, 3 MB cache), OS server		**B**								
• Core i5-4570S (4C/4T, 2.90 (3.60) GHz, 6 MB cache, iAMT), OS server		**E**								
• Core i7-4770S (4C/8T, 3.10 (3.90) GHz, 8 MB cache, iAMT), OS server		**H**								
Hard disks and solid-state drives										
with SATA hard disk (HDD)										
• 500 GB HDD SATA, 0.2 g vibration, 1 g shock; internal			**A**							
• 1 TB HDD SATA, 0.2 g vibration, 1 g shock; internal			**B**							
• RAID 1, 1 TB (2 × 1 TB HDD SATA, data mirroring); 0.2 g vibration, 1 g shock; internal			**C**							
• 500 GB HDD SATA in removable drive bay; at the front			**D**							
• 1 TB HDD SATA in removable drive bay, at the front			**E**							
• RAID 1, 1 TB (2 × 1 TB HDD SATA, data mirroring); in removable drive bay, for hot swapping; at the front			**F**							
• RAID 1, 1 TB (2 x 1 TB HDD SATA, data mirroring) + 1 TB HDD SATA as hot spare; in removable drive bay, for hot swapping; at the front			**G**							
HDD SATA + SSD										
• RAID 1, 1 TB (2 × 1 TB HDD SATA, data mirroring), in removable drive bay, for hot swapping; at the front + 240 GB SSD (eMLC) SATA, in removable drive bay; at the front			**J**							
SSD										
• 240 GB SSD (eMLC) SATA; internal			**L**							
• 480 GB SSD (eMLC) SATA; internal			**M**							
• 240 GB SSD (eMLC) SATA, in removable drive bay; at the front			**P**							
• 480 GB SSD (eMLC) SATA, in removable drive bay; at the front			**Q**							
Main memory										
• 8 GB DDR3 SDRAM (2 × 4 GB), dual channel				**1**						
• 16 GB DDR3 SDRAM (2 × 8 GB), dual channel				**2**						
• 32 GB DDR3 SDRAM (4 × 8 GB), dual channel				**3**						
Communication with plant bus										
• BCE					**0**					
• Industrial Ethernet (CP 1623)					**1**					
• Without additional communication modules					**8**					

	Article No.									
SIMATIC PCS 7 Industrial Workstation for OS server	**6ES7660-**									
SIMATIC IPC547E industrial PC	**4**	■	■	■	■	**-**	**2**	**E**	■	■
Windows Server 2012 R2 Standard Edition operating system, 64-bit, incl. 5 CAL, multi-language (English, German, French, Italian, Spanish, Chinese), and SIMATIC PCS 7 V8.2 preinstalled										
Enclosure type/swap Media/ multi-monitor option										
Unpainted enclosure										
• Without optical drive										
- Without multi-monitor mode									**A**	
- Multi-monitor mode for 2 screens[1]									**B**	
- Multi-monitor mode for 4 screens[2]									**C**	
• With DVD±RW (slim)										
- Without multi-monitor mode									**D**	
- Multi-monitor mode for 2 screens[1]									**E**	
- Multi-monitor mode for 4 screens[2]									**F**	
Painted enclosure										
• Without optical drive										
- Without multi-monitor mode									**G**	
- Multi-monitor mode for 2 screens[1]									**H**	
- Multi-monitor mode for 4 screens[2]									**J**	
• With DVD±RW (slim)										
- Without multi-monitor mode									**K**	
- Multi-monitor mode for 2 screens[1]									**L**	
- Multi-monitor mode for 4 screens[2]									**M**	
Power supply unit, country-specific version										
• 100 ... 240 V AC industrial power supply to NAMUR										
- Power cord for Europe										**0**
- Power cord for the UK										**1**
- Power cord for Switzerland										**2**
- Power cord for the USA										**3**
- Power cord for Italy										**4**
- Power cord for China										**5**
• 2 × 100 ... 240 V AC, redundant power supply; without power supply cord										**6**

[1] Incl. 1 adapter cable (DisplayPort to DVI-D)

[2] Incl. PCIe x16 graphics card

Ordering data (continued)

	Article No.									
SIMATIC PCS 7 Industrial Workstation for OS client	**6ES7660-**									
SIMATIC IPC547E industrial PC	4	■	■	■	■	-	2	A	■	■
Windows 7 Ultimate 64-bit operating system, multi-language (English, German, French, Italian, Spanish, Chinese), and SIMATIC PCS 7 V8.2 pre-installed										
Processor and system type										
• Pentium Dual Core G3420 (2C/2T, 3.30 GHz, 3 MB cache), OS client		C								
• Core i5-4570S (4C/4T, 2.90 (3.60) GHz, 6 MB cache, iAMT), OS client		F								
• Core i7-4770S (4C/8T, 3.10 (3.90) GHz, 8 MB cache, iAMT), OS client		J								
Hard disks and solid-state drives										
with SATA hard disk (HDD)										
• 500 GB HDD SATA, 0.2 g vibration, 1 g shock; internal			A							
• 1 TB HDD SATA, 0.2 g vibration, 1 g shock; internal			B							
• RAID 1, 1 TB (2 × 1 TB HDD SATA, data mirroring); 0.2 g vibration, 1 g shock; internal			C							
• 500 GB HDD SATA in removable drive bay; at the front			D							
• 1 TB HDD SATA in removable drive bay, at the front			E							
• RAID 1, 1 TB (2 × 1 TB HDD SATA, data mirroring); in removable drive bay, for hot swapping; at the front			F							
• RAID 1, 1 TB (2 x 1 TB HDD SATA, data mirroring) + 1 TB HDD SATA as hot spare; in removable drive bay, for hot swapping; at the front			G							
SSD										
• 240 GB SSD (eMLC) SATA; internal			L							
• 480 GB SSD (eMLC) SATA; internal			M							
• 240 GB SSD (eMLC) SATA, in removable drive bay; at the front			P							
• 480 GB SSD (eMLC) SATA, in removable drive bay; at the front			Q							
Main memory										
• 4 GB DDR3 SDRAM (2 × 2 GB), dual channel				0						
• 8 GB DDR3 SDRAM (2 × 4 GB), dual channel				1						
• 16 GB DDR3 SDRAM (2 × 8 GB), dual channel				2						
• 32 GB DDR3 SDRAM (4 × 8 GB), dual channel				3						
Communication with plant bus										
• Without additional communication modules					8					

	Article No.									
SIMATIC PCS 7 Industrial Workstation for OS client	**6ES7660-**									
SIMATIC IPC547E industrial PC	4	■	■	■	■	-	2	A	■	■
Windows 7 Ultimate 64-bit operating system, multi-language (English, German, French, Italian, Spanish, Chinese), and SIMATIC PCS 7 V8.2 pre-installed										
Enclosure type/swap Media/ multi-monitor option										
Unpainted enclosure										
• Without optical drive										
- Without multi-monitor mode									A	
- Multi-monitor mode for 2 screens[1]									B	
- Multi-monitor mode for 4 screens[2]									C	
• With DVD±RW (slim)										
- Without multi-monitor mode									D	
- Multi-monitor mode for 2 screens[1]									E	
- Multi-monitor mode for 4 screens[2]									F	
Painted enclosure										
• Without optical drive										
- Without multi-monitor mode									G	
- Multi-monitor mode for 2 screens[1]									H	
- Multi-monitor mode for 4 screens[2]									J	
• With DVD±RW (slim)										
- Without multi-monitor mode									K	
- Multi-monitor mode for 2 screens[1]									L	
- Multi-monitor mode for 4 screens[2]									M	
Power supply unit, country-specific version										
• 100 ... 240 V AC industrial power supply to NAMUR										
- Power cord for Europe										0
- Power cord for the UK										1
- Power cord for Switzerland										2
- Power cord for the USA										3
- Power cord for Italy										4
- Power cord for China										5
• 2 × 100 ... 240 V AC, redundant power supply; without power supply cord										6

[1] Incl. 1 adapter cable (DisplayPort to DVI-D)

[2] Incl. PCIe x16 graphics card

Ordering data (continued)

SIMATIC PCS 7 Industrial Workstations of type IPC547E as replacement part

Without hardware expansions, software pre-installation, system software licenses, restore DVDs

Replacement for ES/OS single station, OS server, or OS client of type IPC547E

	Article No.									
SIMATIC PCS 7 Industrial Workstation as replacement part	**6ES7660-**									
SIMATIC IPC547E industrial PC	4	■	■	■	■	-	8	■	■	■
Without SIMATIC PCS 7 restore DVDs, without pre-installation										
Processor and system type										
• Pentium Dual Core G3420 (2C/2T, 3.30 GHz, 3 MB cache), replacement part		W								
• Core i5-4570S (4C/4T, 2.90 (3.60) GHz, 6 MB cache, iAMT), replacement part		X								
• Core i7-4770S (4C/8T, 3.10 (3.90) GHz, 8 MB cache, iAMT), replacement part		Y								
Hard disks and solid-state drives										
with SATA hard disk (HDD)										
• 500 GB HDD SATA, 0.2 g vibration, 1 g shock; internal			A							
• 1 TB HDD SATA, 0.2 g vibration, 1 g shock; internal			B							
• RAID 1, 1 TB (2 × 1 TB HDD SATA, data mirroring); 0.2 g vibration, 1 g shock; internal			C							
• 500 GB HDD SATA in removable drive bay; at the front			D							
• 1 TB HDD SATA in removable drive bay, at the front			E							
• RAID 1, 1 TB (2 × 1 TB HDD SATA, data mirroring); in removable drive bay, for hot swapping; at the front			F							
• RAID 1, 1 TB (2 x 1 TB HDD SATA, data mirroring) + 1 TB HDD SATA as hot spare; in removable drive bay, for hot swapping; at the front			G							
HDD SATA + SSD										
• RAID 1, 1 TB (2 × 1 TB HDD SATA, data mirroring), in removable drive bay, for hot swapping; at the front + 240 GB SSD (eMLC) SATA, in removable drive bay; at the front			J							
SSD										
• 240 GB SSD (eMLC) SATA; internal			L							
• 480 GB SSD (eMLC) SATA; internal			M							
• 240 GB SSD (eMLC) SATA, in removable drive bay; at the front			P							
• 480 GB SSD (eMLC) SATA, in removable drive bay; at the front			Q							
Main memory										
• 4 GB DDR3 SDRAM (2 × 2 GB), dual channel				0						
• 8 GB DDR3 SDRAM (2 × 4 GB), dual channel				1						
• 16 GB DDR3 SDRAM (2 × 8 GB), dual channel				2						
• 32 GB DDR3 SDRAM (4 × 8 GB), dual channel				3						
Communication with plant bus										
• BCE					0					
• Industrial Ethernet (CP 1623)					1					
• Without additional communication modules					8					

	Article No.									
SIMATIC PCS 7 Industrial Workstation as replacement part	**6ES7660-**									
SIMATIC IPC547E industrial PC	4	■	■	■	■	-	8	■	■	■
Without SIMATIC PCS 7 restore DVDs, without pre-installation										
Operating system										
• Windows 7 Ultimate, 64-bit, multi-language (English, German, French, Italian, Spanish, Chinese)							A			
• Windows Server 2008 R2 Standard Edition, 64-bit, incl. 5 CAL, multi-language (English, German, French, Italian, Spanish, Chinese)							D			
• Windows Server 2012 R2 Standard Edition, 64-bit, incl. 5 CAL, multi-language (English, German, French, Italian, Spanish, Chinese)							E			
• Without operating system							X			
Enclosure type/swap Media/ multi-monitor option										
Unpainted enclosure										
• Without optical drive										
- Without multi-monitor mode									A	
- Multi-monitor mode for 2 screens[1]									B	
- Multi-monitor mode for 4 screens[2]									C	
• With DVD±RW (slim)										
- Without multi-monitor mode									D	
- Multi-monitor mode for 2 screens[1]									E	
- Multi-monitor mode for 4 screens[2]									F	
Painted enclosure										
• Without optical drive										
- Without multi-monitor mode									G	
- Multi-monitor mode for 2 screens[1]									H	
- Multi-monitor mode for 4 screens[2]									J	
• With DVD±RW (slim)										
- Without multi-monitor mode									K	
- Multi-monitor mode for 2 screens[1]									L	
- Multi-monitor mode for 4 screens[2]									M	
Power supply unit, country-specific version										
• 100 ... 240 V AC industrial power supply to NAMUR										
- Power cord for Europe										0
- Power cord for the UK										1
- Power cord for Switzerland										2
- Power cord for the USA										3
- Power cord for Italy										4
- Power cord for China										5
• 2 × 100 ... 240 V AC, redundant power supply; without power supply cord										6

[1] Incl. 1 adapter cable (DisplayPort to DVI-D)

[2] Incl. PCIe x16 graphics card

Ordering data

Additional and expansion components

	Article No.
SIMATIC PC keyboard (USB connection) German/international key assignment	**6ES7648-0CB00-0YA0**
SIMATIC HMI USB mouse Optical mouse with scroll wheel and USB connection, color anthracite	**6AV2181-8AT00-0AX0**
Memory expansion	
• 2 GB DDR3 SDRAM (1 × 2 GB)	**6ES7648-2AJ50-0MA0**
• 4 GB DDR3 SDRAM (1 × 4 GB)	**6ES7648-2AJ60-0MA0**
• 8 GB DDR3 SDRAM (1 × 8 GB)	**6ES7648-2AJ70-0MA0**
Tower kit for SIMATIC PCS 7 Industrial Workstations Tower kit for conversion of a Rack PC into an industrial tower PC	**6ES7648-1AA00-0XC0**
Retainer for locking the internal USB port	**6ES7648-1AA00-0XK0**
Tray for low-profile removable drive bay for 3.5" hard drive (SATA/SAS) or 2.5" SSD (SATA), without drive	**6ES7648-0EG01-1BA0**

	Article No.
Adapter cable	
• DisplayPort to DVI-D for onboard graphics	**6ES7648-3AF00-0XA0**
• DisplayPort to VGA for onboard graphics	**6ES7648-3AG00-0XA0**
• DVI-I to VGA for onboard graphics, 250 mm long	**6ES7648-3AB00-0XA0**
3 m power cord for Rack PC [1]	
• Europe (for Austria, Belgium, Finland, France, Germany, the Netherlands, Spain, Sweden)	**6ES7900-0AA00-0XA0**
• For UK	**6ES7900-0BA00-0XA0**
• For Switzerland	**6ES7900-0CA00-0XA0**
• For the USA	**6ES7900-0DA00-0XA0**
• For Italy	**6ES7900-0EA00-0XA0**
• For China	**6ES7900-0FA00-0XA0**
SIMATIC NET HARDNET IE S7 REDCONNECT PowerPack For communication with high availability AS systems, see section "Communication", section "Industrial Ethernet – system connection of PCS 7 systems", page 10/47	

[1] The SIMATIC PCS 7 preferred types are delivered as standard with a "European power cable". The country-specific versions listed above are required for some countries.

Accessories

Power supply cord for Rack PC

The SIMATIC PCS 7 preferred types are always delivered with a "European power supply cord". This can be used in Germany, France, Spain, Netherlands, Belgium, Sweden, Austria and Finland.

The country-specific versions listed in the Ordering data are required for other countries. The following picture shows the design of a number of power supply plugs:

Country-specific power supply cords for Rack PC

Tower Kit for IPC547E

The Tower Kit enables conversion of a SIMATIC PCS 7 Industrial Workstation with rack PC design to an industrial tower PC.
A Tower Kit can be ordered as an accessory for the SIMATIC PCS 7 Industrial Workstation IPC547E.

Tower Kit for IPC547E

Overview

SIMATIC IPC647D

Based on a SIMATIC Rack PC of type IPC647D, SIMATIC PCS 7 Industrial Workstations in 19" format are extremely compact, rugged and powerful. They are UL-certified and have the CE mark for use in industry as well as residential, business and commercial environments. They are therefore ideally suited for use as a single station, server or client in the SIMATIC PCS 7 process control system. They enable high packing density in the control cabinet and save a significant amount of space in the control room due to their low overall height (2 Us).

Design

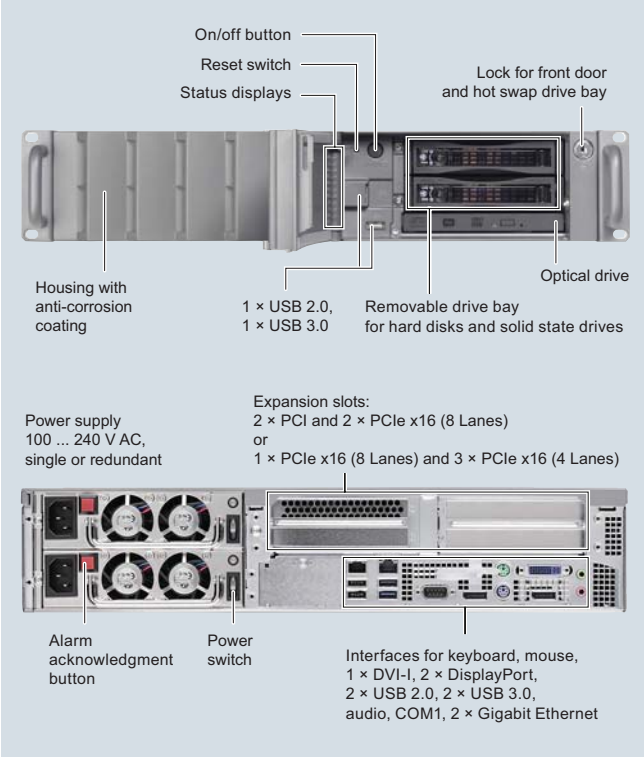

SIMATIC IPC647D, front with open front door (top) and rear

The SIMATIC PCS 7 Industrial Workstations of type IPC647D have a painted all-metal enclosure in 19" rack design (2 Us), which is particularly protected against dust by a filter and pressurized ventilation. This mechanically and electromechanically rugged enclosure has a service-friendly design.

SIMATIC PCS 7 Industrial Workstations of type IPC647D are especially suited for space-saving mounting in 500-mm deep 19" control cabinets due to their compact dimensions. They can be installed or positioned horizontally.

The SIMATIC PCS 7 Industrial Workstations of type IPC647D are suitable for reliable 24-hour continuous operation at ambient temperatures between 5 and 50 °C. Shocks up to 5 g and vibrations up to 0.5 g can be tolerated during operation.

Further essential features

Powerful technology with modern processors and graphic controllers

- Motherboard based on an Intel C226 chipset (DH82C226 PCH)
- Main memory expansion with 4 to 32 GB (client) or 8 to 32 GB (server/single station) DDR3-1600 SDRAM, with or without ECC (mainly in dual-channel mode for the optimum performance)
- Powerful and energy-saving Intel multi-core processors with virtualization technology: XEON E3, Core i5 or Core i3
- Powerful Intel graphics controller HD Graphics 4600/4700 onboard, integrated in the processor:
  - 2 digital interfaces: DVI-I and DisplayPort (DVI-D via DisplayPort DVI adapter)
  - Analog VGA connection via DVI-I adapter to VGA or DisplayPort to VGA
- Optional graphics expansion for multi-monitor mode with up to 4 process monitors (up to 2 process monitors on the onboard graphics controller)
- Optimization to maximum performance with 160/240/480 GB solid-state drive

Design (continued)

Expansion options and interfaces

- 2 × 10/100/1000 Mbit/s Ethernet RJ45 port integrated onboard
- Alternative bus modules with up to 4 slots for PCI/PCI-Express expansion modules (all for modules up to 312 mm long)
  - 2 × PCIe x16 (8 lanes) and 2 × PCI or
  - 1 × PCIe x16 (8 lanes) and 3 × PCIe x16 (4 lanes)
- Total of 4 USB 3.0 ports
  - 2 × on the rear of the device
  - 1 × on the front
  - 1 × internal, e.g. for software license dongle ASIA
- Total of 3 USB 2.0 ports
  - 2 × on the rear of the device
  - 1 × on the front
- Serial COM interface (1 × COM1)
- Further interfaces at the rear of the device:
  - 2 × PS/2 for mouse and keyboard
  - Audio (1 × Line Out, 1 × Micro In)
- Connections for SATA/SAS drives, occupied in accordance with preconfigured features:
  - Up to 2 HDD/SSD in slimline removable drive bay (at the front) or alternatively
  - Up to 2 HDD in the vibration-damped drive cage (internal)
  - 1 slimline DVD burner (at the front) or alternatively
  - 1 SSD in the DVD drive slot

High system availability and safety

- High-quality components with high MTBF values
- RAID1 configurations for data mirroring on 2 drives (also in hot swap removable drive bay for replacement of a hard disk during operation):
  - 2 SATA HDD or 2 SATA SSD on the onboard RAID controller
  - 2 SAS HDD on the hardware RAID controller
- Faulty hard disk in a RAID network can be quickly identified via the HDD alarm LED
- Redundant power supply 100 to 240 V AC as design variation
- Efficient self-diagnostics via LEDs on front for power, watchdog (ready/fault signal), hard disk activity, and status of Ethernet, RAID, fans and temperature
- Closing of the front door prevents:
  - Access to drives, removable memory Media, USB interface, operator controls (reset, power), front fan and filter mat
  - Opening of the enclosure cover

Integration in SIMATIC PCS 7 system diagnostics

- Can be integrated into the system diagnostics with the SIMATIC PCS 7 Maintenance Station by means of the SIMATIC IPC DiagMonitor diagnostics software for monitoring the program execution (watchdog), temperature, fan speed, hard disk status and system failure

Practical and service-friendly design for industrial use

- High EMC
- Degree of protection at front: IP41 (with door closed), at rear: IP20
- Dust protection by means of pressurized ventilation with regulated front fan and dust filter
- Front fan and dust filter can be replaced without tools
- Special hard disk holders and card retainers for protection against vibration and shock
- Fast replacement of hard disks by means of hot-swap frame (configuration option)
- Simple cabinet assembly possible using telescopic rails

High investment protection

- System-tested with SIMATIC PCS 7
- Marketing period 5 years, supply with replacement parts/ repairs over further 5 years
- Support for legacy interfaces (PS/2, COM)
- Certification for worldwide marketing (cULus)
- Worldwide service and support

Design (continued)

Restore DVD

The operating system and the SIMATIC PCS 7 software are already preinstalled on the SIMATIC PCS 7 Industrial Workstations. The supplied restore DVDs permit fast restoring of the delivered status or a new installation for a different application.

The following table shows you the contents of the supplied restore DVDs and the preinstalled software for each version of the SIMATIC PCS 7 Industrial Workstation.

SIMATIC PCS 7 V8.2 Industrial Workstation	Included Restore DVDs	Preinstalled on delivery
Single station		
SIMATIC PCS 7 ES/OS IPC647D (IE or BCE)	Restore DVD 1: Windows 7 Ultimate 64-bit operating system with default settings for optimized SIMATIC PCS 7 operation	–
	Restore DVD 2: Windows 7 Ultimate 64-bit operating system plus software installation for operation as ES/OS single station	●
Server		
SIMATIC PCS 7 OS Server IPC647D (IE or BCE)	Restore DVD 1: Windows Server 2012 R2 64-bit operating system with default settings for optimized SIMATIC PCS 7 operation	–
	Restore DVD 2:	
	• Windows Server 2012 R2 64-bit operating system plus software installation for operation as OS Server	●
	• Windows Server 2012 R2 64-bit operating system plus software installation for operation as SIMATIC PCS 7 Web Server	–
Client		
SIMATIC PCS 7 OS Client IPC647D	Restore DVD 1: Windows 7 Ultimate 64-bit operating system with default settings for optimized SIMATIC PCS 7 operation	–
	Restore DVD 2: Windows 7 Ultimate 64-bit operating system plus software installation for operation as OS client	●

Individual configuration of SIMATIC PCS 7 Industrial Workstations

By selecting predefined equipment features, you can individually configure the SIMATIC PCS 7 Industrial Workstation and thus also its article number. Selection tables for single station, server and client are available for this in the "Ordering data" (paper catalog) section. A further selection table enables you to order complete SIMATIC PCS 7 Industrial Workstations as replacement parts.

The PCS 7 INDUSTRIAL WORKSTATION IPC647D configurator in the Industry Mall allows you to interactively select and order the SIMATIC PCS 7 Industrial Workstation in the single station, server or client version - directly for the system or as a replacement part.

Individually configured SIMATIC PCS 7 Industrial Workstations will be built to order. Therefore the average delivery time for such an order is 15 working days.

Technical specifications

Detailed technical specifications for the SIMATIC PCS 7 Industrial Workstation of type IPC647D is available under "Comparison of the workstation types" in the catalog section "SIMATIC Rack PC, Introduction", page 3/5.

Ordering data

Individually configurable SIMATIC PCS 7 Industrial Workstations IPC647D

	Article No.										
SIMATIC PCS 7 Industrial Workstation for ES/OS single station	**6ES7660-**										
SIMATIC Industrial PC IPC647D	**5**	■	■	■	■	**-**	**2**	**A**	■	■
Windows 7 Ultimate 64-bit operating system, multi-language (English, German, French, Italian, Spanish, Chinese), and SIMATIC PCS 7 V8.2 pre-installed										
Processor and system type										
• Core i3-4330TE (2C/4T, 2.40 GHz, 4 MB cache), ES/OS single station		**A**								
• Core i5-4570TE (2C/4T, 2.70 GHz, 4 MB cache, TB, VT-d, AMT), ES/OS single station		**D**								
• Xeon E3-1268L v3 (4C/8T, 2.30 GHz, 8 MB cache, TB, VT-d, AMT), ES/OS single station		**G**								
Hard disks and solid-state drives										
with SATA hard disk (HDD)										
• 500 GB HDD SATA, 0.5 g vibration, 5 g shock; internal			**A**							
• 1 TB HDD SATA, 0.5 g vibration, 5 g shock; internal			**B**							
• RAID 1, 1 TB (2 × 1 TB HDD SATA, data mirroring); 0.5 g vibration, 5 g shock; internal			**C**							
• 500 GB HDD SATA, in removable drive bay; at the front			**D**							
• 1 TB HDD SATA, in removable drive bay, at the front			**E**							
• RAID 1, 1 TB (2 × 1 TB HDD SATA, data mirroring); in removable drive bay, for hot swapping; at the front			**F**							
• RAID 1, 1 TB (2 × 1 TB HDD SAS, data mirroring); in removable drive bay, for hot swapping; at the front; with hardware RAID controller (PCIe x8; 2 slots occupied) incl. zero-maintenance cache protection (ZMCP) module[4]			**G**							
HDD SATA + SSD										
• RAID 1, 1 TB (2 × 1 TB HDD SATA, data mirroring); 0.5 g vibration, 5 g shock, internal + 240 GB SSD (eMLC) SATA; internal in the DVD drive slot[1]			**H**							
• RAID 1, 1 TB (2 × 1 TB HDD SATA, data mirroring); in removable drive bay, for hot swapping, at the front + 240 GB SSD (eMLC) SATA; internal, in the DVD drive slot[1]			**J**							
• RAID 1, 1 TB (2 × 1 TB HDD SAS, data mirroring); in removable drive bay, hot-swap; at the front; with hardware RAID controller (PCIe x8; 2 slots occupied) incl. ZMCP module + 240 GB SSD (eMLC) SATA; internal in DVD drive slot[1)4)]			**K**							
SSD										
• 240 GB SSD (eMLC) SATA; internal			**Q**							
• 480 GB SSD (eMLC) SATA; internal			**R**							
• 240 GB SSD (eMLC) SATA, in removable drive bay; at the front			**T**							
• 480 GB SSD (eMLC) SATA, in removable drive bay; at the front			**U**							
• RAID 1, 240 GB (2 × 240 GB) SSD (eMLC), SATA, data mirroring; in removable drive bay; for hot swapping; at the front			**V**							
• RAID 1, 480 GB (2 × 480 GB) SSD (eMLC), SATA, data mirroring; in removable drive bay; for hot swapping; at the front			**W**							
Main memory										
• 8 GB DDR3 SDRAM (2 × 4 GB), dual channel				**1**						
• 16 GB DDR3 SDRAM (2 × 8 GB), dual channel				**2**						
• 32 GB DDR3 SDRAM (4 × 8 GB), dual channel				**3**						
• 8 GB DDR3 SDRAM (2 × 4 GB), ECC, dual channel				**5**						
• 16 GB DDR3 SDRAM (2 × 8 GB), ECC, dual channel				**6**						
• 32 GB DDR3 SDRAM (4 × 8 GB), ECC, dual channel				**7**						

	Article No.										
SIMATIC PCS 7 Industrial Workstation for ES/OS single station	**6ES7660-**										
SIMATIC Industrial PC IPC647D	**5**	■	■	■	■	**-**	**2**	**A**	■	■
Windows 7 Ultimate 64-bit operating system, multi-language (English, German, French, Italian, Spanish, Chinese), and SIMATIC PCS 7 V8.2 pre-installed										
Communication with plant bus										
• BCE					**0**					
• Industrial Ethernet (CP 1623)					**1**					
• Without additional communication modules					**8**					
Bus module/removable Media/ multi-monitor option										
Bus module with 2 × PCI, 2 × PCIe x16 (8 lanes)										
• Without optical drive										
- Without multi-monitor mode[4]									**A**	
- Multi-monitor mode for 2 screens[2)4)]									**B**	
- Multi-monitor mode for 4 screens[3)4)]									**C**	
• With DVD±RW (slim)[1]										
- Without multi-monitor mode[1)4)]									**D**	
- Multi-monitor mode for 2 screens[1)2)4)]									**E**	
- Multi-monitor mode for 4 screens[1)3)4)]									**F**	
Bus module with 1 × PCIe x16 (8 lanes), 3 × PCIe x16 (4 lanes)										
• Without optical drive										
- Without multi-monitor mode									**G**	
- Multi-monitor mode for 2 screens[2]									**H**	
- Multi-monitor mode for 4 screens[3]									**J**	
• With DVD±RW (slim)[1]										
- Without multi-monitor mode[1]									**K**	
- Multi-monitor mode for 2 screens[1)2)]									**L**	
- Multi-monitor mode for 4 screens[1)3)]									**M**	
Power supply unit, country-specific version										
• 100 ... 240 V AC industrial power supply to NAMUR										
- Power cord for Europe										**0**
- Power cord for the UK										**1**
- Power cord for Switzerland										**2**
- Power cord for the USA										**3**
- Power cord for Italy										**4**
- Power cord for China										**5**
• 2 × 100 ... 240 V AC, redundant power supply; without power supply cord										**6**

1) The RAID 1 with SSD drive option cannot be used together with a DVD drive since they use the same drive slot:
Selection criterion "Hard disks and solid state drives", item H, J, K, cannot be combined with selection criterion "Bus module/removable Media/multi-monitor option", position D, E, F, K, L, M

2) Incl. 1 adapter cable (DisplayPort to DVI-D)

3) Incl. PCIe x16 graphics card

4) Selection criterion "Hard disks and solid state drives", Position G, K, cannot be combined with selection criterion "Bus module/removable Media/multi-monitor option", position A, B, C, D, E, F

3

Ordering data (continued)

	Article No.									
SIMATIC PCS 7 Industrial Workstation for OS server	**6ES7660-**									
SIMATIC Industrial PC IPC647D	5	■	■	■	■	-	2	E	■	■
Windows Server 2012 R2 Standard Edition operating system, 64-bit, incl. 5 CAL, multi-language (English, German, French, Italian, Spanish, Chinese), and SIMATIC PCS 7 V8.2 preinstalled										
Processor and system type										
• Core i3-4330TE (2C/4T, 2.40 GHz, 4 MB cache), OS server		B								
• Core i5-4570TE (2C/4T, 2.70 GHz, 4 MB cache, TB, VT-d, AMT), OS server		E								
• Xeon E3-1268L v3 (4C/8T, 2.30 GHz, 8 MB cache, TB, VT-d, AMT), OS server		H								
Hard disks and solid-state drives										
with SATA hard disk (HDD)										
• 500 GB HDD SATA, 0.5 g vibration, 5 g shock; internal			A							
• 1 TB HDD SATA, 0.5 g vibration, 5 g shock; internal			B							
• RAID 1, 1 TB (2 × 1 TB HDD SATA, data mirroring); 0.5 g vibration, 5 g shock; internal			C							
• 500 GB HDD SATA, in removable drive bay; at the front			D							
• 1 TB HDD SATA, in removable drive bay, at the front			E							
• RAID 1, 1 TB (2 × 1 TB HDD SATA, data mirroring); in removable drive bay, for hot swapping; at the front			F							
• RAID 1, 1 TB (2 × 1 TB HDD SAS, data mirroring); in removable drive bay, for hot swapping; at the front; with hardware RAID controller (PCIe x8; 2 slots occupied) incl. zero-maintenance cache protection (ZMCP) module[4]			G							
HDD SATA + SSD										
• RAID 1, 1 TB (2 × 1 TB HDD SATA, data mirroring); 0.5 g vibration, 5 g shock, internal + 240 GB SSD (eMLC) SATA; internal in the DVD drive slot[1]			H							
• RAID 1, 1 TB (2 × 1 TB HDD SATA, data mirroring); in removable drive bay, for hot swapping, at the front + 240 GB SSD (eMLC) SATA; internal, in the DVD drive slot[1]			J							
• RAID 1, 1 TB (2 × 1 TB HDD SAS, data mirroring); in removable drive bay, hot-swap; at the front; with hardware RAID controller (PCIe x8; 2 slots occupied) incl. ZMCP module + 240 GB SSD (eMLC) SATA; internal in DVD drive slot[1)4)]			K							
SSD										
• 240 GB SSD (eMLC) SATA; internal			Q							
• 480 GB SSD (eMLC) SATA; internal			R							
• 240 GB SSD (eMLC) SATA, in removable drive bay; at the front			T							
• 480 GB SSD (eMLC) SATA, in removable drive bay; at the front			U							
• RAID 1, 240 GB (2 × 240 GB) SSD (eMLC), SATA, data mirroring; in removable drive bay; for hot swapping; at the front			V							
• RAID 1, 480 GB (2 × 480 GB) SSD (eMLC), SATA, data mirroring; in removable drive bay; for hot swapping; at the front			W							
Main memory										
• 8 GB DDR3 SDRAM (2 × 4 GB), dual channel				1						
• 16 GB DDR3 SDRAM (2 × 8 GB), dual channel				2						
• 32 GB DDR3 SDRAM (4 × 8 GB), dual channel				3						
• 8 GB DDR3 SDRAM (2 × 4 GB), ECC, dual channel				5						
• 16 GB DDR3 SDRAM (2 × 8 GB), ECC, dual channel				6						
• 32 GB DDR3 SDRAM (4 × 8 GB), ECC, dual channel				7						

	Article No.									
SIMATIC PCS 7 Industrial Workstation for OS server	**6ES7660-**									
SIMATIC Industrial PC IPC647D	5	■	■	■	■	-	2	E	■	■
Windows Server 2012 R2 Standard Edition operating system, 64-bit, incl. 5 CAL, multi-language (English, German, French, Italian, Spanish, Chinese), and SIMATIC PCS 7 V8.2 preinstalled										
Communication with plant bus										
• BCE					0					
• Industrial Ethernet (CP 1623)					1					
• Without additional communication modules					8					
Bus module/removable Media/ multi-monitor option										
Bus module with 2 × PCI, 2 × PCIe x16 (8 lanes)										
• Without optical drive										
- Without multi-monitor mode[4]									A	
- Multi-monitor mode for 2 screens[2)4)]									B	
- Multi-monitor mode for 4 screens[3)4)]									C	
• With DVD±RW (slim)[1]										
- Without multi-monitor mode[1)4)]									D	
- Multi-monitor mode for 2 screens[1)2)4)]									E	
- Multi-monitor mode for 4 screens[1)3)4)]									F	
Bus module with 1 × PCIe x16 (8 lanes), 3 × PCIe x16 (4 lanes)										
• Without optical drive										
- Without multi-monitor mode									G	
- Multi-monitor mode for 2 screens[2)]									H	
- Multi-monitor mode for 4 screens[3)]									J	
• With DVD±RW (slim)[1]										
- Without multi-monitor mode[1)]									K	
- Multi-monitor mode for 2 screens[1)2)]									L	
- Multi-monitor mode for 4 screens[1)3)]									M	
Power supply unit, country-specific version										
• 100 ... 240 V AC industrial power supply to NAMUR										
- Power cord for Europe										0
- Power cord for the UK										1
- Power cord for Switzerland										2
- Power cord for the USA										3
- Power cord for Italy										4
- Power cord for China										5
• 2 × 100 ... 240 V AC, redundant power supply; without power supply cord										6

1) The RAID 1 with SSD drive option cannot be used together with a DVD drive since they use the same drive slot:
Selection criterion "Hard disks and solid state drives", item H, J, K, cannot be combined with selection criterion "Bus module/removable Media/multi-monitor option", position D, E, F, K, L, M

2) Incl. 1 adapter cable (DisplayPort to DVI-D)

3) Incl. PCIe x16 graphics card

4) Selection criterion "Hard disks and solid state drives", Position G, K, cannot be combined with selection criterion "Bus module/removable Media/multi-monitor option", position A, B, C, D, E, F

Ordering data (continued)

	Article No.									
SIMATIC PCS 7 Industrial Workstation for OS client	**6ES7660-**									
SIMATIC Industrial PC IPC647D	**5**	■	■	■	■	**-**	**2**	■	■	■
SIMATIC PCS 7 V8.2 pre-installed										
Processor and system type										
• Core i3-4330TE (2C/4T, 2.40 GHz, 4 MB cache), OS client		**C**								
• Core i5-4570TE (2C/4T, 2.70 GHz, 4 MB cache, TB, VT-d, AMT), OS client		**F**								
• Xeon E3-1268L v3 (4C/8T, 2.30 GHz, 8 MB cache, TB, VT-d, AMT), OS client		**J**								
Hard disks and solid-state drives										
with SATA hard disk (HDD)										
• 500 GB HDD SATA, 0.5 g vibration, 5 g shock; internal			**A**							
• 1 TB HDD SATA, 0.5 g vibration, 5 g shock; internal			**B**							
• RAID 1, 1 TB (2 × 1 TB HDD SATA, data mirroring); 0.5 g vibration, 5 g shock; internal			**C**							
• 500 GB HDD SATA, in removable drive bay; at the front			**D**							
• 1 TB HDD SATA, in removable drive bay, at the front			**E**							
• RAID 1, 1 TB (2 × 1 TB HDD SATA, data mirroring); in removable drive bay, for hot swapping; at the front			**F**							
SSD										
• 240 GB SSD (eMLC) SATA; internal			**Q**							
• 480 GB SSD (eMLC) SATA; internal			**R**							
• 240 GB SSD (eMLC) SATA, in removable drive bay; at the front			**T**							
• 480 GB SSD (eMLC) SATA, in removable drive bay; at the front			**U**							
Main memory										
• 4 GB DDR3 SDRAM (2 × 2 GB), dual channel				**0**						
• 8 GB DDR3 SDRAM (2 × 4 GB), dual channel				**1**						
• 16 GB DDR3 SDRAM (2 × 8 GB), dual channel				**2**						
• 32 GB DDR3 SDRAM (4 × 8 GB), dual channel				**3**						
• 4 GB DDR3 SDRAM (1 × 4 GB), ECC, single channel				**4**						
• 8 GB DDR3 SDRAM (2 × 4 GB), ECC, dual channel				**5**						
• 16 GB DDR3 SDRAM (2 × 8 GB), ECC, dual channel				**6**						
• 32 GB DDR3 SDRAM (4 × 8 GB), ECC, dual channel				**7**						
Communication with plant bus										
• Without additional communication modules					**8**					

	Article No.									
SIMATIC PCS 7 Industrial Workstation for OS client	**6ES7660-**									
SIMATIC Industrial PC IPC647D	**5**	■	■	■	■	**-**	**2**	■	■	■
SIMATIC PCS 7 V8.2 pre-installed										
Operating system										
• Windows 7 Ultimate 64-bit, multi-language (German, English, French, Italian, Spanish, Chinese)							**A**			
• Windows 10 IoT Enterprise 2015 LTSB 64-bit, multi-language (German, English, French, Italian, Spanish, Chinese)							**B**			
Interfaces on bus module/swap Media/ multi-monitor option										
Bus module with 2 × PCI, 2 × PCIe x16 (8 lanes)										
• Without optical drive										
- Without multi-monitor mode									**A**	
- Multi-monitor mode for 2 screens[2)]									**B**	
- Multi-monitor mode for 4 screens[3)]									**C**	
• With DVD±RW (slim)										
- Without multi-monitor mode									**D**	
- Multi-monitor mode for 2 screens[2)]									**E**	
- Multi-monitor mode for 4 screens[3)]									**F**	
Bus module with 1 × PCIe x16 (8 lanes), 3 × PCIe x16 (4 lanes)										
• Without optical drive										
- Without multi-monitor mode									**G**	
- Multi-monitor mode for 2 screens[2)]									**H**	
- Multi-monitor mode for 4 screens[3)]									**J**	
• With DVD±RW (slim)										
- Without multi-monitor mode									**K**	
- Multi-monitor mode for 2 screens[2)]									**L**	
- Multi-monitor mode for 4 screens[3)]									**M**	
Power supply unit, country-specific version										
• 100 ... 240 V AC industrial power supply to NAMUR										
- Power cord for Europe										**0**
- Power cord for the UK										**1**
- Power cord for Switzerland										**2**
- Power cord for the USA										**3**
- Power cord for Italy										**4**
- Power cord for China										**5**
• 2 × 100 ... 240 V AC, redundant power supply; without power supply cord										**6**

[2)] Incl. 1 adapter cable (DisplayPort to DVI-D)

[3)] Incl. PCIe x16 graphics card

3

Ordering data (continued)

SIMATIC PCS 7 Industrial Workstations of the type IPC647D as replacement part

Without hardware expansions, software pre-installation, system software licenses, restore DVDs

Replacement for ES/OS single station, OS server, or OS client of type IPC647D

	Article No.									
SIMATIC PCS 7 Industrial Workstation as replacement part	**6ES7660-**									
Industrial PC SIMATIC IPC647D without pre-installation, without SIMATIC PCS 7 restore DVDs	**5**	■	■	■	■	**-**	**8**	■	■	■
Processor and system type										
• Core i3-4330TE (2C/4T, 2.40 GHz, 4 MB cache), replacement part		**W**								
• Core i5-4570TE (2C/4T, 2.70 GHz, 4 MB cache, TB, VT-d, AMT), replacement part		**X**								
• Xeon E3-1268L v3 (4C/8T, 2.30 GHz, 8 MB cache, TB, VT-d, AMT), replacement part		**Y**								
Hard disks and solid-state drives										
with SATA hard disk (HDD)										
• 500 GB HDD SATA, 0.5 g vibration, 5 g shock; internal			**A**							
• 1 TB HDD SATA, 0.5 g vibration, 5 g shock; internal			**B**							
• RAID 1, 1 TB (2 × 1 TB HDD SATA, data mirroring); 0.5 g vibration, 5 g shock; internal			**C**							
• 500 GB HDD SATA, in removable drive bay; at the front			**D**							
• 1 TB HDD SATA, in removable drive bay, at the front			**E**							
• RAID 1, 1 TB (2 × 1 TB HDD SATA, data mirroring); in removable drive bay, for hot swapping; at the front			**F**							
• RAID 1, 1 TB (2 × 1 TB HDD SAS, data mirroring); in removable drive bay, for hot swapping; at the front; with hardware RAID controller (PCIe x8; 2 slots occupied) incl. zero-maintenance cache protection (ZMCP) module[4]			**G**							
HDD SATA + SSD										
• RAID 1, 1 TB (2 × 1 TB HDD SATA, data mirroring); 0.5 g vibration, 5 g shock, internal + 240 GB SSD (eMLC) SATA; internal in the DVD drive slot[1]			**H**							
• RAID 1, 1 TB (2 × 1 TB HDD SATA, data mirroring); in removable drive bay, for hot swapping, at the front + 240 GB SSD (eMLC) SATA; internal, in the DVD drive slot[1]			**J**							
• RAID 1, 1 TB (2 × 1 TB HDD SAS, data mirroring); in removable drive bay, hot-swap; at the front; with hardware RAID controller (PCIe x8; 2 slots occupied) incl. ZMCP module + 240 GB SSD (eMLC) SATA; internal in DVD drive slot[1)4)]			**K**							
SSD										
• 240 GB SSD (eMLC) SATA; internal			**Q**							
• 480 GB SSD (eMLC) SATA; internal			**R**							
• 240 GB SSD (eMLC) SATA, in removable drive bay; at the front			**T**							
• 480 GB SSD (eMLC) SATA, in removable drive bay; at the front			**U**							
• RAID 1, 240 GB (2 × 240 GB) SSD (eMLC), SATA, data mirroring; in removable drive bay; for hot swapping; at the front			**V**							
• RAID 1, 480 GB (2 × 480 GB) SSD (eMLC), SATA, data mirroring; in removable drive bay; for hot swapping; at the front			**W**							
Main memory										
• 4 GB DDR3 SDRAM (2 × 2 GB), dual channel				**0**						
• 8 GB DDR3 SDRAM (2 × 4 GB), dual channel				**1**						
• 16 GB DDR3 SDRAM (2 × 8 GB), dual channel				**2**						
• 32 GB DDR3 SDRAM (4 × 8 GB), dual channel				**3**						
• 4 GB DDR3 SDRAM (1 × 4 GB); ECC, single channel				**4**						
• 8 GB DDR3 SDRAM (2 × 4 GB), ECC, dual channel				**5**						
• 16 GB DDR3 SDRAM (2 × 8 GB), ECC, dual channel				**6**						
• 32 GB DDR3 SDRAM (4 × 8 GB), ECC, dual channel				**7**						

	Article No.									
SIMATIC PCS 7 Industrial Workstation as replacement part	**6ES7660-**									
Industrial PC SIMATIC IPC647D without pre-installation, without SIMATIC PCS 7 restore DVDs	**5**	■	■	■	■	**-**	**8**	■	■	■
Communication with plant bus										
• BCE					**0**					
• Industrial Ethernet (CP 1623)					**1**					
• Without additional communication modules					**8**					
Operating system										
• Windows 7 Ultimate, 64-bit, multi-language (English, German, French, Italian, Spanish, Chinese)								**A**		
• Windows 10 IoT Enterprise 2015 LTSB 64-bit, multi-language (German, English, French, Italian, Spanish, Chinese)								**B**		
• Windows Server 2008 R2 Standard Edition incl. 5 CAL, 64-bit, multi-language (English, German, French, Italian, Spanish, Chinese)								**D**		
• Windows Server 2012 R2 Standard Edition incl. 5 CAL, 64-bit, multi-language (English, German, French, Italian, Spanish, Chinese)								**E**		
• Without operating system								**X**		
Interfaces on bus module/swap Media/ multi-monitor option										
Bus module with 2 × PCI, 2 × PCIe x16 (8 lanes)										
• Without optical drive										
- Without multi-monitor mode[4]									**A**	
- Multi-monitor mode for 2 screens[2)4)]									**B**	
- Multi-monitor mode for 4 screens[3)4)]									**C**	
• With DVD±RW (slim)[1]										
- Without multi-monitor mode[1)4)]									**D**	
- Multi-monitor mode for 2 screens[1)2)4)]									**E**	
- Multi-monitor mode for 4 screens[1)3)4)]									**F**	
Bus module with 1 × PCIe x16 (8 lanes), 3 × PCIe x16 (4 lanes)										
• Without optical drive										
- Without multi-monitor mode									**G**	
- Multi-monitor mode for 2 screens[2)]									**H**	
- Multi-monitor mode for 4 screens[3)]									**J**	
• With DVD±RW (slim)[1]										
- Without multi-monitor mode[1)]									**K**	
- Multi-monitor mode for 2 screens[1)2)]									**L**	
- Multi-monitor mode for 4 screens[1)3)]									**M**	
Power supply unit, country-specific version										
• 100 ... 240 V AC industrial power supply to NAMUR										
- Power cord for Europe										**0**
- Power cord for the UK										**1**
- Power cord for Switzerland										**2**
- Power cord for the USA										**3**
- Power cord for Italy										**4**
- Power cord for China										**5**
• 2 × 100 ... 240 V AC, redundant power supply; without power supply cord										**6**

1) The RAID 1 with SSD drive option cannot be used together with a DVD drive since they use the same drive slot:
Selection criterion "Hard disks and solid state drives", item H, J, K, cannot be combined with selection criterion "Bus module/removable Media/multi-monitor option", position D, E, F, K, L, M

2) Incl. 1 adapter cable (DisplayPort to DVI-D)

3) Incl. PCIe x16 graphics card

4) Selection criterion "Hard disks and solid state drives", Position G, K, cannot be combined with selection criterion "Bus module/removable Media/multi-monitor option", position A, B, C, D, E, F

Ordering data

Additional and expansion components

	Article No.
SIMATIC PC keyboard (USB connection) German/international key assignment	**6ES7648-0CB00-0YA0**
SIMATIC HMI USB mouse Optical mouse with scroll wheel and USB connection, color anthracite	**6AV2181-8AT00-0AX0**
Memory expansion	
• 2 GB DDR3 SDRAM (1 × 2 GB)	**6ES7648-2AJ50-0MA0**
• 4 GB DDR3 SDRAM (1 × 4 GB)	**6ES7648-2AJ60-0MA0**
• 4 GB DDR3 SDRAM with ECC (1 × 4 GB)	**6ES7648-2AJ60-1MA0**
• 8 GB DDR3 SDRAM (1 × 8 GB)	**6ES7648-2AJ70-0MA0**
• 8 GB DDR3 SDRAM with ECC (1 × 8 GB)	**6ES7648-2AJ70-1MA0**
Retainer for locking the internal USB port	**6ES7648-1AA00-0XK0**
Rack unit for low-profile removable drive bay for 3.5" hard drive (SATA/SAS) or 2.5" SSD (SATA), without drive	**6ES7648-0EG01-1BA0**
Filter mats for SIMATIC IPC647D (packing unit: 10 units)	**A5E02396171**

	Article No.
Adapter cable	
• DisplayPort to DVI-D for onboard graphics	**6ES7648-3AF00-0XA0**
• DisplayPort to VGA for onboard graphics	**6ES7648-3AG00-0XA0**
• DVI-I to VGA for onboard graphics, 250 mm long	**6ES7648-3AB00-0XA0**
3 m power cord for Rack PC [1]	
• Europe (for Austria, Belgium, Finland, France, Germany, the Netherlands, Spain, Sweden)	**6ES7900-0AA00-0XA0**
• For UK	**6ES7900-0BA00-0XA0**
• For Switzerland	**6ES7900-0CA00-0XA0**
• For the USA	**6ES7900-0DA00-0XA0**
• For Italy	**6ES7900-0EA00-0XA0**
• For China	**6ES7900-0FA00-0XA0**
SIMATIC NET HARDNET IE S7 REDCONNECT PowerPack For communication with high availability AS systems, see Chapter "Communication", Section "Industrial Ethernet – system connection of PCS 7 systems", page 10/47	

[1] The SIMATIC PCS 7 preferred types are delivered as standard with a "European power cable". The country-specific versions listed above are required for some countries.

Accessories

Power supply cord for Rack PC

The SIMATIC PCS 7 preferred types are always delivered with a "European power supply cord". This can be used in Germany, France, Spain, Netherlands, Belgium, Sweden, Austria and Finland.

The country-specific versions listed in the Ordering data are required for other countries. The following picture shows the design of a number of power supply plugs:

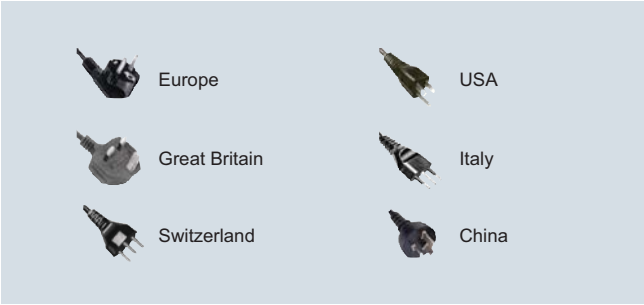

Country-specific power supply cords for Rack PC

Overview

SIMATIC IPC847D

The SIMATIC PCS 7 Industrial Workstation of type IPC847D is the most powerful and best equipped system platform. It satisfies all requirements for implementing complex server applications and for archiving process data.

Many basic components, such as chipset, processor, memory, etc. are for the most part identical to those of type IPC647D. As a result of the double overall height, the SIMATIC PCS 7 Industrial Workstation of type IPC847D has more slots and therefore ample potential for expansions. Since it would be over-dimensioned as a client, it is only offered as a single station and server.

Design

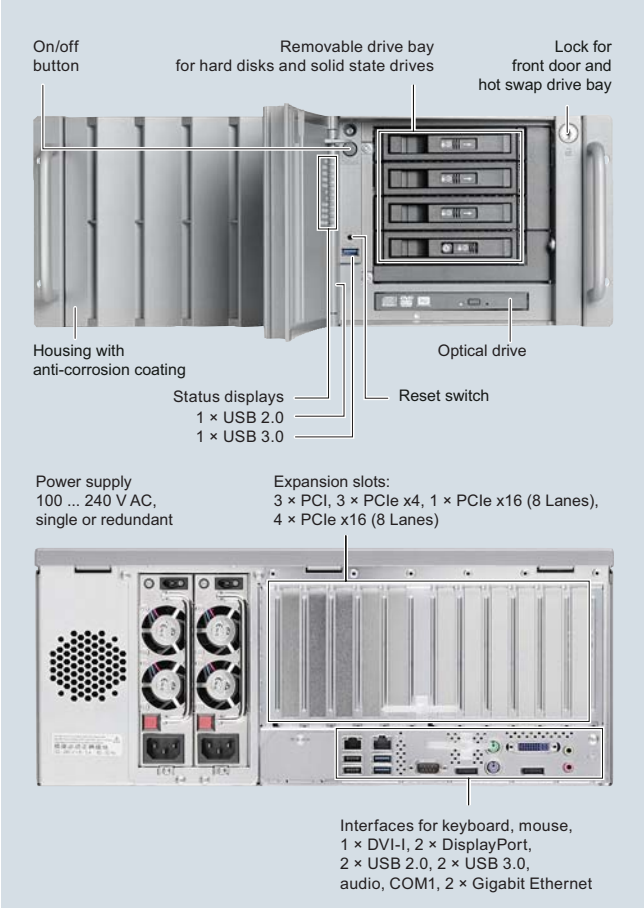

SIMATIC IPC847D, front with open front door (top) and rear

SIMATIC PCS 7 Industrial Workstations of type IPC847D are UL-certified and have the CE marking for use in industry as well as residential, business and commercial environments.

The painted all-metal enclosure in 19" mounting format (4 HUs) is especially protected against dust by a filter and pressurized ventilation. It features a mechanically and electromagnetically rugged design and is very easy to service.

The SIMATIC PCS 7 Industrial Workstations of type IPC847D can be positioned and installed horizontally or vertically. Using an optional tower kit, the Rack PC can be converted into an industry tower. The dimensions of the IPC847D also allow space-saving assembly in 500-mm deep 19" control cabinets.

The SIMATIC PCS 7 Industrial Workstations of type IPC847D are suitable for reliable 24-hour continuous operation at ambient temperatures between 5 and 50 °C. Shocks up to 5 g and vibrations up to 0.5 g can be tolerated during operation.

Further essential features

Powerful technology with modern processors and graphic controllers

- Motherboard based on an Intel C226 chipset (DH82C226 PCH)
- Main memory expansion with 4 to 8 GB DDR3-1066 SDRAM, either with or without ECC (mainly in dual-channel mode for the best performance)
- Powerful and energy-saving Intel multi-core processors with virtualization technology: XEON E3, Core i5 or Core i3
- Powerful Intel graphics controller HD Graphics 4600/4700 onboard, integrated in the processor:
  - 2 digital interfaces: DVI-I and DisplayPort (DVI-D via DisplayPort DVI adapter)
  - Analog VGA connection via DVI-I adapter to VGA or DisplayPort to VGA
- Optional graphics expansion for multi-monitor mode with up to 4 process monitors (up to 2 process monitors on the onboard graphics controller)
- Optimization to maximum performance with 240/480 GB solid-state drive

Design (continued)

Expansion options and interfaces

- 2 × 10/100/1000 Mbit/s Ethernet RJ45 port integrated onboard
- Bus module with up to 11 slots for PCI/PCI-Express expansion modules (all for modules up to 312 mm long)
  - 1 × PCIe x16 (8 lanes)
  - 4 × PCIe x16 (4 lanes)
  - 3 × PCIe x4 (4 lanes)
  - 3 × PCI
- Total of 4 USB 3.0 ports
  - 2 × on the rear of the device
  - 1 × on the front
  - 1 × internal, e.g. for software license dongle ASIA
- Total of 3 USB 2.0 ports
  - 2 × on the rear of the device
  - 1 × on the front
- Serial COM interface (1 × COM1)
- Further interfaces at the rear of the device:
  - 2 × PS/2 for mouse and keyboard
  - Audio (1 × Line Out, 1 × Micro In)
- Connections for SATA/SAS drives, occupied in accordance with preconfigured features:
  - Up to 4 HDD/SSD in slimline removable drive bay (at the front)
  - 1 slimline DVD burner (at the front)
  - Up to 2 HDD/SSD 3.5"/2.5" in the internal drive cage
  - Up to 2 HDD in the rear drive cage (internal, vibration-damped)

High system availability and safety

- High-quality components with high MTBF values
- RAID1 configurations for data mirroring on 2 drives (also in hot swap removable drive bay for replacement of a hard disk during operation) with:
  - 2 SATA HDD or 2 SATA SSD on the onboard RAID controller
  - 2 SAS HDD on the hardware RAID controller
- RAID 5 configuration with 3 SAS HDD on the hardware RAID controller for striping with parity (in hot swap removable drive bay for replacement of a hard disk during operation)
- RAID configurations optionally with hot-spare hard disk (reserve) for automatically taking over the function of a faulty hard disk
- Faulty hard disk in a RAID configuration can be quickly identified via the HDD alarm LED
- Redundant 100 to 240 V AC power supply with "hot swap" functionality (module replacement during operation) as design variation
- Efficient self-diagnostics via LEDs on front for power, watchdog (ready/fault signal), hard disk activity, and status of Ethernet, RAID, fans and temperature
- Closing of the front door prevents:
  - Access to drives, removable memory Media, USB interface, operator controls (reset, power), front fan and filter mat
  - Opening of the enclosure cover

Integration in SIMATIC PCS 7 system diagnostics

- Can be integrated into the system diagnostics with the SIMATIC PCS 7 Maintenance Station by means of the SIMATIC IPC DiagMonitor diagnostics software for monitoring the program execution (watchdog), temperature, fan speed, hard disk status and system failure

Practical and service-friendly design for industrial use

- High EMC
- Degree of protection at front: IP41 (with door closed), at rear: IP20
- Dust protection by means of pressurized ventilation with regulated front fan and dust filter
- Front fan and dust filter can be replaced without tools
- Special hard disk holders and card retainers for protection against vibration and shock
- Fast replacement of hard disks by means of hot-swap frame (configuration option)
- Simple cabinet assembly possible using telescopic rails

High investment protection

- System-tested with SIMATIC PCS 7
- Marketing period 5 years, supply with replacement parts/ repairs over further 5 years
- Support for legacy interfaces (PS/2, COM)
- Certification for worldwide marketing (cULus)
- Installation compatible across device generations
- Worldwide service and support

Design (continued)

Restore DVD

The operating system and the SIMATIC PCS 7 software are already preinstalled on the SIMATIC PCS 7 Industrial Workstations. The supplied restore DVDs permit fast restoring of the delivered status or a new installation for a different application.

The following table shows you the contents of the supplied restore DVDs and the preinstalled software for each version of the SIMATIC PCS 7 Industrial Workstation.

SIMATIC PCS 7 V8.2 Industrial Workstation	Included Restore DVDs	Preinstalled on delivery
Single station		
SIMATIC PCS 7 ES/OS IPC847D (IE or BCE)	Restore DVD 1: Windows 7 Ultimate 64-bit operating system with default settings for optimized SIMATIC PCS 7 operation	–
	Restore DVD 2: Windows 7 Ultimate 64-bit operating system plus software installation for operation as ES/OS single station	●
Server		
SIMATIC PCS 7 OS Server IPC847D (IE or BCE)	Restore DVD 1: Windows Server 2012 R2 64-bit operating system with default settings for optimized SIMATIC PCS 7 operation	–
	Restore DVD 2:	
	• Windows Server 2012 R2 64-bit operating system plus software installation for operation as OS Server	●
	• Windows Server 2012 R2 64-bit operating system plus software installation for operation as SIMATIC PCS 7 Web Server	–

Individual configuration of SIMATIC PCS 7 Industrial Workstations

By selecting predefined equipment features, you can individually configure the SIMATIC PCS 7 Industrial Workstation and thus also its article number. Selection tables for single station, server and client are available for this in the "Ordering data" section. A further selection table enables you to order complete SIMATIC PCS 7 Industrial Workstations as replacement parts.

The PCS 7 INDUSTRIAL WORKSTATION IPC847D configurator in the Industry Mall allows you to interactively select and order the SIMATIC PCS 7 Industrial Workstation in the single station or server version - directly for the system or as a replacement part.

Individually configured SIMATIC PCS 7 Industrial Workstations will be built to order. Therefore the average delivery time for such an order is 15 working days.

Technical specifications

Detailed technical specifications for the SIMATIC PCS 7 Industrial Workstation of type IPC847D is available under "Comparison of the workstation types" in the catalog section "SIMATIC Rack PC, Introduction", page 3/5.

Ordering data

Individually configurable SIMATIC PCS 7 Industrial Workstations IPC847D

	Article No.										
SIMATIC PCS 7 Industrial Workstation for ES/OS single station	**6ES7660-**										
SIMATIC IPC847D industrial PC	**6**	■	■	■	■	**-**	**2**	**A**	■	■
Windows 7 Ultimate 64-bit operating system, multi-language (English, German, French, Italian, Spanish, Chinese), and SIMATIC PCS 7 V8.2 pre-installed										
Processor and system type										
• Core i3-4330TE (2C/4T, 2.40 GHz, 4 MB cache), ES/OS single station		**A**								
• Core i5-4570TE (2C/4T, 2.70 GHz, 4 MB cache, TB, VT-d, AMT), ES/OS single station		**D**								
• Xeon E3-1268L v3 (4C/8T, 2.30 GHz, 8 MB cache, TB, VT-d, AMT), ES/OS single station		**G**								
Hard disks and solid-state drives										
with SATA hard disk (HDD)										
• 500 GB HDD SATA, 0.5 g vibration, 5 g shock; internal			**A**							
• 1 TB HDD SATA, 0.5 g vibration, 5 g shock; internal			**B**							
• RAID 1, 1 TB (2 × 1 TB HDD SATA, data mirroring); 0.5 g vibration, 5 g shock; internal			**C**							
• 500 GB HDD SATA, in removable drive bay; at the front			**D**							
• 1 TB HDD SATA, in removable drive bay, at the front			**E**							
• RAID 1, 1 TB (2 × 1 TB HDD SATA, data mirroring); in removable drive bay, for hot swapping; at the front			**F**							
• RAID 1, 1 TB (2 x 1 TB HDD SATA, data mirroring) + 1 TB HDD SATA as hot spare; in removable drive bay, for hot swapping; at the front			**G**							
• RAID 1, 1 TB (2 × 1 TB HDD SAS, data mirroring); in removable drive bay, for hot swapping; at the front; with hardware RAID controller (PCIe x8; 2 slots occupied) incl. zero-maintenance cache protection (ZMCP) module			**H**							
• RAID 5, 2 TB (3 × 1 TB HDD SAS, striping with parity); in removable drive bay, for hot swapping; at the front; with hardware RAID controller (PCIe x8; 2 slots occupied) incl. ZMCP module			**K**							
• RAID 5, 2 TB (3 × 1 TB HDD SAS, striping with parity) + 1 TB HDD SAS as hot spare; in removable drive bay, for hot swapping; at the front; with hardware RAID controller (PCIe x8; 2 slots occupied) incl. ZMCP module			**L**							
HDD SATA + SSD										
• RAID 1, 1 TB (2 × 1 TB HDD SATA, data mirroring); 0.5 g vibration, 5 g shock, internal + 240 GB SSD SATA; in removable drive bay, at the front			**M**							
• RAID 1, 1 TB (2 × 1 TB HDD SATA, data mirroring), in removable drive bay, for hot swapping + 240 GB SSD (eMLC) SATA, in removable drive bay; at the front			**N**							
• RAID 1, 1 TB (2 × 1 TB HDD SAS, data mirroring); in removable drive bay, for hot swapping; at the front; with hardware RAID controller (PCIe x8; 2 slots occupied) incl. ZMCP module + 240 GB SSD (eMLC) SATA; in removable drive bay, at the front			**P**							
• RAID 5, 2 TB (3 × 1 TB HDD SAS, striping with parity); in removable drive bay, for hot swapping; at the front; with hardware RAID controller (PCIe x8; 2 slots occupied) incl. ZMCP module + 240 GB SSD (eMLC) SATA; in removable drive bay, at the front			**Q**							

	Article No.										
SIMATIC PCS 7 Industrial Workstation for ES/OS single station	**6ES7660-**										
SIMATIC IPC847D industrial PC	**6**	■	■	■	■	**-**	**2**	**A**	■	■
Windows 7 Ultimate 64-bit operating system, multi-language (English, German, French, Italian, Spanish, Chinese), and SIMATIC PCS 7 V8.2 pre-installed										
SSD										
• 240 GB SSD (eMLC) SATA; internal			**R**							
• 480 GB SSD (eMLC) SATA; internal			**S**							
• 240 GB SSD (eMLC) SATA, in removable drive bay; at the front			**T**							
• 480 GB SSD (eMLC) SATA, in removable drive bay; at the front			**U**							
• RAID 1, 240 GB (2 × 240 GB) SSD (eMLC), SATA, data mirroring; in removable drive bay; for hot swapping; at the front			**V**							
• RAID 1, 480 GB (2 × 480 GB) SSD (eMLC), SATA, data mirroring; in removable drive bay; for hot swapping; at the front			**W**							
Main memory										
• 8 GB DDR3 SDRAM (2 × 4 GB), dual channel				**1**						
• 16 GB DDR3 SDRAM (2 × 8 GB), dual channel				**2**						
• 32 GB DDR3 SDRAM (4 × 8 GB), dual channel				**3**						
• 8 GB DDR3 SDRAM (2 × 4 GB), ECC, dual channel				**5**						
• 16 GB DDR3 SDRAM (2 × 8 GB), ECC, dual channel				**6**						
• 32 GB DDR3 SDRAM (4 × 8 GB), ECC, dual channel				**7**						
Communication with plant bus										
• BCE					**0**					
• Industrial Ethernet (CP 1623)					**1**					
• Without additional communication modules					**8**					
Interfaces on bus module/swap Media/ multi-monitor option										
Bus module with 3 × PCI, 3 × PCIe x4, 5 × PCIe x16										
• Without optical drive										
- Without multi-monitor mode									**A**	
- Multi-monitor mode for 2 screens[1]									**B**	
- Multi-monitor mode for 4 screens[2]									**C**	
• With DVD±RW (slim)										
- Without multi-monitor mode									**D**	
- Multi-monitor mode for 2 screens[1]									**E**	
- Multi-monitor mode for 4 screens[2]									**F**	
Power supply unit, country-specific version										
• 100 ... 240 V AC industrial power supply to NAMUR										
- Power cord for Europe										**0**
- Power cord for the UK										**1**
- Power cord for Switzerland										**2**
- Power cord for the USA										**3**
- Power cord for Italy										**4**
- Power cord for China										**5**
• 2 × 100 ... 240 V AC, redundant power supply; without power supply cord										**6**

[1] Incl. 1 adapter cable (DisplayPort to DVI-D)

[2] Incl. PCIe x16 graphics card

Ordering data (continued)

	Article No.									
SIMATIC PCS 7 Industrial Workstation For OS server	**6ES7660-**									
SIMATIC IPC847D industrial PC	**6**	■	■	■	■	**-**	**2**	**E**	■	■
Windows Server 2012 R2 Standard Edition operating system, 64-bit, incl. 5 CAL, multi-language (English, German, French, Italian, Spanish, Chinese), and SIMATIC PCS 7 V8.2 preinstalled										
Processor and system type										
• Core i3-4330TE (2C/4T, 2.40 GHz, 4 MB cache), OS server		**B**								
• Core i5-4570TE (2C/4T, 2.70 GHz, 4 MB cache, TB, VT-d, AMT), OS server		**E**								
• Xeon E3-1268L v3 (4C/8T, 2.30 GHz, 8 MB cache, TB, VT-d, AMT), OS server		**H**								
Hard disks and solid-state drives										
with SATA hard disk (HDD)										
• 500 GB HDD SATA, 0.5 g vibration, 5 g shock; internal			**A**							
• 1 TB HDD SATA, 0.5 g vibration, 5 g shock; internal			**B**							
• RAID 1, 1 TB (2 × 1 TB HDD SATA, data mirroring); 0.5 g vibration, 5 g shock; internal			**C**							
• 500 GB HDD SATA, in removable drive bay; at the front			**D**							
• 1 TB HDD SATA, in removable drive bay, at the front			**E**							
• RAID 1, 1 TB (2 × 1 TB HDD SATA, data mirroring); in removable drive bay, for hot swapping; at the front			**F**							
• RAID 1, 1 TB (2 x 1 TB HDD SATA, data mirroring) + 1 TB HDD SATA as hot spare; in removable drive bay, for hot swapping; at the front			**G**							
• RAID 1, 1 TB (2 × 1 TB HDD SAS, data mirroring); in removable drive bay, for hot swapping; at the front; with hardware RAID controller (PCIe x8; 2 slots occupied) incl. zero-maintenance cache protection (ZMCP) module			**H**							
• RAID 5, 2 TB (3 × 1 TB HDD SAS, striping with parity); in removable drive bay, for hot swapping; at the front; with hardware RAID controller (PCIe x8; 2 slots occupied) incl. ZMCP module			**K**							
• RAID 5, 2 TB (3 × 1 TB HDD SAS, striping with parity) + 1 TB HDD SAS as hot spare; in removable drive bay, for hot swapping; at the front; with hardware RAID controller (PCIe x8; 2 slots occupied) incl. ZMCP module			**L**							
HDD SATA + SSD										
• RAID 1, 1 TB (2 × 1 TB HDD SATA, data mirroring); 0.5 g vibration, 5 g shock, internal + 240 GB SSD SATA, internal			**M**							
• RAID 1, 1 TB (2 × 1 TB HDD SATA, data mirroring), in removable drive bay, for hot swapping + 240 GB SSD (eMLC) SATA, in removable drive bay; at the front			**N**							
• RAID 1, 1 TB (2 × 1 TB HDD SAS, data mirroring); in removable drive bay, for hot swapping; at the front; with hardware RAID controller (PCIe x8; 2 slots occupied) incl. ZMCP module + 240 GB SSD (eMLC) SATA; in removable drive bay, at the front			**P**							
• RAID 5, 2 TB (3 × 1 TB HDD SAS, striping with parity); in removable drive bay, for hot swapping; at the front; with hardware RAID controller (PCIe x8; 2 slots occupied) incl. ZMCP module + 240 GB SSD (eMLC) SATA; in removable drive bay, at the front			**Q**							

	Article No.									
SIMATIC PCS 7 Industrial Workstation For OS server	**6ES7660-**									
SIMATIC IPC847D industrial PC	**6**	■	■	■	■	**-**	**2**	**E**	■	■
Windows Server 2012 R2 Standard Edition operating system, 64-bit, incl. 5 CAL, multi-language (English, German, French, Italian, Spanish, Chinese), and SIMATIC PCS 7 V8.2 preinstalled										
SSD										
• 240 GB SSD (eMLC) SATA; internal		**R**								
• 480 GB SSD (eMLC) SATA; internal		**S**								
• 240 GB SSD (eMLC) SATA, in removable drive bay; at the front		**T**								
• 480 GB SSD (eMLC) SATA, in removable drive bay; at the front		**U**								
• RAID 1, 240 GB (2 × 240 GB) SSD (eMLC), SATA, data mirroring; in removable drive bay; for hot swapping; at the front		**V**								
• RAID 1, 480 GB (2 × 480 GB) SSD (eMLC), SATA, data mirroring; in removable drive bay; for hot swapping; at the front		**W**								
Main memory										
• 8 GB DDR3 SDRAM (2 × 4 GB), dual channel			**1**							
• 16 GB DDR3 SDRAM (2 × 8 GB), dual channel			**2**							
• 32 GB DDR3 SDRAM (4 × 8 GB), dual channel			**3**							
• 8 GB DDR3 SDRAM (2 × 4 GB), ECC, dual channel			**5**							
• 16 GB DDR3 SDRAM (2 × 8 GB), ECC, dual channel			**6**							
• 32 GB DDR3 SDRAM (4 × 8 GB), ECC, dual channel			**7**							
Communication with plant bus										
• BCE				**0**						
• Industrial Ethernet (CP 1623)				**1**						
• Without additional communication modules				**8**						
Interfaces on bus module/swap Media/ multi-monitor option										
Bus module with 3 × PCI, 3 × PCIe x4, 5 × PCIe x16										
• Without optical drive										
- Without multi-monitor mode								**A**		
- Multi-monitor mode for 2 screens[1]								**B**		
- Multi-monitor mode for 4 screens[2]								**C**		
• With DVD±RW (slim)										
- Without multi-monitor mode								**D**		
- Multi-monitor mode for 2 screens[1]								**E**		
- Multi-monitor mode for 4 screens[2]								**F**		
Power supply unit, country-specific version										
• 100 ... 240 V AC industrial power supply to NAMUR										
- Power cord for Europe									**0**	
- Power cord for the UK									**1**	
- Power cord for Switzerland									**2**	
- Power cord for the USA									**3**	
- Power cord for Italy									**4**	
- Power cord for China									**5**	
• 2 × 100 ... 240 V AC, redundant power supply; without power supply cord									**6**	

[1] Incl. 1 adapter cable (DisplayPort to DVI-D)

[2] Incl. PCIe x16 graphics card

Ordering data (continued)

SIMATIC PCS 7 Industrial Workstations of the type IPC847D as replacement part

Without hardware expansions, software pre-installation, system software licenses, restore DVDs

Replacement for ES/OS single station or OS server of the type IPC847D

	Article No.										
SIMATIC PCS 7 Industrial Workstation as replacement part	**6ES7660-**										
Industrial PC SIMATIC IPC847D without pre-installation, without SIMATIC PCS 7 restore DVDs	**6**	■	■	■	■	**-**	**8**	■	■	■
Processor and system type										
• Core i3-4330TE (2C/4T, 2.40 GHz, 4 MB cache), replacement part		**W**								
• Core i5-4570TE (2C/4T, 2.70 GHz, 4 MB cache, TB, VT-d, AMT), replacement part		**X**								
• Xeon E3-1268L v3 (4C/8T, 2.30 GHz, 8 MB cache, TB, VT-d, AMT), replacement part		**Y**								
Hard disks and solid-state drives										
with SATA hard disk (HDD)										
• 500 GB HDD SATA, 0.5 g vibration, 5 g shock; internal			**A**							
• 1 TB HDD SATA, 0.5 g vibration, 5 g shock; internal			**B**							
• RAID 1, 1 TB (2 × 1 TB HDD SATA, data mirroring); 0.5 g vibration, 5 g shock; internal			**C**							
• 500 GB HDD SATA, in removable drive bay; at the front			**D**							
• 1 TB HDD SATA, in removable drive bay, at the front			**E**							
• RAID 1, 1 TB (2 × 1 TB HDD SATA, data mirroring); in removable drive bay, for hot swapping; at the front			**F**							
• RAID 1, 1 TB (2 x 1 TB HDD SATA, data mirroring) + 1 TB HDD SATA as hot spare; in removable drive bay, for hot swapping; at the front			**G**							
• RAID 1, 1 TB (2 × 1 TB HDD SAS, data mirroring); in removable drive bay, for hot swapping; at the front; with hardware RAID controller (PCIe x8; 2 slots occupied) incl. zero-maintenance cache protection (ZMCP) module			**H**							
• RAID 5, 2 TB (3 × 1 TB HDD SAS, striping with parity); in removable drive bay, for hot swapping; at the front; with hardware RAID controller (PCIe x8; 2 slots occupied) incl. ZMCP module			**K**							
• RAID 5, 2 TB (3 × 1 TB HDD SAS, striping with parity) + 1 TB HDD SAS as hot spare; in removable drive bay, for hot swapping; at the front; with hardware RAID controller (PCIe x8; 2 slots occupied) incl. ZMCP module			**L**							
HDD SATA + SSD										
• RAID 1, 1 TB (2 × 1 TB HDD SATA, data mirroring); 0.5 g vibration, 5 g shock, internal + 240 GB SSD SATA; in removable drive bay, at the front			**M**							
• RAID 1, 1 TB (2 × 1 TB HDD SATA, data mirroring), in removable drive bay, for hot swapping + 240 GB SSD (eMLC) SATA, in removable drive bay; at the front			**N**							
• RAID 1, 1 TB (2 × 1 TB HDD SAS, data mirroring); in removable drive bay, for hot swapping; at the front; with hardware RAID controller (PCIe x8; 2 slots occupied) incl. ZMCP module + 240 GB SSD (eMLC) SATA; in removable drive bay, at the front			**P**							
• RAID 5, 2 TB (3 × 1 TB HDD SAS, striping with parity); in removable drive bay, for hot swapping; at the front; with hardware RAID controller (PCIe x8; 2 slots occupied) incl. ZMCP module + 240 GB SSD (eMLC) SATA; in removable drive bay, at the front			**Q**							
SSD										
• 240 GB SSD (eMLC) SATA; internal			**R**							
• 480 GB SSD (eMLC) SATA; internal			**S**							
• 240 GB SSD (eMLC) SATA, in removable drive bay; at the front			**T**							
• 480 GB SSD (eMLC) SATA, in removable drive bay; at the front			**U**							
• RAID 1, 240 GB (2 × 240 GB) SSD (eMLC), SATA, data mirroring; in removable drive bay; for hot swapping; at the front			**V**							
• RAID 1, 480 GB (2 × 480 GB) SSD (eMLC), SATA, data mirroring; in removable drive bay; for hot swapping; at the front			**W**							

	Article No.										
SIMATIC PCS 7 Industrial Workstation as replacement part	**6ES7660-**										
Industrial PC SIMATIC IPC847D without pre-installation, without SIMATIC PCS 7 restore DVDs	**6**	■	■	■	■	**-**	**8**	■	■	■
Main memory										
• 8 GB DDR3 SDRAM (2 × 4 GB), dual channel				**1**						
• 16 GB DDR3 SDRAM (2 × 8 GB), dual channel				**2**						
• 32 GB DDR3 SDRAM (4 × 8 GB), dual channel				**3**						
• 8 GB DDR3 SDRAM (2 × 4 GB), ECC, dual channel				**5**						
• 16 GB DDR3 SDRAM (2 × 8 GB), ECC, dual channel				**6**						
• 32 GB DDR3 SDRAM (4 × 8 GB), ECC, dual channel				**7**						
Communication with plant bus										
• BCE					**0**					
• Industrial Ethernet (CP 1623)					**1**					
• Without additional communication modules					**8**					
Operating system										
• Windows 7 Ultimate, 64-bit, multi-language (English, German, French, Italian, Spanish, Chinese)								**A**		
• Windows Server 2008 R2 Standard Edition incl. 5 CAL, 64-bit, multi-language (English, German, French, Italian, Spanish, Chinese)								**D**		
• Windows Server 2012 R2 Standard Edition incl. 5 CAL, 64-bit, multi-language (English, German, French, Italian, Spanish, Chinese)								**E**		
• Without operating system								**X**		
Interfaces on bus module/swap Media/ multi-monitor option										
Bus module with 3 × PCI, 3 × PCIe x4, 5 × PCIe x16										
• Without optical drive										
- Without multi-monitor mode									**A**	
- Multi-monitor mode for 2 screens[1]									**B**	
- Multi-monitor mode for 4 screens[2]									**C**	
• With DVD±RW (slim)										
- Without multi-monitor mode									**D**	
- Multi-monitor mode for 2 screens[1]									**E**	
- Multi-monitor mode for 4 screens[2]									**F**	
Power supply unit, country-specific version										
• 100 ... 240 V AC industrial power supply to NAMUR										
- Power cord for Europe										**0**
- Power cord for the UK										**1**
- Power cord for Switzerland										**2**
- Power cord for the USA										**3**
- Power cord for Italy										**4**
- Power cord for China										**5**
• 2 × 100 ... 240 V AC, redundant power supply; without power supply cord										**6**

[1] Incl. 1 adapter cable (DisplayPort to DVI-D)

[2] Incl. PCIe x16 graphics card

Ordering data

Additional and expansion components

	Article No.
SIMATIC PC keyboard (USB connection) German/international key assignment	**6ES7648-0CB00-0YA0**
SIMATIC HMI USB mouse Optical mouse with scroll wheel and USB connection, color anthracite	**6AV2181-8AT00-0AX0**
Memory expansion	
• 2 GB DDR3 SDRAM (1 × 2 GB)	**6ES7648-2AJ50-0MA0**
• 4 GB DDR3 SDRAM (1 × 4 GB)	**6ES7648-2AJ60-0MA0**
• 4 GB DDR3 SDRAM with ECC (1 × 4 GB)	**6ES7648-2AJ60-1MA0**
• 8 GB DDR3 SDRAM (1 × 8 GB)	**6ES7648-2AJ70-0MA0**
• 8 GB DDR3 SDRAM with ECC (1 × 8 GB)	**6ES7648-2AJ70-1MA0**
Tower kit for SIMATIC PCS 7 Industrial Workstations Tower kit for conversion of a Rack PC into an industrial tower PC	**6ES7648-1AA00-0XD0**
Retainer for locking the internal USB port	**6ES7648-1AA00-0XK0**
Rack unit for low-profile removable drive bay for 3.5" hard drive (SATA/SAS) or 2.5" SSD (SATA), without drive	**6ES7648-0EG01-1BA0**
Filter mats for SIMATIC IPC847D (packing unit: 10 units)	**A5E01064980**

	Article No.
Adapter cable	
• DisplayPort to DVI-D for onboard graphics	**6ES7648-3AF00-0XA0**
• DisplayPort to VGA for onboard graphics	**6ES7648-3AG00-0XA0**
• DVI-I to VGA for onboard graphics, 250 mm long	**6ES7648-3AB00-0XA0**
3 m power cord for Rack PC[1]	
• Europe (for Austria, Belgium, Finland, France, Germany, the Netherlands, Spain, Sweden)	**6ES7900-0AA00-0XA0**
• For UK	**6ES7900-0BA00-0XA0**
• For Switzerland	**6ES7900-0CA00-0XA0**
• For the USA	**6ES7900-0DA00-0XA0**
• For Italy	**6ES7900-0EA00-0XA0**
• For China	**6ES7900-0FA00-0XA0**
SIMATIC NET HARDNET IE S7 REDCONNECT PowerPack For communication with high availability AS systems, see Chapter "Communication", Section "Industrial Ethernet – system connection of PCS 7 systems", page 10/47	

[1] The SIMATIC PCS 7 preferred types are delivered as standard with a "European power cable". The country-specific versions listed above are required for some countries.

Accessories

Power supply cord for Rack PC

The SIMATIC PCS 7 preferred types are always delivered with a "European power supply cord". This can be used in Germany, France, Spain, Netherlands, Belgium, Sweden, Austria and Finland.

The country-specific versions listed in the Ordering data are required for other countries. The following picture shows the design of a number of power supply plugs:

Country-specific power supply cords for Rack PC

Tower Kit for IPC847D

The Tower Kit enables conversion of a SIMATIC PCS 7 Industrial Workstation with rack PC design to an industrial tower PC.
A Tower Kit can be ordered as an accessory for the SIMATIC PCS 7 Industrial Workstation IPC847D.

Tower Kit for IPC847D

Overview

The SIMATIC PCS 7 BOX OS Client 627D based on the SIMATIC Box PC of type SIMATIC IPC627D can be used within the SIMATIC PCS 7 process control system as OS Client or SIMATIC BATCH client. For these applications it is an alternative to clients based on a SIMATIC Microbox PC or SIMATIC Rack PC.

With its compact and sturdy metal enclosure, the SIMATIC PCS 7 BOX OS Client 627D with a comparable interface configuration is slightly larger than a client on the basis of the SIMATIC Microbox PC. In return, it is additionally equipped with a DVD drive and two free slots for expansion modules.

Design

The SIMATIC IPC627D Industrial PC serves as platform for the SIMATIC PCS 7 BOX OS Client 627D. In accordance with its CE marking it can be used in industrial environments as well as in domestic, business and commercial environments.

The IPC627D based on Intel Core i3 or Xeon processor technology has the following particularly impressive properties and equipment features:

- Stable platform available for a period of about 5 years with embedded Intel components (spare parts supply and repairs for approx. 5 years)
- Rugged metal enclosure with IP20 degree of protection with high electromagnetic compatibility.
- Powerful and energy-saving Intel multi-core processors with XEON E3 or Core i3
- Powerful Intel graphics controller HD Graphics 4600 onboard, integrated in the processor:
  - 2 digital interfaces DVI-I and DisplayPort (DVI-D via DisplayPort DVI adapter)
  - Analog VGA connection via DVI-I adapter to VGA or DisplayPort to VGA
- Support of multi-monitor mode with two process monitors via onboard graphics:
  - 1 × process monitor at DVI-I connection
  - 1 × process monitor at DisplayPort via DisplayPort to DVI-D adapter cable
- Alternative design version of panel front: SIMATIC PCS 7 BOX with fixed 22" TFT display with touch screen, resolution 1920 × 1080
- Flexible installation in various positions with mounting brackets or portrait installation kits
- High shock/vibration resistance in all possible mounting positions
- Variable power supply: 24 V DC or 110/230 V AC (100 to 240 V)
- Maximum processor performance up to an ambient temperature of 55 °C
- Integrated drives:
  - 1 × SATA 3.5" (HDD) hard disk or SATA 2.5" (SSD) solid-state drive
  - 1 × optical drive SATA DVD±R/RW
- Certification for worldwide marketing (cULus)
- Fast restoration of the delivery state with supplied restore DVD

Interfaces

- 4 × USB 3.0 (SuperSpeed) external
- 1 × USB 3.0 (SuperSpeed) external, on front (Panel Front design version only)
- 1 × USB 3.0 (SuperSpeed) internal, e.g. for ASIA license key, hardlock USB
- 1 × COM1 (RS 232)
- 1 × DVI-I interface (DVI/VGA combined; VGA via adapter cable)
- 1 × DisplayPort (DVI-D or VGA via adapter cable)
- 2 × Ethernet 10/100/1000 Mbps (RJ45)
- 1 × PCI-Express x16 (185 mm) and 1 × PCI (185 mm), vacant for expansions

Design (continued)

SIMATIC PCS 7 BOX with Panel Front, side and front views

Design versions/expandability

The SIMATIC PCS 7 BOX in standard design is a compact computing unit with HMI devices (mouse, keyboard, process monitor) that can be ordered separately and are connected by means of integrated ports/interfaces.

The device is equipped with four USB 3.0 ports for mouse and keyboard as well as additional USB input/output devices, e.g. chip card reader USB.

Two process monitors can be controlled in multi-monitor mode via the integrated digital graphic interfaces DVI-I and DVI-D (via adapter cable at the DisplayPort). The selection of the process monitors depends on the technical data of the integrated graphics as well as the image formats and resolutions which can be adjusted in the project editor of the OS software (see section "Operator System, OS Software, Introduction", page 5/5).

As an alternative to the SIMATIC PCS 7 BOX in standard design, we are offering a built-in unit with Panel Front according to SIMATIC IPC677D which can be mounted in mounting cutouts of control cabinets, enclosures or consoles as well as on swivel arms.

With the built-in unit, a panel with 22" TFT display and touch screen is permanently connected with the computing unit. The 22" TFT display supports a resolution of 1920 × 1080 pixels. An additional USB 3.0 port for connection of external I/O devices is available on the panel front on the left below the display.

Diagnostics

- Integrated diagnostic displays (4 dual-color LEDs for status display of the operating state)
- Monitoring and diagnostics functions available in combination with the SIMATIC IPC DiagMonitor diagnostics software for:
  - Temperatures
  - Backup battery voltage
  - HDD/SSD status (S.M.A.R.T.)
  - System status (Watchdog)
  - Fan speed
  - Operating hours counter

Pre-installed software

The following software is pre-installed on the SIMATIC PCS 7 BOX OS Client 627D on delivery:

- Operating system Windows 7 Ultimate 64-bit, multi-language (English, German, French, Italian, Spanish, Chinese)
- SIMATIC PCS 7 OS Software Client V8.2
- SIMATIC IPC DiagMonitor diagnostics software

Note

In contrast to usual practice, the license of the SIMATIC PCS 7 OS Software Client for the SIMATIC PCS 7 BOX OS Clients is no longer included in the scope of delivery. As with the SIMATIC PCS 7 Industrial Workstations in rack version, they must now be purchased separately.

Technical specifications

SIMATIC IPC627D, SIMATIC PCS 7 BOX OS Client 627D version	Standard design	Panel front design
Design and equipment features		
Design	Rack-mountable device with sturdy metal enclosure, suitable for wall and portrait mounting	Rack-mounted device with rugged metal enclosure and Panel Front, suitable for mounting in control cabinets, enclosures, consoles and on swivel arms; max. mounting angle ±20° from the vertical
Degree of protection	IP20	Computer unit and rear of panel IP20; panel front: IP65
Processor (alternatively)	• Intel Xeon E3-1268L v3, 4 cores, 8 threads, 2.3 (3.3) GHz, GT2, 8 MB cache, Turbo Boost, VT-d, iAMT • Intel Core i3-4330TE, 2 cores, 4 threads, 2.4 GHz, GT2, 4 MB cache, VT-x	
Chipset	Intel C226 (DH82C226 PCH)	
Main memory		
• Type	DDR3-1600 SDRAM (PC3-12800) DIMM	
• Maximum configuration	16 GB DDR3 SDRAM (2 sockets)	
• Standard configuration	8 GB DDR3 SDRAM	
Graphics		
• Graphic controller	Onboard Intel graphics controller HD Graphics P4600; 2-D and 3-D engine integrated in processor	
• Graphics memory	Dynamic Video Memory (uses up to 512 MB RAM)	
• Resolutions, frequencies, colors of the onboard graphics		
- DVI	1920 × 1200 at 60 Hz, 24-bit color depth	
- Display port	3840 × 2160 at 130 Hz, 30-bit color depth	
• Color display (panel front)	–	22" TFT display with touch screen
- Resolution (W × H in pixels)	–	1920 × 1080
- Luminance (cd/m²), up to	–	400
- Horizontal/vertical viewing angle	–	170°/170°
- MTBF LED backlight	–	80 000 h
Free expansion slots	1 × PCI (185 mm) 1 × PCI Express x16 (185 mm)	
Drives		
• Hard disk (HDD)/Solid State Drive (SSD)	1 × HDD 3.5" SATA, 250 GB or 1 × SSD 2.5" SATA, 240 GB	
• Optical drive	1 × Slimline SATA DVD±R/RW	
Interfaces		
Ethernet	2 × 10/100/1000 Mbps (RJ45), Intel WGI217LM (AMT interface) and Intel WGI210IT	
USB		
• External	4 × USB 3.0 (max. 2 high-current ports at the same time)	4 × USB 3.0 (max. 2 high-current ports at the same time) 1 x USB 3.0 high-current port on the front panel
• Internal	1 × USB 3.0 high-current for internal USB flash drive/dongle	
Serial	1 × COM1 (V.24), 9-pin sub-D connector	
Parallel	–	
Graphics connection	• 1 × DVI-I (DVI/VGA combined) • 1 × DisplayPort	
Keyboard, mouse	Connectable via USB (keyboard and mouse not included in scope of delivery)	
Operating system and diagnostics software		
Operating system	Windows 7 Ultimate 64-bit operating system, multi-language (English, German, French, Italian, Spanish, Chinese), pre-installed on hard disk and enclosed on restore DVD, no activation required	
System-tested SIMATIC industrial software	SIMATIC IPC DiagMonitor	
Monitoring and diagnostics functions		
Display elements	4 × dual-color LEDs for status display of the operating state: PC ON/WD (watchdog), RUN/STOP, ERROR, MAINT	
SIMATIC IPC DiagMonitor diagnostics software		
• Temperature (overtemperature/undertemperature)	• Processor temperature • Temperature close to the RAM chips • Temperature of the basic module	
• Battery voltage	Backup battery	
• Storage Media	Monitoring of HDD /SSD with S.M.A.R.T functionality	
• Watchdog	System monitoring; possible reactions: Hardware or software reset	
• Fans	Monitoring of the fan speed	
• Operating hours counter	Information about the total runtime	

Technical specifications (continued)

SIMATIC IPC627D, SIMATIC PCS 7 BOX OS Client 627D version	Standard design	Panel front design
Safety		
Protection class	Protection class I compliant with IEC 61140	
Safety directives	EN 60950-1; UL60950-1 CAN/CSA C22.2 No 60950-1-07 UL508 CSA C22.2 No 142	EN 60950-1 UL508 CSA C22.2 No 142
Noise emission		
Operation	< 55 dB(A) according to EN ISO 7779	
Electromagnetic compatibility (EMC)		
Interference emission	EN 61000-6-3 EN 61000-6-4 CISPR22 Class B FCC Class A	EN 61000-6-3 EN 61000-6-4 CISPR22 Class A FCC Class A
Immunity to conducted interference on the supply lines	±2 kV (according to IEC 61000-4-4; burst) ±1 kV (according to IEC 61000-4-5; symmetrical surge) ±2 kV (according to IEC 61000-4-5; asymmetrical surge)	
Immunity to interference on signal lines	±1 kV (according to IEC 61000-4-4; burst; length < 3 m) ±2 kV (according to IEC 61000-4-4; burst; length > 3 m) ±2 kV (according to IEC 61000-4-5; surge; length > 30 m)	
Immunity to static discharge	±6 kV contact discharge (according to IEC 61000-4-2) ±8 kV air discharge (according to IEC 61000-4-2)	
Immunity to high-frequency radiation	10 V/m, 80 ... 1 000 MHz and 1.4 ... 2 GHz, 80 % AM (to IEC 61000-4-3) 3 V/m, 2 ... 2.7 GHz, 80 % AM (to IEC 61000-4-3) 10 V/m, 10 kHz ... 80 MHz, 80 % AM (to IEC 61000-4-6)	
Immunity to magnetic fields	100 A/m, 50/60 Hz (according to IEC 61000-4-8)	
Climatic conditions		
Temperature	Tested according to IEC 60068-2-1, IEC 60068-2-2, IEC 60068-2-14	
• Operation	• +5 ... +45 °C (with DVD writer, only up to +40 °C) • +5 ... +50 °C (power USB and PCI/PCIe expansions max. 20 W) • +5 ... +55 °C (power USB and PCI/PCIe expansions max. 10 W)	• Horizontal, vertical installation: +5 ... +45 °C (with DVD writer, only up to +40 °C) • Horizontal, angled installation: +5 ... +40 °C (power USB and PCI/PCIe expansions max. 30 W; no DVD operation) • Vertical, vertical installation: +5 ... +45 °C (power USB and PCI/PCIe expansions max. 30 W; no DVD operation)
• Storage/transport	-20 … +60 °C	
• Gradient		
- Operation	Max. 10 °C/h	
- Storage	20 °C/h, no condensation	
Relative humidity	Tested according to IEC 60068-2-78, IEC 60068-2-30	
• Operation	5 ... 80 % at 25 °C (no condensation)	
• Storage/transport	5 ... 95 % at 25 °C (no condensation)	
Atmospheric pressure		
• Operation	1 080 to 795 hPa (corresponds to an altitude of -1 000 to 2 000 m)	
• Storage/transport	1 080 to 660 hPa (corresponds to an altitude of -1 000 to 3 500 m)	
Mechanical environmental conditions		
Vibrations	Tested according to IEC 60068-2-6	
• Operation	10 … 58 Hz: 0.075 mm, 58 to 500 Hz: 9.8 m/s²	
- Limitation with DVD writer	10 … 58 Hz: 0.019 mm, 58 to 500 Hz: 2.5 m/s²	
- Limitation with portrait assembly	10 … 58 Hz: 0.0375 mm, 58 to 500 Hz: 4.9 m/s²	–
• Storage/transport	5 … 9 Hz: 3.5 mm, 9 to 500 Hz: 9.8 m/s²	
Shock resistance	Tested according to IEC 60068-2-27, IEC 60068-2-29	
• Operation	50 m/s², 30 ms	
- Limitation with portrait assembly	25 m/s², 30 ms	–
• Storage/transport	250 m/s², 6 ms	

Technical specifications (continued)

SIMATIC IPC627D, SIMATIC PCS 7 BOX OS Client 627D version	Standard design	Panel front design
Standards, specifications		
CE - Residential, business and commercial operations, and small businesses		
• Interference emission	EN 61000-6-3: 2007 +A1:2011	–
• Noise immunity	EN 61000-6-1: 2007	–
CE industrial environment		
• Interference emission	EN 61000-6-4: 2007 +A1:2011	EN 61000-6-4: 2007
• Noise immunity	EN 61000-6-2: 2005	EN 61000-6-2: 2005
Certificates and approvals		
Quality assurance system according to ISO 9001:2008	According to DQS certificate 001323 QM08	
cULus	Underwriters Laboratories (UL) complying with standard UL 60950-1, CAN/CSA-C22.2 No. 60950-1 (I.T.E), UL 508 and CAN/CSA-C22.2 No. 142 (IND.CONT.EQ)	Underwriters Laboratories (UL) complying with standard UL 508 and CAN/CSA-C22.2 No. 142 (IND.CONT.EQ)
FCC USA	FCC Rules, Part 15, Class A	
Canada	ICES-003, Class B; NMB-003, Class B	ICES-003, Class A; NMB-003, Class A
Australia/New Zealand	EN 61000-6-3:2007	EN 61000-6-4:2007
Korea	Korean Certification (KC Mark)	
Power supply		
Supply voltage (AC)	Nominal 100 … 240 V AC (-15 %/+10 %), wide range	
Supply voltage (DC)	Nominal 24 V DC (-20 %/+20 %), SELV, isolated	
AC input current	Continuous current up to 1.7 A (up to 50 A for 1 ms at startup)	
DC input current	Continuous current up to 7.1 A (up to 14 A for 30 ms at startup)	
Brief voltage interruption according to NAMUR	Max. 20 ms (at 0.85 rated voltage) (max. 10 events per hour; recovery time of at least 1 s)	
Max. power consumption		
• Active power (AC/DC)	176 W	
• Apparent power (AC)	190 VA	
Max. current output (+12 V DC)	12.5 A	
Dimensions and weights		
External dimensions including DVD writer (W × H × D in mm)	312 × 267 × 105	560 × 380 × 139 (148 incl. front USB port)
Mounting cutout (W × H in mm)	–	541 × 362
Mounting depth including DVD writer (D in mm)	–	133
Weight	Approx. 7 kg	Approx. 16 kg
System software and licenses (included in product package)		
SIMATIC PCS 7 BOX OS Client	SIMATIC PCS 7 OS Software Client V8.2	
Restore DVDs/preinstallation		
• Restore DVD 1	Windows 7 Ultimate 64-bit operating system with default settings for optimized SIMATIC PCS 7 operation	
• Restore DVD 2	Windows 7 Ultimate 64-bit operating system plus software installation for SIMATIC PCS 7 BOX operation (corresponds to preinstallation)	

Ordering data

SIMATIC PCS 7 BOX OS Client 627D

	Article No.									
SIMATIC PCS 7 BOX OS Client System Type: SIMATIC IPC627D, equipped with 2 × 10/100/1000 Mbps Ethernet RJ45; graphics onboard, 4 × USB 3.0; 1 × serial (COM1); 1 × PCI, 1 × PCIe (X16) SIMATIC PCS 7 Software V8.2 preinstalled Windows 7 Ultimate 64-bit operating system, multi-language (English, German, French, Italian, Spanish, Chinese) Without additional communications interfaces	**6ES7650-**									
	4	**B**	■	**8**	**1**	**-**	**2**	**Q**	■	■
Processor and storage Media										
• Intel Core i3-4330TE processor (2 cores/ 4 threads, 2.4 GHz, 4 MB cache, VT-x); main memory 8 GB, DDR3 1600, DIMM; 250 GB SATA; DVD±R/RW			**A**							
• Xeon E3-1268Lv3 processor (4 cores/8 threads, 2.3 (3.3) GHz, 8 MB cache, VT-d, AMT); main memory 8 GB DDR3 1600, DIMM; 240 GB SSD; DVD±R/RW			**B**							
Panel Front										
• without panel								**A**		
• 22" Single Touch, 1920 × 1080 pixels								**B**		
Power supply, country-specific power supply cable										
• 110/230 V AC industrial power supply to NAMUR;										
- Power cord for Europe									**0**	
- Power cord for the UK									**1**	
- Power cord for Switzerland									**2**	
- Power cord for the USA									**3**	
- Power cord for Italy									**4**	
- Power cord for China									**5**	
• 24 V DC industrial power supply									**6**	

SIMATIC PCS 7 BOX 627D as a spare part

The configuration table below for spare part systems is not only intended for the SIMATIC PCS 7 BOX OS Client 627D, but for all system variants of the SIMATIC PCS 7 BOX 627D.

	Article No.									
SIMATIC PCS 7 BOX System as a spare part Type: SIMATIC IPC627D without pre-installation, without SIMATIC PCS 7 restore DVDs, equipped with 2 × 10/100/1000 Mbps Ethernet RJ45; graphics onboard, 4 × USB 3.0; 1 × serial (COM1); 1 × PCI, 1 × PCIe (X16)	**6ES7650-**									
	4	**B**	■	■	■	**-**	**8**	**X**	■	■
Processor and storage Media										
• Intel Core i3-4330TE processor (2 cores/ 4 threads, 2.4 GHz, 4 MB cache, VT-x); main memory 8 GB, DDR3 1600, DIMM; 250 GB SATA; DVD±R/RW			**A**							
• Xeon E3-1268Lv3 processor (4 cores/8 threads, 2.3 (3.3) GHz, 8 MB cache, VT-d, AMT); main memory 8 GB DDR3 1600, DIMM; 240 GB SSD; DVD±R/RW			**B**							
• Xeon E3-1268Lv3 processor (4 cores/8 threads, 2.3 (3.3) GHz, 8 MB cache, VT-d, AMT); main memory 8 GB DDR3 1600, DIMM, ECC; RAID1, 2 × 320 GB SATA (2.5"); DVD±R/RW			**C**							
Communication interfaces										
• PROFIBUS onboard (CP 5622 compatible)				**0**						
• PROFINET onboard (CP 1616 compatible)				**1**						
• Without additional communication modules				**8**						
Operating system										
• Windows 7 Ultimate 32-bit, multi-language (English, German, French, Italian, Spanish, Chinese)					**0**					
• Windows 7 Ultimate 64-bit, multi-language (English, German, French, Italian, Spanish, Chinese)					**1**					
• Without operating system					**8**					
Panel Front										
• without panel									**A**	
• 22" Single Touch, 1920 × 1080 pixels									**B**	
Power supply, country-specific power supply cable										
• 110/230 V AC industrial power supply to NAMUR										
- Power cord for Europe										**0**
- Power cord for the UK										**1**
- Power cord for Switzerland										**2**
- Power cord for the USA										**3**
- Power cord for Italy										**4**
- Power cord for China										**5**
• 24 V DC industrial power supply										**6**

Ordering data (continued)

Additional and expansion components

SIMATIC PC keyboard German/international with USB connection	**6ES7648-0CB00-0YA0**
SIMATIC HMI USB mouse Optical mouse with scroll wheel and USB connection, color anthracite	**6AV2181-8AT00-0AX0**
Memory expansion	
• 2 GB DDR3 1600 SDRAM, DIMM	**6ES7648-2AJ50-0MA0**
• 4 GB DDR3 1600 SDRAM, DIMM	**6ES7648-2AJ60-0MA0**
• 8 GB DDR3 1600 SDRAM, DIMM	**6ES7648-2AJ70-0MA0**
• 8 GB DDR3 1600 SDRAM, DIMM, ECC	**6ES7648-2AJ70-1MA0**
Adapter cable	
• DisplayPort to DVI-D for onboard graphics	**6ES7648-3AF00-0XA0**
• DisplayPort to VGA for onboard graphics	**6ES7648-3AG00-0XA0**
• DVI-I to VGA for onboard graphics, 250 mm long	**6ES7648-3AB00-0XA0**
SIMATIC IPC power cable for Box PC and Panel PC, 230 V AC, angled, 3 m	
• for Germany, France, Spain, the Netherlands, Belgium, Sweden, Austria, Finland	**6ES7900-1AA00-0XA0**
• For UK	**6ES7900-1BA00-0XA0**
• For Switzerland	**6ES7900-1CA00-0XA0**
• For USA	**6ES7900-1DA00-0XA0**
• For Italy	**6ES7900-1EA00-0XA0**
• For China	**6ES7900-1FA00-0XA0**

Accessories

Portrait assembly kit	
• Kit 1: Interfaces to the front	**6ES7648-1AA10-1YB0**
• Kit 2: Interfaces upward/downward	**6ES7648-1AA10-1YA0**

Accessories

Portrait installation kit

As an alternative to installation with mounting brackets, the portrait assembly kit allows for space-saving installation of the SIMATIC PCS 7 BOX OS Client (standard design without Panel Front). The portrait assembly kit is available in two versions:

- Kit 1: Portrait assembly with interfaces to the front
- Kit 2: Portrait assembly with interfaces on top or bottom

Together with the kit, the SIMATIC PCS 7 BOX OS Client occupies a mounting depth of 365 mm (Kit 1) or 279 mm (Kit 2) in the standard design. The limitations associated with portrait assembly regarding vibration and shock resistance are relatively small (see technical specifications).

Since all interfaces are accessible from the front when using Kit 1, this type of assembly is particularly suitable for commissioning and servicing.

Please observe the information on operation planning and device installation in the manual of the SIMATIC IPC627D in conjunction with the use of portrait assembly kits.

Overview

SIMATIC IPC427D and SIMATIC IPC477D family

Clients based on the rugged SIMATIC Microbox PC can be used within the SIMATIC PCS 7 process control system in the operator system and in SIMATIC BATCH. With their compact design, they are a space-saving alternative to clients based on a SIMATIC BOX PC or SIMATIC Rack PC for these applications. However, the numbers of expansion options and interfaces are comparatively lower.

Two designs are available:

- SIMATIC PCS 7 OS Client 427D
  computing unit (without monitor) in compact metal enclosure, suitable for mounting rail and wall mounting, optional installation with portrait mounting kit
- SIMATIC PCS 7 OS Client 477D
  built-in unit, consisting of 22" TFT Touch Panel with integrated computing unit, suitable for installation in mounting cutouts, e.g. in consoles or cabinets

Both designs are available with hard disk as well as solid state drive. Due to their exceptional physical properties, both versions are suitable for maintenance-free 24/7 operation without the support of a fan.

For the SIMATIC PCS 7 OS Client 427D, visualization of a project/subproject can be distributed to two process monitors connected to the onboard interfaces in multi-monitor mode. For the SIMATIC PCS 7 OS Client 477D, process control takes place primarily via the integrated 22" display.

Technical specifications

Comparison of SIMATIC PCS 7 OS Clients 427D and 477D

SIMATIC PCS7 OS Clients based on Microbox		
Types	**SIMATIC PCS 7 OS Client 427D**	**SIMATIC PCS 7 OS Client 477D**
Design and equipment features		
Design	• Compact Microbox PC without panel • DIN rail or wall mounting; horizontal (preferred) or vertical • Portrait mounting; vertical	• Compact Panel PC, consisting of 22" TFT Touch Panel with integrated computing unit • Built-in unit for installation in mounting cutouts, e.g. in consoles or cabinets; in landscape format (vertical or max. ± 45° vertical incline) • Fastening with mounting clips or mounting brackets
Degree of protection in accordance with IEC 60529	IP20	IP65 front; IP20 rear (enclosure)
CPU • Processor • Second Level Cache	 Intel Core i7-3517UE 1.7 GHz 4 MB	 Intel Core i7-3517UE 1.7 GHz 4 MB
Main memory (module up to 8 GB operable without/with ECC)	4 GB DDR3-SDRAM 1066 (1 SO-DIMM module without ECC)	4 GB DDR3-SDRAM 1066 (1 SO-DIMM module without ECC)
Graphic • Graphic controller • Graphics memory • Resolutions/frequencies (digital) - DVI-I - Display port (DPP) • Color display - Resolution - Half brightness lifetime	 Intel HD4000 integrated in the chipset 32 ... 512 MB shared memory Up to 1920 × 1200, 60 Hz Up to 1920 × 1200, 60 Hz – – –	 Intel HD4000 integrated in the chipset 32 ... 512 MB shared memory Up to 1920 × 1200, 60 Hz Up to 1920 × 1200, 60 Hz 22" Touch Panel with LED backlight 1920 × 1080, 24-bit colors 30 000 h
Storage Media, alternative • Hard disk • Solid State Drive	 1 × 2.5" SATA-HDD 320 GB 1 × 2.5" SATA-SSD 160 GB (eMLC)	 1 × 2.5" SATA-HDD 320 GB 1 × 2.5" SATA-SSD 160 GB (eMLC)
Storage Media, additive • CD-ROM/DVD-RW/diskette	 Connectable via USB (not included in scope of delivery)	 Connectable via USB (not included in scope of delivery)

Technical specifications (continued)

SIMATIC PCS7 OS Clients based on Microbox		
Types	**SIMATIC PCS 7 OS Client 427D**	**SIMATIC PCS 7 OS Client 477D**
Interfaces		
• Ethernet	2 × Ethernet interfaces (RJ45) Intel 82579LM and Intel 82574L; 10/100/1000 Mbps, isolated, teaming-capable	2 × Ethernet interfaces (RJ45) Intel 82579LM and Intel 82574L; 10/100/1000 Mbps, isolated, teaming-capable
• USB	4 × USB 3.0 rear, max. 2 × high-current can be operated simultaneously	4 × USB 3.0 rear, max. 2 × high-current can be operated simultaneously 1 × USB 2.0 front, high current
• Serial	1 × COM1 RS 232, 115 Kbps max., 9-pin D-sub connector	1 × COM1 RS 232, 115 Kbps max., 9-pin D-sub connector
• Parallel	–	–
• Graphics connection	1 × DVI-I (DVI/VGA combined) 1 × display port (DPP); DVI via DPP-to-DVI adapter	1 × DVI-I (DVI/VGA combined) 1 × display port (DPP); DVI via DPP-to-DVI adapter
• Keyboard, mouse	Connectable via USB (keyboard and mouse not included in scope of delivery)	Connectable via USB (keyboard and mouse not included in scope of delivery)
LED displays	• PC ON/WD for power supply and watchdog • L1, L2 and L3 freely programmable by the user	–
Operating system, basic software		
Operating system	Windows 7 Ultimate SP1, 64-bit, multi-language (English, German, French, Italian, Spanish, Chinese)	Windows 7 Ultimate SP1, 64-bit, multi-language (English, German, French, Italian, Spanish, Chinese)
System-tested SIMATIC industrial software	SIMATIC IPC DiagMonitor integrated in pre-installation	SIMATIC IPC DiagMonitor integrated in pre-installation
Monitoring and diagnostics functions		
Watchdog	• Monitoring of program execution • Restart can be parameterized following faults • Monitoring time adjustable in the software	• Monitoring of program execution • Restart can be parameterized following faults • Monitoring time adjustable in the software
Temperature	• Processor • Basic module • Close to RAM (via SIMATIC IPC DiagMonitor and SIMATIC PCS 7 Asset Management)	• Processor • Basic module • Close to RAM (via SIMATIC IPC DiagMonitor and SIMATIC PCS 7 Asset Management)
Storage Media	S.M.A.R.T. functionality	S.M.A.R.T. functionality
Battery monitoring	Status readable via battery status register; remaining life after reaching the warning level at least 1 month	Status readable via battery status register; remaining life after reaching the warning level at least 1 month
Operating hours counter	(via SIMATIC IPC DiagMonitor and SIMATIC PCS 7 Asset Management)	(via SIMATIC IPC DiagMonitor and SIMATIC PCS 7 Asset Management)
Noise emission		
Operating noise	< 40 dB (A) according to DIN 45635-1	< 40 dB (A) according to DIN 45635-1
Electromagnetic compatibility (EMC)		
Interference emission	EN 61000-6-3, EN 61000-6-4, CISPR220 Class B; FCC Class A	EN 61000-6-4; CISPR 22 Class A; FCC Class A
Immunity to conducted interference on the supply cables	±2 kV (according to IEC 61000-4-4; burst) ±1 kV (according to IEC 61000-4-5; symmetrical surge) ±2 kV (according to IEC 61000-4-5; asymmetrical surge)	±2 kV (according to IEC 61000-4-4; burst) ±1 kV (according to IEC 61000-4-5; symmetrical surge) ±2 kV (according to IEC 61000-4-5; asymmetrical surge)
Noise immunity on signal cables	±1 kV (according to IEC 61000-4-4; burst; length < 3 m) ±2 kV (according to IEC 61000-4-4; burst; length > 3 m) ±2 kV (according to IEC 61000-4-5; surge; length > 30 m)	±1 kV (according to IEC 61000-4-4; burst; length < 3 m) ±2 kV (according to IEC 61000-4-4; burst; length > 3 m) ±2 kV (according to IEC 61000-4-5; surge; length > 30 m)
Immunity to static discharge in accordance with IEC 61000-4-2	±6 kV contact discharge ±8 kV air discharge	±6 kV contact discharge at front ±4 kV contact discharge at enclosure rear ±8 kV air discharge
Immunity to radio frequency interference	10 V/m, 80 ... 1 000 MHz and 1.4 ... 2 GHz, 80 % AM to IEC 61000-4-3 1 V/m, 2 ... 2.7 GHz, 80 % AM to IEC 61000-4-3 10 V, 10 kHz ... 80 MHz, 80 % AM to IEC 61000-4-6	10 V/m, 80 ... 1 000 MHz, 80 % AM to IEC 61000-4-3 1 V/m, 2 ... 2.7 GHz 3 V/m, 2 ... 2.7 GHz 10 V, 10 kHz ... 80 MHz to IEC 61000-4-6
Immunity to magnetic fields	100 A/m, 50/60 Hz according to IEC 61000-4-8	100 A/m, 50/60 Hz according to IEC 61000-4-8

Technical specifications (continued)

SIMATIC PCS7 OS Clients based on Microbox		
Types	**SIMATIC PCS 7 OS Client 427D**	**SIMATIC PCS 7 OS Client 477D**
Climatic conditions		
Temperature	Tested according to IEC 60068-2-1, IEC 60068-2-2, IEC 60068-2-14	Tested according to IEC 60068-2-1, IEC 60068-2-2
• Horizontal mounting, in operation (427D only)		
- Operation with hard disk and max. 2 expansion modules (max. load 10 W)	+5 ... +40 °C[1)]	–
- Operation with SSD and max. 2 expansion modules (max. load 10 W)	0 … +40 °C	–
- Operation with SSD in RAL[2)] and max. 2 expansion modules (max. load 10 W)	0 ... +50 °C[1)]	–
• Vertical mounting/portrait mounting, in operation (427D only)		
- Operation with hard disk (without expansion module)	+5 ... +35 °C[1)]	–
- Operation with SSD (without expansion module)	0 … +40 °C	–
- Operation with SSD in RAL[2)] and max. 2 expansion modules (max. load 10 W)	0 … +45 °C[1)]	–
• Mounting in landscape format, vertical (477D only)		
- Operation with hard disk	–	+5 ... +40 °C
- Operation with SSD	–	0 … +45 °C
• Mounting in landscape format, vertical incline max. ±45 ° (477D only)		
- Operation with hard disk	–	+5 ... +35 °C
- Operation with SSD	–	0 … +40 °C
• Storage/transport		
- HDD	-40 … +60 °C	-20 … +60 °C
- SSD	-40 … +70 °C	-20 … +60 °C
• Gradient		
- Operation	Max. 10 °C/h	–
- Storage	20 °C/h; no condensation	20 °C/h; no condensation
Relative humidity	Tested according to IEC 60068-2-78, IEC 60068-2-30	Tested according to IEC 60068-2-78, IEC 60068-2-30
• Operation	5 ... 80 % at 25 °C (no condensation)	5 ... 85 % at 30 °C (no condensation)
• Storage/transport	5 ... 95 % at 25 °C (no condensation)	5 ... 95 % at 25 °C (no condensation)
Air pressure	Tested according to IEC 60068-2-13	Tested according to IEC 60068-2-13
• Operation	1080 ... 795 hPa, corresponds to an altitude of -1000 … 2000 m	1080 ... 795 hPa, corresponds to an altitude of -1000 … 2000 m
• Storage/transport	1080 ... 660 hPa, corresponds to an altitude of -1000 … 3500 m	1080 ... 660 hPa, corresponds to an altitude of -1000 … 3500 m
Mechanical environmental conditions		
Vibrations	Tested according to IEC 60068-2-6	Tested according to IEC 60068-2-6
• Operation		
- With SSD	5 … 9 Hz: 3.5 mm 9 … 500 Hz: 9.8 m/s²	5 … 8.4 Hz: 3.5 mm 8.4 … 500 Hz: 9.8 m/s²
- With hard disk and wall mounting (427D) or installation (477D)	10 … 58 Hz: 0.0375 mm 58 ... 200 Hz: 4.9 m/s²	10 … 58 Hz: 0.375 mm 58 ... 200 Hz: 4.9 m/s²
- With hard disk and DIN rail mounting or vertical mounting (427D)	Starting prohibited	–
• Storage/transport	5 … 9 Hz: 3.5 mm 9 … 500 Hz: 9.8 m/s²	5 … 8.4 Hz: 3.5 mm 8.4 … 500 Hz: 9.8 m/s²
Shock resistance	Tested according to IEC 60068-2-27	Tested according to IEC 60068-2-27, IEC 60068-2-29
• Operation	Without hard disk: 150 m/s², 11 ms With hard disk: 50 m/s², 30 ms	50 m/s², 30 ms
• Storage/transport	250 m/s², 6 ms	250 m/s², 6 ms

Technical specifications (continued)

SIMATIC PCS7 OS Clients based on Microbox		
Types	**SIMATIC PCS 7 OS Client 427D**	**SIMATIC PCS 7 OS Client 477D**
Standards, specifications, approvals		
CE according to 2004/108/EC, 2006/95/EC	Yes	Yes
Industrial area of application • Interference emission • Immunity to interference	 EN 61000-6-4: 2007 EN 61000-6-2: 2005	 EN 61000-6-4: 2007 EN 61000-6-2: 2005
Application in apartments, business, trade, small enterprises • Interference emission • Immunity to interference	 EN 61000-6-3: 2007 EN 61000-6-1: 2007	 – –
cUlus	Underwriters Laboratories (UL) according to standard UL 60950-1 and UL 508 as well as Canadian National Standard CAN/CSA-C22.2 No. 60950-1 (I.T.E) and CAN/CSA-C22.2 No. 142 (IND.CONT.EQ)	Underwriters Laboratories (UL) according to standard UL 508 and Canadian National Standard CAN/CSA-C22.2 No. 142 (IND.CONT.EQ)
USA: FCC Rules, Part 15, Class A	Yes	Yes
Canada: ICES-003, Class A; NMB-003, Class A	Yes	Yes
Australia/New Zealand: EN 61000-6-4:2007	Yes	Yes
Korea: Korean Certification (KC Mark)	Yes	Yes
Special features		
Quality assurance	According to ISO 9001	According to ISO 9001
Power supply (electrically isolated)		
Supply voltage	24 V DC (19.2 ... 28.8 V)	24 V DC (19.2 ... 28.8 V)
Short-term voltage interruption	Min. 15 ms (at 20.4 V) Max. 10 events per hour; recovery time of at least 1 s	Min. 20 ms Max. 10 events per hour; recovery time of at least 1 s
Max. power consumption (at 24 V DC)	64.8 W	74 W
Dimensions and weights		
External dimensions (W × H × D in mm)	262 × 133 × 50.5	560 × 380 × 84
Mounting cutout (W × H in mm)	–	540 × 360
Mounting depth (D in mm)	–	75.5
Weight	Approx. 2 kg	Approx. 7 kg

1) If the "Turbo Mode Level" setting in the BIOS Setup "Power" menu is not set to "Temperature optimized", the maximum ambient temperature must be reduced by 5 °C.

2) RAL = Restricted Access Location: Installation of device in operating environment with restricted access, e.g. a locked control cabinet

3) Operating hours after which the maximum brightness is reduced by half compared to the original value.

Overview

SIMATIC PCS 7 OS Client 427D

The SIMATIC PCS 7 OS Client 427D is available in two versions which differ in terms of the data storage medium used:

- SIMATIC PCS 7 OS Client 427D (HDD)
  with a hard disk 2.5" SATA-HDD, 320 GB
- SIMATIC PCS 7 OS Client 427D (SSD)
  with a solid state drive 2.5" SATA-SSD, 160 GB (eMLC)

Design

Both versions of the SIMATIC PCS 7 OS Client 427D are designed for maintenance-free 24/7 operation without the support of a fan.

The absence of rotating storage Media means that the SSD version is particularly resistant to vibration and shock. When operating in a restricted access location (RAL), e.g. in a lockable control cabinet, operating temperatures from 0 °C to +50 °C are permissible for this version in a horizontal mounting position.

The compact design of the SIMATIC PCS 7 OS Client 427D (HDD/SSD) and the flexible mounting options (DIN rail, wall or portrait mounting) in a horizontal or vertical orientation help to achieve a space-saving design.

Expansions/interfaces

The SIMATIC PCS 7 OS Client 427D (HDD/SSD) has:

- 4 USB 3.0 ports (max. 2 high-current ports can be used simultaneously)
- 1 COM1 port (RS 232)
- 1 DVI-I port (combined DVI/VGA)
- 1 display port (DVI with DPP-to-DVI adapter); can be used for multi-monitor operation with two monitors
- 2 Ethernet interfaces 10/100/1000 Mbps (RJ45)

The two integrated Ethernet interfaces have a teaming capability and are thus suitable for connection to a redundant terminal bus (for details on implementation, refer to the function manual "High Availability process control systems", Section "Redundant, high availability terminal bus").

The SIMATIC PCS 7 OS Client 427D (HDD/SSD) is supplied without input/output devices. In addition to mouse and keyboard, two other input/output devices can be externally connected via the provided USB ports, e.g. an optical drive (DVD-ROM/DVD±RW) or smart card reader.

A process monitor with analog (VGA) or digital (DVI) connection can be operated at the DVI-I port. The adapter cable required for the analog VGA connection can be ordered as an option.

You can use the display port as a second graphics interface to implement multi-monitor mode with two process monitors. The first monitor in this case is operated on the DVI-I interface, the second on the display port (directly or via a DPP-to-DVI adapter).

The following resolutions are possible in multi-monitor mode:

- 1024 × 768
- 1152 × 864
- 1280 × 1024
- 1600 × 1200
- 1680 × 1050
- 1920 × 1080
- 1920 × 1200

Monitoring functions

Configurable monitoring functions can be recorded and evaluated via SIMATIC IPC DiagMonitor and SIMATIC PCS 7 Maintenance Station. These monitoring functions include:

- Program execution (watchdog)
- Processor and board temperatures
- Enhanced diagnostics/messages, e.g. operating hours counter, hard disk status or system status, backup battery status

The "Power" and "Watchdog" signals are displayed on LEDs.

Pre-installed software

The following software is pre-installed on the SIMATIC PCS 7 OS Client 427D (HDD/SSD) on delivery:

- Operating system Windows 7 Ultimate SP1, 64-bit, multilanguage (English, German, French, Italian, Spanish, Chinese)
- SIMATIC PCS 7 OS Software Client V8.2
- SIMATIC IPC DiagMonitor diagnostics software

Technical specifications

For detailed technical specifications of the SIMATIC PCS 7 OS Client 427D, see "Comparison of SIMATIC PCS 7 OS Clients 427D and 477D" in the catalog section "SIMATIC Microbox PC", page 3/42.

Ordering data

	Article No.
SIMATIC PCS 7 OS Client 427D based on SIMATIC IPC427D SIMATIC IPC427D for use as SIMATIC PCS 7 OS Client/Batch Client Intel Core I7-3517UE, 2 × 1.7 GHz, 4 MB Second Level Cache; 4.0 GB DDR3 SDRAM 1066 (1 SO-DIMM module); 2 × Ethernet 10/100/1000 Mbps (RJ45) onboard; 4 × USB 3.0 (High Current); 24 V DC power supply SIMATIC IPC DiagMonitor diagnostics software and restore DVDs; SIMATIC PCS 7 OS Software Client V8.2 pre-installed Note: Product package without optical drive, mouse, keyboard or monitor Windows 7 Ultimate SP1 64-bit operating system, multi-language (English, German, French, Italian, Spanish, Chinese)	
• **SIMATIC PCS 7 OS Client 427D (HDD)** version with 320 GB hard disk, HDD SATA	**6ES7650-0UG28-0YX0**
• **SIMATIC PCS 7 OS Client 427D (SSD)** version with 160 GB solid state drive, SSD SATA (eMLC)	**6ES7650-0UG28-0YX1**

Additional and expansion components

8.0 GB DDR3-SDRAM (1 SO-DIMM module without ECC)	**6ES7648-2AH70-0KA0**
SIMATIC IPC, graphics adapter cable, DVI-I to VGA Length 250 mm	**6ES7648-3AB00-0XA0**
SIMATIC IPC, graphics adapter DPP to DVI Converts DisplayPort to DVI-D	**A5E30126998**
Keyboard/mouse	
SIMATIC IPC keyboard German/international with USB connection	**6ES7648-0CB00-0YA0**
SIMATIC HMI USB mouse Optical mouse with scroll wheel and USB connection, color anthracite	**6AV2181-8AT00-0AX0**

Accessories

Portrait mounting	
Portrait mounting kit For space-saving installation of the SIMATIC PCS 7 OS Client 427D (front)	**6ES7648-1AA20-0YP0**

Accessories

Portrait assembly kit

The portrait assembly kit allows space-saving installation of the SIMATIC Microbox PC in the control cabinet. The technical specifications of the SIMATIC Microbox PC correspond in this design form to those with a vertical DIN rail assembly.

As a result of the portrait assembly, the mounting area required (W × H in mm) is reduced from 262 × 133 to 61.5 × 315. Together with the kit, the SIMATIC Microbox PC occupies a mounting depth of 149.7 mm in the control cabinet. Since all interfaces of the SIMATIC Microbox PC are accessible from the front, this type of assembly is very convenient for commissioning.

When using the portrait assembly kit for the SIMATIC Microbox PC, please also observe the information on operation planning and device installation in the "SIMATIC IPC427D industrial PC" manual.

Overview

SIMATIC PCS 7 OS Client 477D

The SIMATIC PCS 7 OS Client 477D consists of a 22" TFT Touch Panel with integrated computing unit. It is available in two versions which differ in terms of the data storage medium used:

- SIMATIC PCS 7 OS Client 477D (HDD)
  with a hard disk 2.5" SATA-HDD, 320 GB
- SIMATIC PCS 7 OS Client 477D (SSD)
  with a solid state drive 2.5" SATA-SSD, 160 GB (eMLC)

Design

The design of the SIMATIC PCS 7 OS Client 477D has been optimized for installation in mounting cutouts of cabinets, enclosures or consoles.

Both versions of the SIMATIC PCS 7 OS Client 477D are suitable for maintenance-free 24/7 operation without the support of a fan.

The more rugged SIMATIC PCS 7 OS Client 477D with SSD can bear greater mechanical loads. With vertical installation in landscape format, the SIMATIC PCS 7 OS Client 477D is approved for operating temperatures of 0 to +45 °C.

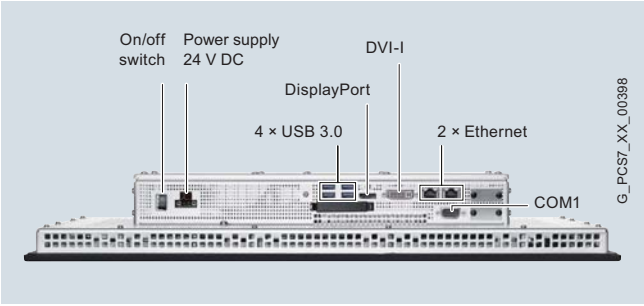

IPC477D 22 inch for PCS 7, with connections

Expansions/interfaces

The SIMATIC PCS 7 OS Client 477D (HDD/SSD) features:

- 4 USB 3.0 ports, rear (max. 2 high-current ports can be used simultaneously)
- 1 USB 2.0 port, front, on TFT Panel (high current)
- 1 COM1 port (RS 232)
- 1 DVI-I port (combined DVI/VGA)
- 1 DisplayPort (DVI with DPP-to-DVI adapter)
- 2 Ethernet interfaces 10/100/1000 Mbps (RJ45)

The two integrated Ethernet interfaces have a teaming capability and are thus suitable for connection to a redundant terminal bus (for details on implementation, refer to the function manual "High Availability process control systems", Section "Redundant, high availability terminal bus").

The SIMATIC PCS 7 OS Client 477D (HDD/SSD) is supplied without input/output devices. In addition to mouse and keyboard, two other input/output devices can be externally connected via the provided USB ports, e.g. an optical drive (DVD-ROM/DVD±RW) or smart card reader.

Monitoring functions

Configurable monitoring functions can be recorded and evaluated via SIMATIC IPC DiagMonitor and SIMATIC PCS 7 Maintenance Station. These monitoring functions include:

- Program execution (watchdog)
- Processor and board temperatures
- Enhanced diagnostics/messages, e.g. operating hours counter, hard disk status or system status, backup battery status

Pre-installed software

The following software is pre-installed on the SIMATIC PCS 7 OS Client 477D (HDD/SSD) on delivery:

- Operating system Windows 7 Ultimate SP1, 64-bit, multilanguage (English, German, French, Italian, Spanish, Chinese)
- SIMATIC PCS 7 OS Software Client V8.2
- SIMATIC IPC DiagMonitor diagnostics software

Technical specifications

For detailed technical specifications of the SIMATIC PCS 7 OS Client 477D, see "Comparison of SIMATIC PCS 7 OS Clients 427D and 477D" in the catalog section "SIMATIC Microbox PC", page 3/42.

Ordering data

	Article No.
SIMATIC PCS 7 OS Client 477D based on SIMATIC IPC477D SIMATIC IPC477D for use as SIMATIC PCS 7 OS Client/Batch Client Intel Core I7-3517UE, 2 × 1.7 GHz, 4 MB Second Level Cache; 4.0 GB DDR3 SDRAM 1066 (1 SO-DIMM module); 2 × Ethernet 10/100/1000 Mbps (RJ45) onboard; 4 × USB 3.0 (High Current), 1 × USB 2.0 (High Current); 24 V DC power supply SIMATIC IPC DiagMonitor diagnostics software and restore DVDs; SIMATIC PCS 7 OS Software Client V8.2 pre-installed Note: Product package without optical drive, mouse or keyboard Windows 7 Ultimate SP1 64-bit operating system, multi-language (English, German, French, Italian, Spanish, Chinese)	
• **SIMATIC PCS 7 OS Client 477D (HDD)** version with 320 GB hard disk, HDD SATA	**6ES7650-0UG28-1YX0**
• **SIMATIC PCS 7OS Client 477D (SSD)** version with 160 GB solid state drive, SSD SATA (eMLC)	**6ES7650-0UG28-1YX1**

Additional and expansion components

8.0 GB DDR3-SDRAM (1 SO-DIMM module without ECC)	**6ES7648-2AH70-0KA0**
SIMATIC IPC keyboard German/international with USB connection	**6ES7648-0CB00-0YA0**
SIMATIC HMI USB mouse Optical mouse with scroll wheel and USB connection, color anthracite	**6AV2181-8AT00-0AX0**

Design

Mouse

SIMATIC PCS 7 Industrial Workstations, SIMATIC PCS 7 compact systems as well as OS clients based on SIMATIC BOX/ Microbox PC are delivered without a mouse. The SIMATIC HMI USB mouse is recommended as the input device for the operator-controlled stations of a SIMATIC PCS 7 system.

Keyboard

SIMATIC PCS 7 industrial workstations, SIMATIC PCS 7 compact systems as well as OS Clients based on SIMATIC BOX and Microbox PC are delivered without a keyboard.

A keyboard without additional special functions which is suitable for process operation with SIMATIC PCS 7 is e.g. the SIMATIC PC keyboard with USB connection and German/international key assignment.

The SIMATIC PC keyboard is a stable, standard MF2 keyboard with 105 keys, and can also be used on a PS/2 interface together with the supplied USB-PS/2 adapter. It combines the convenience of an office keyboard with the rugged design of an industrial device.

In addition, a process control keyboard for SIMATIC PCS 7 is offered in the ST PCS 7 AO (Add-ons for SIMATIC PCS 7) catalog, "Operator control and monitoring" section. It comes equipped with a USB connection, 104 standard keys and 90 programmable function keys.

Technical specifications

Mouse	
SIMATIC HMI USB mouse	
Color	Anthracite
Interfaces	USB
Dimensions (L x W x H) in mm	116 × 67.9 × 42.3
Weight, approx.	131 g
Connecting cable, cable length	1930 mm
Ambient temperature • Operation • Storage/transport	 0 …40 °C -40 … +60 °C
Supply voltage, rated value	5 V DC; via USB
Current consumption	100 mA; USB-compatible
Standards, approvals, certificates	• CE mark; WEEE (European Union) available • KC • cUlus; ICES-003 (Canada) available
Keyboard	
SIMATIC PC keyboard	
Designation	SIMATIC PC keyboard, USB
Layout	MF2, 105 keys, German/international
Interfaces	USB; PS/2 via USB-PS/2 adapter
Dimensions (L x W x H) in mm	470 × 195 × 44
Weight, approx.	1.4 kg
Connecting cable	1.75 m long, USB plug
Temperature • Operation • Storage/transport	 0 ... +50 °C -20 ... +60 °C
Approvals	FCC, cURus, GS, CE, c-tick, GOST-R

Ordering data

	Article No.
SIMATIC HMI USB mouse Optical mouse with scroll wheel and USB connection, color anthracite	**6AV2181-8AT00-0AX0**
SIMATIC PC keyboard German/international key assignment, with USB connection and USB-PS/2 adapter	**6ES7648-0CB00-0YA0**

Overview

Using multi-monitor mode, the visualization of a project/subproject when engineering or a plant/unit in process operation can be divided among up to 4 process monitors per operator station with application of different views. These project/plant sections can all be operated using just one keyboard and one mouse. Compared to single-channel mode, it is possible to enormously improve the efficiency, convenience and ergonomics of engineering and process control.

The SIMATIC PCS 7 Industrial Workstations are already equipped with an onboard graphics interface which supports multi-monitor mode with 2 process monitors.

One process monitor can be connected to the DVI-I port of the onboard graphics interface. The second one can be connected via an adapter cable (DisplayPort to DVI-D) to its DisplayPort.

A separate multi-monitor graphics card "4 Screens" is available for controlling 3 or 4 process monitors.

Both versions of the multi-monitor mode can be delivered factory-set with the SIMATIC PCS 7 Industrial Workstation (configuration option) or retrofitted. The desired configuration option can be selected using the online configurator of the SIMATIC PCS 7 Industrial Workstation or the ordering data tables of the single station, server or client versions.

The multi-monitor graphics card "2 Screens" can be used as an alternative to the onboard graphics interface or for retrofitting. This graphics card must be ordered separately.

Technical specifications

Multi-monitor graphics cards	Graphics card "2 Screens"	Graphics card "4 Screens"
Memory	512 MB DDR2	512 MB DDR2
Resolution • Max. analog resolution per channel • Max. digital resolution per channel	 2048 x 1536 1920 x 1200	 1920 x 1200 1920 x 1200
Electromagnetic compatibility (EMC)	Class B	Class B
Slot requirement	1 x PCIe (Express) x16	1 x PCIe (Express) x16
Low-profile format	The format of the cards is "low profile" Scope of delivery: 2 retaining clamps for installation in systems with the "low-profile format" as well as in systems with the ATX format of full height	
Passive cooling and low current consumption	Design without fan for silent operation and to improve product reliability	

Multi-monitor mode

Ordering data

	Article No.
Multi-monitor mode with two process monitors via onboard graphics interface	
Adapter cable DisplayPort to DVI-D for onboard graphics	**6ES7648-3AF00-0XA0**
Multi-monitor mode with two process monitors via multi-monitor graphics card	
Multi-monitor graphics card "2 Screens" For operation of 2 process monitors on 1 station Delivery package: Dual graphics card, driver CD, 1 dual DVI cable for 2 digital outputs, 2 adapters for VGA outputs	**6ES7652-0XX04-1XE0**

	Article No.
Multi-monitor mode with three or four process monitors	
Multi-monitor graphics card "4 Screens" For operation of 4 process monitors on 1 station Delivery package: Quad graphics card, driver CD, 1 quad DVI cable for 4 digital outputs, 4 adapters for VGA outputs	**6ES7652-0XX04-1XE1**

Overview

A smart card reader can be used to check operator privileges on a single station or client. The smart card reader then works together with SIMATIC Logon, the user administration and access control function integrated in SIMATIC PCS 7 (see section "IT Security", under "SIMATIC Logon", page 15/6).

The smart card has the function of a "key" for the operator station. Inputs are only permissible as long as it is inserted in the reader. Such unambiguous identification is particularly necessary for plants having to comply with validation requirements.

Technical specifications

Type	USB chipcard reader
Interface	
Interface type	USB 2.0 CCID (Chip Card Interface Device), USB 1.1 compatible
Transmission rate	12 Mbit/s
Power supply	Via USB
Design and equipment	
Design	Desktop unit with foot for vertical positioning; adhesive pad at rear for optional mounting
Material	ABS
Color	Two shades of gray
Status display	Two-color LED
Cable length	1.8 m
Dimensions and weights	
Dimensions (L × W × D in mm)	80 × 67 × 28
Weight without foot	110 g
Weight with foot	141 g
Ambient conditions during operation	
Temperature	0 … 55 °C
Humidity	10 … 90 %
Service life/MTBF	
Insertion cycles	100 000
MTBF (Mean Time Between Failures)	500 000 h
Test symbols/approvals	• Microsoft WHQL (Windows Hardware Quality Lab) • ISO 7816 • USB 2.0 (USB 1.1 compatible) • CCID (Chip Card Interface Device) • GSA Fips201 approved product list
Safety/environmental standards	• CE • WEEE • FCC • UL • VCCI • MIC • RoHS

Ordering data

USB smart card reader Desktop unit with USB cable	**6ES7652-0XX02-1XC0**
SIMATIC PCS 7 TCOS 3.0 chip card for chip card reader Pack with 10 units; 1 card is required per user	**6ES7652-0XX00-1XD2**

Overview

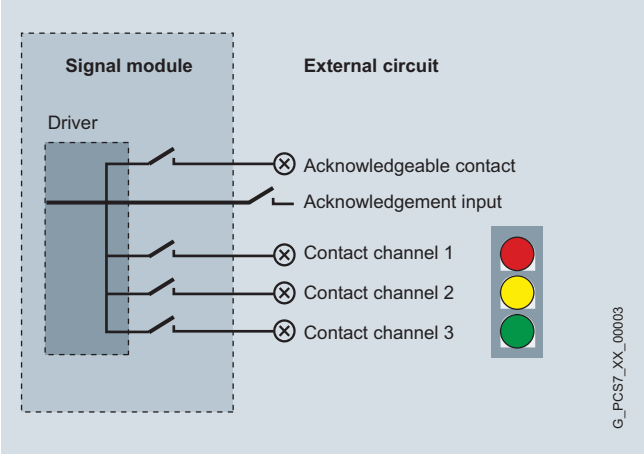

OS single station and OS client can be expanded by a signal module. These signal modules can control a horn and up to 3 different lamps or buzzer tones that represent a variety of message classes. Using a hardware timer (watchdog), the signal modules can detect and signal the failure of an operator station. A hardware acknowledgment button can also be connected.

The signal modules are installed in a PCI slot in the operator station.

They can be operated under the following operating systems:

- Windows 7 Ultimate 32/64-bit
- Windows Server 2008 R2 Standard 64-bit

Ordering data

	Article No.
PCI Signal module PCI card for installation in an operator station	**6DS1916-8RR**
Connecting cable For connection of an external horn to a signal module	
• 3 m	**6XV2175-8AH30**
• 10 m	**6XV2175-8AN10**
• 32 m	**6XV2175-8AN32**
• 50 m	**6XV2175-8AN50**

Engineering System

4

Overview

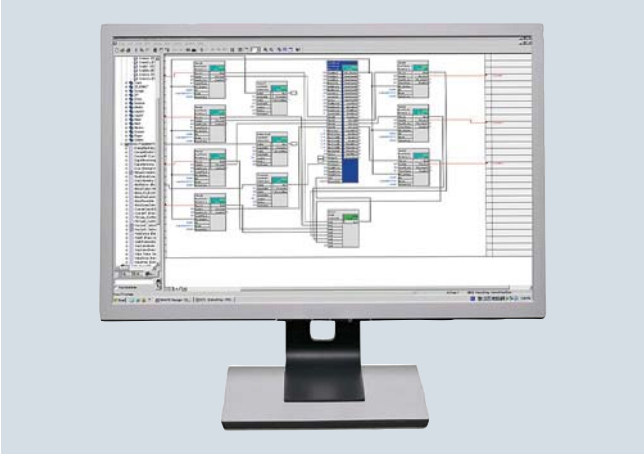

The engineering system of the SIMATIC PCS 7 process control system is based on the high-performance SIMATIC PCS7 Industrial Workstation, which can be used either in office applications or in industrial environments.

The engineering software run on this hardware can be optimally matched to different customer requirements and tasks. The basic functionality defined by the standard engineering software can be optionally expanded depending on the project-specific task and its implementation.

The software licenses provided for the engineering system can be used to configure two system variants for different applications areas:

- **Classic, dedicated engineering station**
  allows in addition to engineering a 2-hour OS test mode, but no productive operation as an operator station
- **Combined engineering/operator station for small applications**
  allows in addition to engineering also process control for small plants in productive operation

Design

The architecture of the engineering system depends on how the SIMATIC PCS 7 project is processed:

- Locally, on a central engineering station
- In the engineering network (concurrent engineering)

Central engineering station

Hardware platform for the central engineering station is the SIMATIC PCS 7 Industrial Workstation in the single station version. This is based on a SIMATIC IPC of Rack PC design which is prepared for installation in 19" rack systems. It is available in two versions which have different communication links to the Industrial Ethernet plant bus:

- SIMATIC PCS 7 ES/OS IPC[1] BCE
  Connection to plant bus with 10/100/1000 Mbps RJ45 network adapter and Basic Communication Ethernet (BCE) for communication with up to 8 automation systems (no redundancy stations)
- SIMATIC PCS 7 ES/OS IPC[1] IE
  Connection to plant bus with CP 1613 A2/1623/1628 communication module for communication with up to 64 automation systems

Two onboard 10/100/1000 Mbps Ethernet RJ45 ports are available for connecting to the terminal bus.

The Windows 7 Ultimate 64-bit operating system and the SIMATIC PCS 7 engineering software for AS/OS are factory installed on the SIMATIC PCS 7 Industrial Workstation. The scope of performance of the pre-installed SIMATIC PCS 7 engineering software is defined by installation of the purchased software licenses.

Engineering network

With concurrent engineering in an engineering network, the project is localized on one of the participating Engineering Stations, the "Project server". The engineering stations working as "Project clients" can access the project server data via LAN/WAN. Every engineering station in the network (project server/client) is able to download configuration data to a SIMATIC PCS 7 subsystem provided it has the required communication connections.

With this architecture, it is appropriate to install the project server on a SIMATIC PCS 7 Industrial Workstation, server version. The Windows Server 2008 R2 Standard 64-bit operating system and the SIMATIC PCS 7 OS Software server are factory installed on this (adaptation/expansion of SIMATIC PCS 7 installation required).

Like the single station version of the SIMATIC PCS 7 Industrial Workstation, the server version is also available in two versions which differ with regard to the plant bus communication:

- SIMATIC PCS 7 OS Server IPC[1] BCE
  Connection to plant bus with 10/100/1000 Mbps RJ45 network adapter and Basic Communication Ethernet (BCE) for communication with up to 8 automation systems (no redundancy stations)
- SIMATIC PCS 7 OS Server IPC[1] IE
  Connection to plant bus with CP 1613 A2/1623/1628 communication module for communication with up to 64 automation systems

With the SIMATIC PCS 7 Industrial Workstation, single station version, you can use the same hardware platform for the project clients as for the central engineering station.

Configuration can be made easier by multi-monitor mode with up to 4 process monitors, both for a central engineering station and for individual stations in an engineering network.

See section "Industrial Workstation/IPC" for ordering data and detailed information on the product package and technology of the SIMATIC PCS 7 Industrial Workstations.

[1] IPC stands for one of the SIMATIC IPC types from the product range in the section "Industrial Workstation/IPC, SIMATIC Rack PC" that are authorized for SIMATIC PCS 7 V8.2.

Overview

The functionality of the engineering system is largely covered by the standard engineering software. The following software options are available in addition for special functions:

- SIMATIC PCS 7 Logic Matrix
- SIMATIC Version Cross Manager
- SIMATIC Version Trail
- SIMATIC PCS 7 Advanced Engineering System (AdvES)
- SIMATIC PCS 7 Import/Export Assistant
- SIMATIC PDM Process Device Manager for SIMATIC PCS 7
- Engineering Process Safety (see chapter 14 "Safety Integrated for Process Automation")
- SIMATIC PCS 7 Maintenance Station Engineering (see chapter 7 "Plant Device Management")
- SIMATIC Route Control Engineering (see chapter 13 "Route Control")
- SIMATIC PCS 7 TeleControl OS Engineering (see in Catalog ST PCS 7 T)
- SIMATIC PCS 7 PowerControl OS Engineering (see in Catalog ST PCS 7 T)
- S7-PLCSIM for the functional testing of CFC/SFC programs

Design

SIMATIC PCS 7 Engineering System with operating system Windows 7 Ultimate 64-bit or Windows Server 2008 R2 Standard 64-bit									
Versions		Classic, exclusively engineering station						Combined engineering/operator station for small applications	
Productive operation as an operator station possible		–						●	
Version		Project server		Project client		Single station		Single station	
		BCE	IE	BCE	IE	BCE	IE	BCE	IE
SIMATIC PCS 7 Industrial Workstation including operating system									
BCE communication for up to 8 automation systems (no redundant systems)	SIMATIC PCS 7 ES/OS IPC[1] BCE	–	–	●	–	●	–	●	–
	SIMATIC PCS 7 OS Server IPC[1] BCE	●	–	–	–	–	–	–	–
IE communication	SIMATIC PCS 7 ES/OS IPC[1] IE	–	–	–	●	–	●	–	●
	SIMATIC PCS 7 OS Server IPC[1] IE	–	●	–	–	–	–	–	–
Additional Industrial Ethernet communications software									
SIMATIC NET HARDNET-IE S7 REDCONNECT PowerPack for IE communication with redundant automation systems (additive to SIMATIC NET HARDNET-IE S7)		–	●	–	●	–	●	–	●
Standard engineering software, alternatives									
SIMATIC PCS 7 Engineering Software, unlimited POs	AS and OS, including 2-hour OS test mode	●		●		●		–	
	AS	●		●		●		–	
SIMATIC PCS 7 ES single station, with 250 AS/OS Runtime POs		–		–		–		●	
Supplementary engineering software (optional)									
SIMATIC PCS 7 Logic Matrix		●		●		●		●	
Version Cross Manager		●		●		●		●	
Version Trail		●		●		●		●	
Advanced Engineering System (AdvES)		●		●		●		●	
Import/Export Assistant		●		●		●		●	
Engineering Process Safety (S7 F Systems, Safety Matrix Tool)		●		●		●		●	
PCS 7 Maintenance Station Engineering		●		●		●		●	
SIMATIC Route Control Engineering		●		●		●		●	
SIMATIC PDM		●		●		●		●	
SIMATIC PCS 7 TeleControl OS Engineering[2]		●		●		●		●	
SIMATIC PCS 7 PowerControl OS Engineering[2]		●		●		●		●	
Simulation with S7-PLCSIM		●		●		●		●	

Hardware and software components of the engineering system, as well as possible configurations

[1] IPC stands for one of the SIMATIC IPC types from the product range in the section "Industrial Workstation/IPC, SIMATIC Rack PC" that are authorized for SIMATIC PCS 7 V8.2.

[2] Products can be found in Catalog ST PCS 7 T, SIMATIC PCS 7 technology components

Note on Microsoft SQL Server software

The "SQL Server" software from Microsoft which is delivered together with SIMATIC PCS 7 is exclusively intended for this process control system. It must not be used in any other context without previous written approval by Siemens.

Overview

The standard engineering software provides the basic functionality for configuration of SIMATIC PCS 7 plants with:

- Automation systems
- Process I/O
- Communication networks
- Operator systems
- Maintenance station
- SIMATIC BATCH
- SIMATIC Route Control

Licensing of the standard engineering software depends on use of the engineering station as:

- Classic, dedicated engineering station (not suitable for productive operation as an operator station)
- Combined engineering/operator station for small applications (suitable for productive operation as an operator station)

Application

Classic, exclusive engineering station with unlimited number of process objects for engineering (Engineering unlimited POs)

Two software versions with unlimited engineering POs are available for the classical engineering station:

- AS/OS – for engineering of automation systems (AS) and operator systems (OS)
- AS – only for AS engineering

With the AS/OS software version, the OS configuration can be tested in an OS test mode limited to 2 hours. This OS test mode is not suitable for productive operation. After 2 hours, the engineering station automatically switches to demonstration mode.

Rental License

A 30-day or 50-hour rental license for AS engineering (unlimited POs) gives you a cost-effective alternative for short-term projects or short-term capacity bottlenecks.

The licenses for 30 days and 50 hours differ as follows with regard to runtime billing:

- With the 30-day license, the uninterruptible timer starts at the time of first usage. Time billing is thus independent of usage.
- With the 50-hour license, only the actual period of use is billed. The timer stops when the SIMATIC PCS 7 application is exited, and restarts when the application is opened again.

Combined engineering/operator station for small applications

The combined engineering/operator station is designed to support compact process control plants. This combines an unlimited AS/OS Engineering license (unlimited POs) with an AS/OS Runtime license for 250 POs. These licenses can only be used together on a station. It is not possible to separate the Engineering and Runtime licenses for use on different stations.

The runtime POs can be expanded with cumulative Runtime licenses:

- SIMATIC PCS 7 AS Runtime license for 100, 1 000 or 10 000 POs, see section "Automation systems", "Modular AS 410 systems"
- SIMATIC PCS 7 OS Runtime license for 100, 1 000 or 5 000 POs, see section "Operator system", "OS software" under "OS standard software for single station / server / client"

Division of work during engineering

To enable engineering to be carried out in the shortest possible time, it is necessary to use resources optimally. The engineering system of the SIMATIC PCS 7 process control system not only supports uniform engineering of the project on an engineering station but also provides various options for dividing the work.

Concurrent Engineering

With Concurrent Engineering multiple project engineers can work concurrently on one project in CFC and SFC, without having to split the project up into sub-projects beforehand. During commissioning, for example, charts can be used in the online (debug) mode and at the same time changes can be made to the project. The Graphics Designer supports parallel working on a project even when creating process displays.

The project is localized on one of the participating engineering stations, the "Project server". The engineering stations working as "Project clients" can access the project data via LAN/WAN. A specific chart can be found very quickly using a cross-project search function.

CFC and SFC charts can be opened and viewed by several project engineers concurrently. However, the system rejects concurrent write accesses to the database. If the project engineer attempts to access a chart which is already being used, a corresponding warning is output in a dialog window.

Every engineering station in the network (project server/client) is able to download configuration data to a SIMATIC PCS 7 subsystem provided it has the required communication connections.

Multiproject Engineering

Multi-project engineering permits division of a complex project into several subprojects in accordance with technological criteria in order to allow several teams to work on the project in parallel. To achieve this, a host "Multi-project" is defined in the SIMATIC Manager. The individual projects can be added or removed from a multiproject at any time. Similarly, projects can be divided or combined (Branch & Merge).

The subprojects in a multiproject are stored on a central server and moved to the local engineering stations for editing. The engineering performance is then not affected by network access.

Central configuration functions for multi-projects help to reduce the configuration overhead. For example, a hierarchy folder can be created in the current project and also automatically in all other projects. It cannot be modified there, but objects can be inserted. All block types used in a multi-project can also be updated centrally.

Function

Essential tools of the standard engineering software and their functions:

SIMATIC Logon

SIMATIC Logon is a user administration and access control function integrated in the engineering system. Together with the detailed recording facilities provided by the change log, SIMATIC Logon offers plant owners exceptional system support when verifying changes.

Using SIMATIC Logon, the administrator can assign specific access privileges to groups of users, thus controlling the possibilities for data access. Access rights for stations of the process control system and operator privileges for blocks can both be set up. Configurable change logs permit the recording of all access operations to the engineering system as well as all online changes concerning the automation systems, operator systems, SIMATIC BATCH or SIMATIC Route Control.

If the modification reports are linked to the data of SIMATIC Logon during evaluation, it can be clearly proven who has carried out a specific modification and at what time. Such verifications are often the object of special sector-specific requirements, formulated, for example, in FDA 21 CFR Part 11 or GAMP.

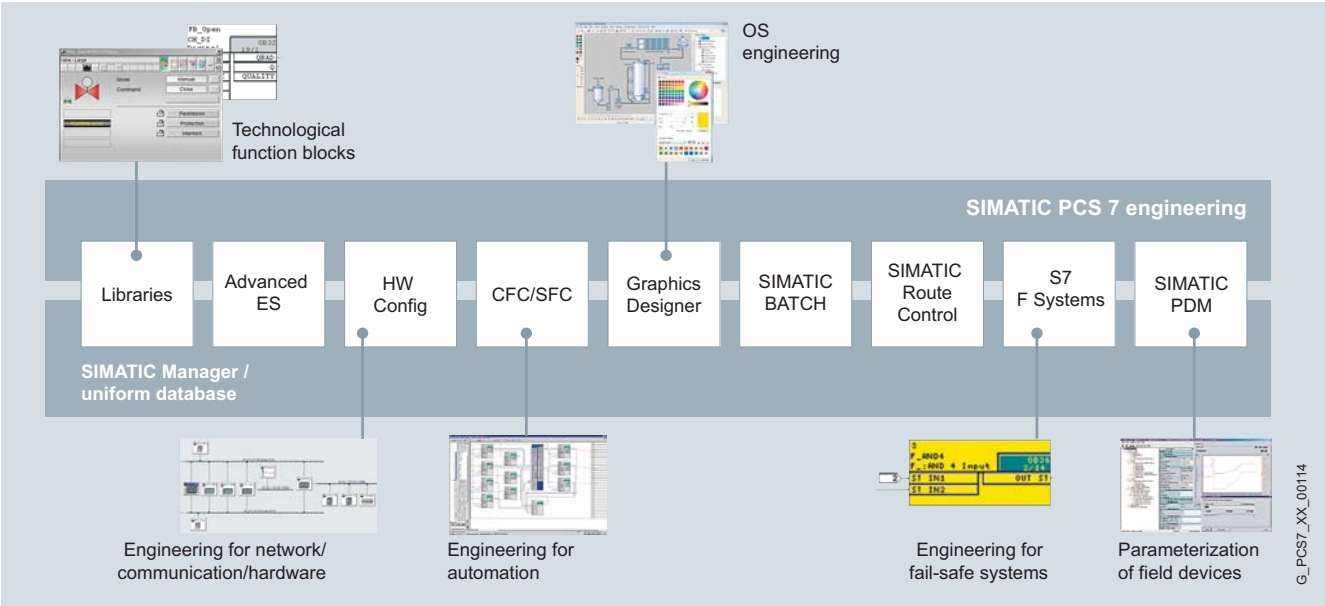

SIMATIC Manager

The SIMATIC Manager is the control center of the engineering system. It is the integration platform for the engineering toolset as well as the configuration basis for all engineering tasks of the SIMATIC PCS 7 process control system. All aspects of the SIMATIC PCS 7 project are created, managed, archived and documented here.

The engineering toolset contains tools which are optimally matched to one another for system-wide project-oriented engineering, and which simultaneously provide the basis for asset management of the I&C equipment. These include tools for effective engineering of the following components:

- Control system hardware including distributed I/O and field devices
- Communication networks
- Automation functionality for continuous and batch processes (AS engineering)
- Operation and monitoring functionality (OS engineering)
- Mass data engineering and cooperation with CAD/CAE planning tools (Advanced Engineering System)
- Diagnostics and asset management functionality
- Batch processes, automated with SIMATIC BATCH
- Material transport, controlled by SIMATIC Route Control
- Safety applications (Safety Integrated for Process Automation)

Technologists as well as process and production engineers can carry out planning and configuration in their familiar environments when using this range of tools as well as predefined blocks and charts.

The hardware required for use in a SIMATIC project, such as automation systems, communications components and process I/O, is stored in an electronic catalog. The hardware can be configured and configured using the HW-Config tool.

Creating hierarchy folders implements a project structure, the plant hierarchy (PH). By storing CFC and SFC charts for automation systems and pictures and reports for operator stations in a hierarchy folder along with additional documentation, the configuring engineer implicitly determines the hierarchical assignment.

Function blocks (FBs) and functions (FCs) can be encrypted and decrypted with the S7-Block Privacy application to protect know-how. Following encryption, the blocks and their attributes can no longer be modified. Only the interfaces of the blocks are then visible.

4

Function (continued)

To implement the automation logic, standardized function blocks must be combined with other blocks in the graphic configuration tool CFC according to technological specifications. You can simply select predefined blocks or charts for this purpose from a catalog and then position, graphically interconnect and configure them in the working area. The process tag data relevant to operation and monitoring, such as messages and variables, are generated at the same time. The SIMATIC PCS 7 Logic Matrix can be used for fast and easy creation of the interlock logic between various Control Modules/Equipment Modules.

Sequential controls permit control and selective processing of the basic automation functions created per CFC by means of changes in operating mode and status. Convenient editing functions for the graphic configuration of sequential controls as well as powerful test and commissioning functions are offered by the SFC editor.

With the optional Advanced Engineering System, configuring and commissioning can be effectively rationalized, e.g. by means of automatic generation of the hardware configuration or multiple use of standardized software modules. The Advanced Engineering System can also exchange data with higher-level planning systems for this purpose (for additional information, refer to "Advanced Engineering" section).

Complete SIMATIC PCS 7 projects or all project modifications can be compiled in one working step and downloaded to the target systems involved, e.g. to automation systems, Operator Systems or SIMATIC BATCH. The engineering system automatically ensures that the sequence is correct. The procedure is displayed and controlled in a central dialog.

A more effective method for less comprehensive changes to the standard automation, e.g. addition or modification of single process tags, is selective compilation and downloading at chart level. This can be started from the technological hierarchy, from the CFC, or from the chart folder.

The project engineer can recognize all changes since the last download by their color, and the current chart states by means of the corresponding symbols. The project engineer can make a specific choice in a dialog form for selective downloading. In association with the Version Trail, each download is automatically followed by archiving.

In the case of blocks being executed on the AS 410 automation system, it is even possible to change types during runtime by means of seamless copying (TCiR).

The SIMATIC Manager can also be used to organize the project data for engineering of the operator systems. All the relevant process tag data relevant to operation and monitoring is generated when the automation function is defined. A powerful Graphics Designer is available for generation of the process displays. The basis for generating process displays is provided by static symbols and dynamic block icons and faceplates that are organized in libraries and linked to the parameters of the function blocks.

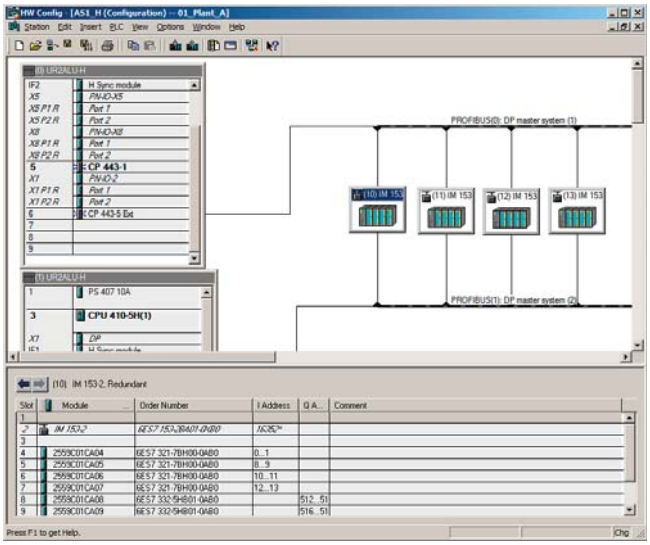

Component view: hardware configuration in the SIMATIC Manager with HW-Config

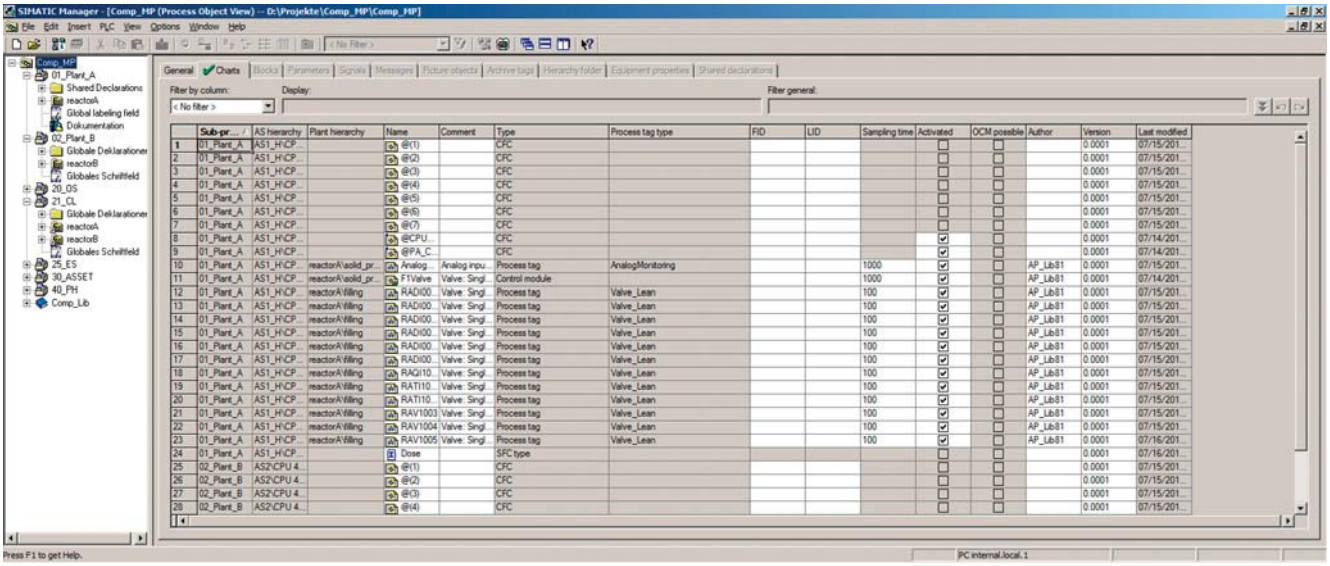

Process tags in the process object view

Function (continued)

Project views

The various tasks for creating a plant project are supported by the following project views:

- **Component view (HW-Config)**
  for configuration of hardware such as automation systems, bus components or process I/O
- **Process object view**
  as the central development environment for all aspects of process tags/objects

The process object view supports the work carried out by a process engineer by providing a universal view of the process tag. It shows the plant hierarchy represented in tree form in combination with a tabular view of all aspects of the process tag/object (general, charts, blocks, parameters, signals, messages, picture objects, archive variables, hierarchy folders, equipment properties and global declarations). This provides the technologist with fast orientation.

All objects in the marked branch of the hierarchy are displayed in the table so that they can be directly processed with user-friendly edit, filter, replace, import and export functions. A special test mode offers the facility for testing process tags and CFCs online and for starting them up.

The OS areas and the image hierarchy for process control, as well as the SIMATIC PCS 7 asset management, can be derived from the technological hierarchy. Furthermore, it also forms the basis for the plant-oriented identification of process objects.

Common displays can be positioned in pictures by means of the image hierarchy, and automatically linked to lower-level images. The configuration engineer is only responsible for the correct positioning. Since the number of common display fields and their semantics can be configured, it is also possible to implement customized alarm configurations.

I&C and process messages are already pre-configured in the function blocks, and operator input messages are already pre-configured in the faceplates. These are automatically generated when the triggering event occurs. If required, message texts can be modified or message priorities defined.

Using the process object view, "Smart Alarm Hiding" can also be configured. This refers to the dynamic hiding of alarms that are of secondary importance to the safe and interference-free operation of the plant under certain plant conditions. Depending on the operating status of a plant unit (startup, service etc.), messages of the technological blocks grouped in this plant unit are shown or hidden in accordance with the previously set configuration. Alarms can be displayed or hidden separately for each of the maximum 32 operating states through selection of option boxes in the alarm matrix of the process object view. Although hidden alarms are not signaled visually and audibly, they are still logged and archived as before.

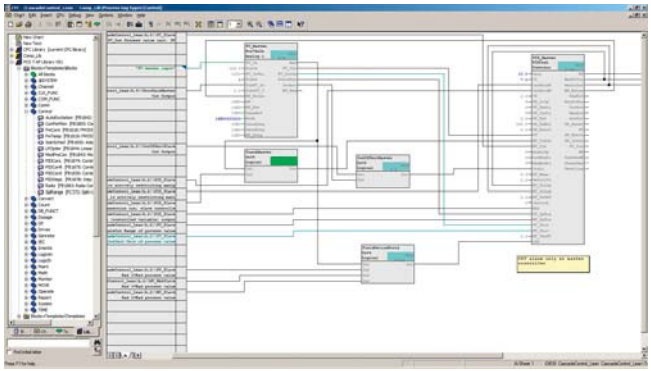

Continuous function chart

Continuous function chart (CFC)

The CFC editor permits graphic configuration of the continuous automation functions. In addition to convenient editing functions, its scope of functions also includes powerful test and commissioning functions as well as individually configurable documentation functions.

When creating a new CFC, a new runtime group with the same name as the chart is created. All the blocks that are subsequently entered in the chart are automatically added to this runtime group. Each block is therefore already assigned runtime properties when it is inserted, and configuration engineers can optimize these properties by means of modifications in the runtime editor or by using algorithms.

The algorithm first determines the optimum block sequence separately for each runtime group, and then the optimum sequence of runtime groups.

Instances of function block types can be positioned on CFCs, assigned parameters, and interconnected. Operator privilege levels can already be defined at block level for each block attribute so that finely granular operator privileges can be implemented.

Additional potential for rationalization is offered by special configuration techniques such as chart-in-chart for implementing hierarchical charts, or the multiple use of chart block types (individual control unit types and process tag types) or SFC types (standardized sequence controls) in the form of instances.

The CFC editor supports the following types of standardized software modules:

- **Function block type**
  The function block types supplied with I&C libraries are used for I&C modeling of engineering equipment such as valves or motors. The smallest standardized software modules for multiple usage have connections for actuating and control signals and for parameter assignment and monitoring functions. Some also contain interlocking functions for automatic transition to defined safety settings.
- **Process tag type**
  Process tag types implemented with function blocks each represent a standardized CFC for the basic automation of specific I&C functions, e.g. for a level controller. Their instances can be modified centrally by the type-instance concept, and also manually adapted and linked.

Function (continued)

- **Control module type**
  The control module type (CMT) marks a new type of standardized software module. In conjunction with the Advanced Engineering System, this offers even more efficient engineering than classic process tag types. A CMT can contain blocks, charts, control variables (block I/Os such as signals and parameters) and messages.

Note:

The CFC is not just a component in the standard engineering software of the SIMATIC PCS 7 process control system. As a separate product, it can also be used together with other SIMATIC products in the context of Totally Integrated Automation (TIA). This SIMATIC CFC is a component of Catalog ST 70, section "SIMATIC Software" (article number of the current SIMATIC CFC V8.2, physical delivery: 6ES7658-1EX28-0YA5; online delivery: 6ES7658-1EX28-0YH5).

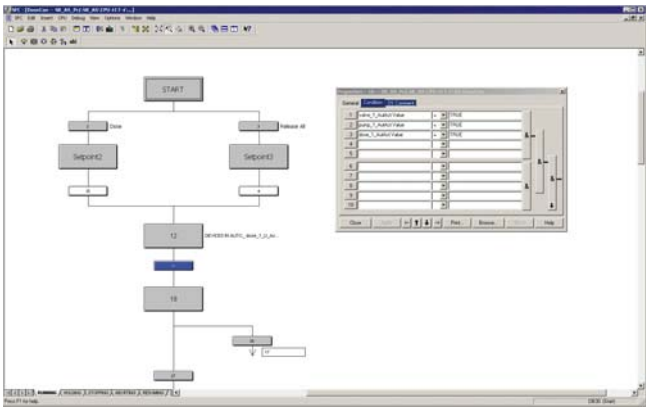

Sequential function chart

Sequential function chart (SFC)

The SFC editor is used for the graphical configuration and commissioning of sequential controls for batch production operations. It possesses convenient editing functions as well as powerful test and commissioning functions. An integrated graphical formula editor for arithmetic operations, Boolean algebra and mathematical functions enables calculations within the SFC.

Using a sequential control, basic automation functions usually created using CFC are controlled and selectively processed by means of changes in operating mode and status. Depending on the subsequent use, the sequential controls can be created either as a SFC plan or SFC type

SFC plan

The SFC can be used to implement sequence controls which can be applied once and which access several partial areas of the production plant. Each SFC plan contains standardized inputs and outputs for status information and for control by the user program or the user. The SFC plan can be positioned and linked as a block in the CFC. The required CFC block connections are selected by simple operations and connected to the steps or transitions of the step chains. A status management conforming to ISA 88 enables the configuration of up to 8 separate sequencers within a single SFC, e.g. for states such as RUNNING, HOLDING or ABORTING, or for different operating modes.

SFC type

SFC types are standardized sequential controls which can be applied repeatedly and which access one partial area of the production plant. They can be organized in libraries, and handled like normal function blocks, i.e. they can be selected from a catalog and positioned, interconnected and configured as an instance in a CFC plan.

Changes to the original automatically result in corresponding changes in all instances. An SFC type may contain up to 32 sequences. Using the function "Create/update block symbols", a block symbol is automatically positioned and interconnected in the associated process display for all SFC instances with HMI features.

I&C libraries

The use of library elements plays a major role in minimizing the amount of engineering required and thus also the project costs.

Two process control libraries are integrated in the standard engineering software of SIMATIC PCS 7:

- Advanced Process Library (current standard, pre-installed)
- PCS 7 Standard Library (former standard, can be installed subsequently if required)

Pre-configured and tested blocks, faceplates and symbols are organized in these libraries and form the basic elements for the graphic configuration of automation solutions.

The comprehensive range of blocks can be categorized as follows:

- Blocks for mathematical operations, analog and digital logic
- Interlocking blocks
- Technological function blocks with integral display, operation and signaling functions, e.g.:
  - Standard Control and Advanced Process Control blocks
  - Motor and valve blocks
  - Counter blocks
  - Dosing block
- Blocks for the integration of field devices
- Operator control and monitoring blocks
- Message and diagnostics blocks

Furthermore, pre-configured process tag types for process equipment such as pumps, valves, dosing units and controllers (cascade, spit-range) etc. extend the scope of library elements.

This is advantageous for adaptation of the user software following a system upgrade so that multiple versions of a library can exist side by side.

Function (continued)

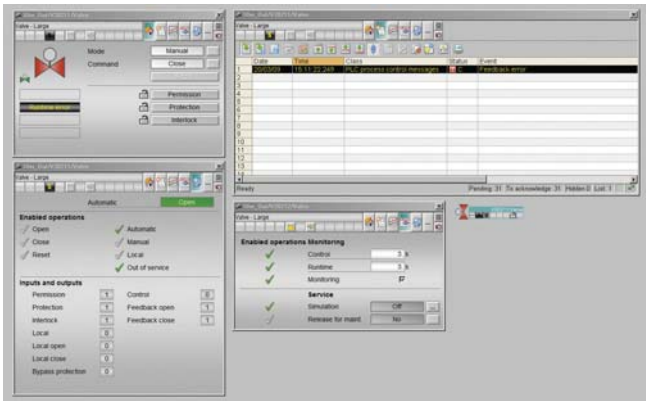

Examples of OS standard faceplates from the SIMATIC PCS 7 Advanced Process Library, valves

Advanced Process Library

The Advanced Process Library (APL) based on many years of experience of project engineers and plant owners takes into consideration current NAMUR recommendations and PNO specifications. Proven functions as well as visually attractive GUIs for a high level of operator convenience facilitate and also force interaction of operators with the plant.

Alternative, small versions of function blocks reduced to core functions, whose block icons and faceplates occupy less space in the process display, improve clarity in complex process displays.

Other features worth mentioning are:

- Special operating modes:
  - "Local" for integration and application of local control options
  - "Shutdown" for deactivating a measuring point for maintenance and service
- Several faceplate views:
  - "Preview" with information on the I/O signal status, automatic control, and possible/permissible operator inputs; display of real value for simulation
  - "Memo view" for temporary operator information
- Convenient interlocking blocks with initial signal information, can be directly called from the technological function blocks, e.g. from a motor block
- Flexible adaptation of functions in the library blocks
- Commissioning support through direct simulation on the operator station
- Protection against operator errors as the result of detailed grading of user privileges
- Explicit enabling/disabling of operations for a process tag for individual operator stations of the plant using the function "Local operator enabling"
- Integration of any compact drives and switch/starter objects via standard PROFIBUS profiles
- Coordination of multiple access operations, e.g. of SFC/SIMATIC BATCH, to equipment such as valves, dosing units or pumps
- Tacking of operator input windows facilitates repeated, successive operations
- Browser for the tag selection by status
- Customized online trends for display
- Reduced operator workload and faster operator control through tag groups assembled online for standard situations
  Note:
  SIMATIC PCS 7 Advanced Process Graphics V8.2 from Catalog ST PCS 7 T (SIMATIC PCS 7 Technology Components) is required for this.

Technology libraries

The additional technology libraries "Industry Library" and "Condition Monitoring Library" offered in Catalog ST PCS 7 T (SIMATIC PCS 7 technology components) expand the standard functionality of the APL. All display icons, function blocks and faceplates of these libraries are in APL design.

The Industry Library contains blocks for:

- Building automation (heating, ventilation, air conditioning)
- Operator control and monitoring using SIMATIC HMI Comfort Panels
- Integration of SIMATIC S7 Package Units and RTUs based on S7-300
- Interfacing of external Advanced Process Control systems
- Hierarchical multi-control room operation
- Other technological functions, e.g. for expanding measured value monitoring, or specifying a setpoint trend

The Condition Monitoring Library contains blocks for:

- Monitoring of centrifugal pumps (PumpMon)
- Monitoring of control valves (VlvMon)
- Online valve test during operation (PST)
- Monitoring for pressure loss, and early detection of blockages (PressDropMon)
- Detection of steady states of a dynamic process or steady state of a signal.

Advanced Process Control (APC) functions

In addition to numerous basic control functions, e.g. PID control, cascade control, split range control and ratio control, the I&C libraries of SIMATIC PCS 7 also provide function blocks and templates for advanced control functions at no extra cost.

Gain scheduling

The GainSched block allows continuous adjustment of the controller parameters in non-linear processes depending on the operating point. The block, which works in a similar manner to the polygon block, can derive three separate output values from one input value (measured variable X), which serve as regulating parameters for an interconnected controller block. Depending on the characteristic of the measured variable X, the GainSched changes the regulating parameters of the combined closed-loop controller in a sliding manner.

Override control

The outputs of two or more controllers are connected to a common final control element. The decision concerning which controller actually receives access to the final control element is made depending on the evaluation of the current process state.

4

Function (continued)

Lead-lag/feed-forward control

A strong interference which can be measured is compensated in advance by feed-forward control. The control is thus limited to model uncertainties and non-measurable faults.

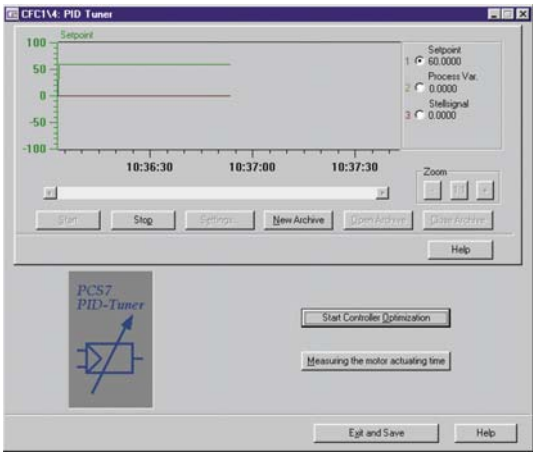

PID tuning

The integrated PID Tuner is suitable for optimization of the CTRL_PID and CTRL_S software controllers in circuits with PID, PI, or P control. On the basis of an experimentally determined model of the controlled system, favorable controller parameters for an optimum disturbance response or an optimum control response of the controller can be determined according to the procedure of absolute value optimization. Optimization can be carried out in manual or automatic mode. The typical controller values (actual value, setpoint, manipulated variable) are recorded by a trend function. The transient response of the controllers with the determined parameters can be checked by defining jumps. The controller parameters can be saved, and recalled as required.

Monitoring of the control quality

The ConPerMon block determines the control quality of a controller block (e.g. PID controller) on the basis of the online data of the setpoint, actual value and manipulated variable. Depending on deviation of the comparison quality, e.g. the control quality at commissioning, it can trigger a warning or an alarm. The faceplates of all control quality monitoring of a plant or a plant unit can be summarized in OS screens, which enables problems to be detected early on, analyzed, and specifically corrected.

Smith Predictor

The Smith Predictor can significantly improve the control quality of processes with long and relatively constant dead times. By eliminating the dead time component using a process model running parallel to the actual process, the controller can be designed for a process free of dead time, and thus set more effectively.

Model-based predictive multi-variable control

Model-based predictive multi-variable controllers (MPC) separately analyze the behavior of several interdependent variables for complex processes over a longer period. The results are used for optimized control of these variables. They eliminate adverse interactions which occur with separate control of the interdependent variables. Using a mathematical model of the process dynamics, MPCs are able to predict the future process response over a defined period of time (prediction horizon) and optimize a quality criterion on this basis.

The APL provides two multi-variable controllers with different functionalities and performance:

- MPC4x4 (ModPreCon) for up to 4 coupled manipulated variables and controlled variables
- MPC10x10 for up to 10 coupled manipulated variables and controlled variables and up to 4 measurable disturbance variables

Note:
Model-based multi-variable controllers make high demands on memory and processing time of the designated automation system. For that reason, please check the resources of the designated automation system before using them.

Graphics Designer

The project data for the engineering of the operator systems are organized with the SIMATIC Manager. All the data relevant to operation and monitoring of a process tag, such as messages and HMI variables, are generated automatically during definition of the automation function. A powerful graphics designer is available for the generation of process displays.

DOCPRO

DOCPRO is a tool for effective generation and management of plant documentation in accordance with defined standards. DOCPRO permits you to structure your project data in any manner, to process them in the form of standardized circuit manuals, and to print them in a uniform layout. You can incorporate your own cover sheets, layouts, graphics, logos or title block data. It is easy to control printing, i.e. you can specifically output individual parts of the project or all project data on the printer.

Ordering data

	Article No.
Software for a classic, dedicated engineering station without quantity limitation (not suitable for productive operation as an operator station)	
SIMATIC PCS 7 AS/OS Engineering Software V8.2 Unlimited POs, activated for 2-hour OS test mode	
5 languages (English, German, French, Italian, Spanish), software class A, runs with Windows 7 Ultimate 32/64-bit or Windows Server 2008 R2 Standard 64-bit, floating license for 1 user	
With SIMATIC PCS 7 Software Media Package	
• Physical delivery License key on USB flash drive, certificate of license, bundled with 1 × SIMATIC PCS 7 Software Media Package per order item	**6ES7658-5AX28-0YA5**
• Online delivery License key download and online certificate of license, combined with SIMATIC PCS 7 Software Media Package (software download and online certificate of license) Note: E-mail address required!	**6ES7658-5AX28-0YH5**
SIMATIC PCS 7 AS/OS Engineering Software ASIA V8.2 2 languages (English, Chinese), software class A, runs with Windows 7 Ultimate 32/64-bit or Windows Server 2008 R2 Standard 64-bit, floating license for 1 user	
With SIMATIC PCS 7 Software Media Package ASIA	
• Physical delivery ASIA license key on USB hardlock and certificate of license, bundled with 1 × SIMATIC PCS 7 Software Media Package ASIA per order item	**6ES7658-5AX28-0CA5**
SIMATIC PCS 7 AS Engineering Software V8.2 Unlimited POs	
6 languages (English, German, French, Italian, Spanish, Chinese), software class A, runs with Windows 7 Ultimate 32/64-bit or Windows Server 2008 R2 Standard 64-bit	
No SIMATIC PCS 7 Software Media Package	
• Physical delivery License key on USB flash drive, certificate of license	
- floating license for 1 user	**6ES7658-1AX28-0YB5**
- Rental license for 30 days (time billing independent of use)	**6ES7658-1AX28-0YA6**
- Rental License for 50 hours (time billing dependent on use)	**6ES7658-1AX28-0YB6**
• Online delivery License key download, online certificate of license Note: E-mail address required!	
- floating License for 1 user	**6ES7658-1AX28-0YH5**
- Rental license for 30 days (time billing independent of use)	**6ES7658-1AX28-0YH6**

	Article No.
Software for a combined engineering/operator station for small applications (suitable for productive operation as an operator station)	
SIMATIC PCS 7 E S Single Station V8.2 Including 250 AS/OS Runtime POs	
5 languages (English, German, French, Italian, Spanish), software class A, runs with Windows 7 Ultimate 32/64-bit or Windows Server 2008 R2 Standard 64-bit, single license for 1 installation	
With SIMATIC PCS 7 Software Media Package	
- Physical delivery License key on USB flash drive, certificate of license, bundled with 1 × SIMATIC PCS 7 Software Media Package per order item	**6ES7651-5AA28-0YA0**
- Online delivery License key download and online certificate of license, combined with SIMATIC PCS 7 Software Media Package (software download and online certificate of license) Note: E-mail address required!	**6ES7651-5AA28-0YH0**
SIMATIC PCS 7 ES Single Station ASIA V8.2 Incl. 250 AS/OS Runtime POs	
2 languages (English, Chinese), software class A, runs with Windows 7 Ultimate 32/64-bit or Windows Server 2008 R2 Standard 64-bit, single license for 1 installation	
With SIMATIC PCS 7 Software Media Package ASIA	
Physical delivery ASIA license key on USB hardlock, certificate of license, bundled with 1 × SIMATIC PCS 7 Software Media Package ASIA per order item	
• ASIA	**6ES7651-5AA28-0CA0**
• SN ASIA (including SOFTNET REDCONNECT)	**6ES7651-5AA28-6CA0**

For more information on the Software Media Package, see the section "Software Media and Logistics", "PCS 7 Software Packages".

More information

Regional product versions

see page 1/2

Overview

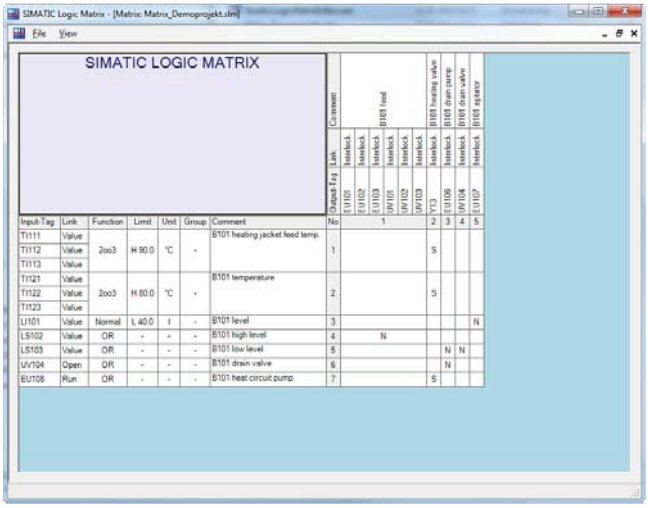

Logic Matrix Editor within the SIMATIC PCS 7 Engineering System

The SIMATIC PCS 7 Logic Matrix is based on the principle of logic creation with a cause and effect matrix - similar to the SIMATIC Safety Matrix for safety-related applications that has been established for years. It enables easy creation of the interlock logic between technological functions (e.g. control modules or equipment modules) of the automation project. There is no time-consuming configuring of the interlock logic in the CFC.

The SIMATIC PCS 7 Logic Matrix Tool, which can be opened from SIMATIC Manager, is used to create and edit the Logic Matrix oriented to one controller in each case and then to integrate the created matrix data at the chart level in the CFC project. The APL-based process tag types of the Control Module are linked with the cause or effect blocks of the Logic Matrix by templates created with the Link Type Editor of the Logic Matrix (Link Types).

The matrix table is comparable to a spreadsheet program, and the configuration engineer first enters the possible events (inputs) in the horizontal lines, and then configures their type and number, logic operations, timings, alarms and possible bypasses. He then defines possible actions (outputs) to these events in the vertical columns. The events and reactions are linked by simply clicking the cell at the intersection of the row and column.

The SIMATIC PCS 7 Safety Matrix Viewer enables operator control and monitoring of the Logic Matrix on the operator station (OS Single Station and OS Client). The Logic Matrix faceplate in APL design can be opened from the faceplates of the control module linked together via the cause and effect matrix.

Based on this causal chain, jumps from the Effect faceplate to the Cause faceplate and vice versa are possible via the Logic Matrix faceplate.

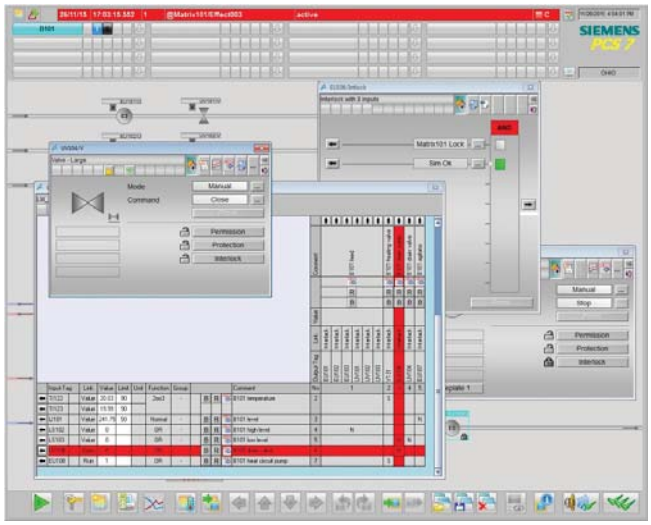

Faceplates of the Logic Matrix and the linked Control Module in the Logic Matrix Viewer of the SIMATIC PCS 7 Operator Station

Ordering data

	Article No.
SIMATIC PCS 7 Logic Matrix	
SIMATIC PCS 7 **Logic Matrix Viewer V8.2** Operator control and monitoring of the SIMATIC PCS 7 Logic Matrix via OS single station/OS client Runtime software, 2 languages (English, German), software class A, runs with Windows 7 Ultimate 32/64-bit or Windows Server 2008 R2 Standard 64-bit, single license for 1 installation No SIMATIC PCS 7 Software Media Package Physical delivery Software on DVD, license key on USB flash drive and certificate of license	**6ES7658-1JB28-2YA0**

Overview

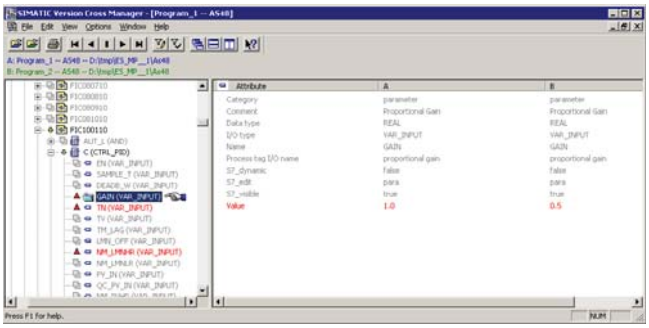

The SIMATIC Version Cross Manager is a user-friendly tool for determining the differences between various versions of individual projects or multi-projects by:

- tracing missing, additional or differing objects by comparing hardware configuration, communication, plant hierarchy, CFC/SFC plans, SFC details, block types, messages, global tags, signals and run sequences
- Graphic display of comparison results in a combination of tree and tabular formats
- Clear hierarchical structuring according to the technological hierarchy of the plant
- Color-coded identification of the differences

Ordering data

	Article No.
SIMATIC Version Cross Manager V8.2 6 languages (English, German, French, Italian, Spanish, Chinese), software class A, runs with Windows 7 Professional/Ultimate 32/64-bit or Windows Server 2008 R2 Standard 64-bit, floating license for 1 user	
No SIMATIC PCS 7 Software Media Package	
• Physical delivery License key on USB flash drive and certificate of license and TIA Engineering Toolset CD	**6ES7658-1CX28-2YA5**
• Online delivery License key download and online certificate of license Note: Email address required!	**6ES7658-1CX28-2YH5**
Upgrade package (only for TIA applications)	
SIMATIC Version Cross Manager Upgrade from V7.1 to V8.2 6 languages (English, German, French, Italian, Spanish, Chinese), software class A, runs with Windows 7 Professional/Ultimate 32/64-bit or Windows Server 2008 R2 Standard 64-bit, floating license for 1 user	
No SIMATIC PCS 7 Software Media Package	
• Physical delivery License key on USB flash drive, certificate of license and TIA Engineering Toolset CD	**6ES7658-1CX28-2YE5**
• Online delivery License key download, online certificate of license Note: E-mail address required!	**6ES7658-1CX28-2YK5**

More information

Upgrade

You can upgrade SIMATIC PCS 7 Engineering Systems with Engineering Software V8.0/V8.1 to Version 8.2 with SIMATIC PCS 7 Engineering Upgrade Packages AS/OS. The SIMATIC Version Cross Manager was last offered in Version 7.1, which is suitable for use in SIMATIC PCS 7 V7.1, V8.0 and V8.1. The further developed SIMATIC Version Cross Manager V8.2 is available for use in SIMATIC PCS 7 V8.2. The upgrade from SIMATIC Version Cross Manager V7.1 to V8.2 is a component of the Engineering Upgrade Package AS/OS V8.0/V8.1 to V8.2.

For more information see Catalog ST PCS 7, "Update/Upgrade Packages" chapter.

TIA applications

The Version Cross Manager is not only a software component of the SIMATIC PCS 7 Engineering System. As a separate product, it can also be used together with other SIMATIC products in the context of Totally Integrated Automation (TIA). This SIMATIC Version Cross Manager is a component of Catalog ST 70, section "SIMATIC software":

- SIMATIC Version Cross Manager V8.2, article number:
  - 6ES7658-1CX28-2YA5 (online delivery)
  - 6ES7658-1CX28-2YH5 (online delivery)

In the context of TIA, a separate SIMATIC Version Cross Manager Upgrade can be ordered:

- SIMATIC Version Cross Manager Upgrade from V7.1 to V8.2, article number:
  - 6ES7658-1CX28-2YE5 (physical delivery)
  - 6ES7658-1CX28-2YK5 (online delivery)

Overview

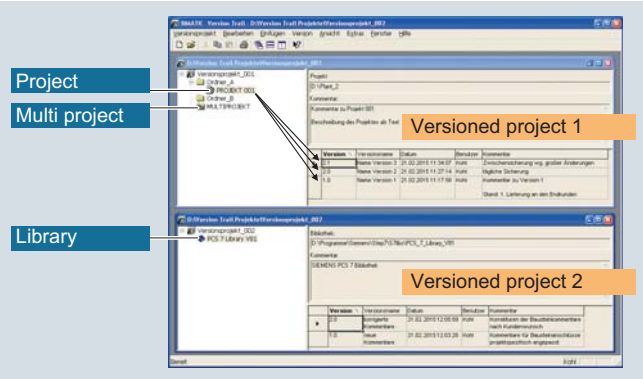

SIMATIC Version Trail is a software option for engineering which, together with the SIMATIC Logon central user administration, can assign a version history to libraries, projects and multi-projects.

Function

SIMATIC Version Trail tags the with a version ID when archiving, and enters the following information in the version history:

- Version
- Version name
- Date and time
- User
- Comment

Individual versions can be retrieved from the archive, and used further. SIMATIC Logon organizes the access protection.

Archiving and retrieval procedures can be automated on a time-driven basis. Retrieval of block parameters from the automation system can be coupled with the archiving procedure, but it can also be performed independently of this on a time-driven basis and with version assignment.

The version history managed by Version Trail can be displayed and printed. An already completed version cannot be modified at a later date. In conjunction with the Version Cross Manager, an archived version can be compared with an existing project or a second archived version.

Ordering data

	Article No.
SIMATIC Version Trail V8.2 6 languages (English, German, French, Italian, Spanish, Chinese), software class A, runs with Windows 7 Professional/Ultimate 32/64-bit or Windows Server 2008 R2 Standard 64-bit, floating license for 1 user	
No SIMATIC PCS 7 Software Media Package	
• Physical delivery License key on USB flash drive, certificate of license and TIA Engineering Toolset CD	**6ES7658-1FX28-2YA5**
• Online delivery License key download, online certificate of license Note: Email address required!	**6ES7658-1FX28-2YH5**
Upgrade package (only for TIA applications)	
SIMATIC Version Trail Upgrade from V8.0/8.1 to V8.2 6 languages (English, German, French, Italian, Spanish, Chinese), software class A, runs with Windows 7 Professional/Ultimate 32/64-bit or Windows Server 2008 R2 Standard 64-bit, floating license for 1 user	
No SIMATIC PCS 7 Software Media Package	
• Physical delivery License key on USB flash drive, certificate of license	**6ES7658-1FX28-2YE5**
• Online delivery License key download and online certificate of license Note: Email address required!	**6ES7658-1FX28-2YK5**

More information

Upgrade

You can upgrade SIMATIC PCS 7 Engineering Systems with Engineering Software V8.0/V8.1 to Version 8.2 with SIMATIC PCS 7 Engineering Upgrade Packages AS/OS. A component of these upgrade packages is also the upgrade for SIMATIC Version Trail FROM V8.0/V8.1 to V8.2.

For more information, see chapter 16 "Update/upgrade packages".

TIA applications

SIMATIC Version Trail is not only a software component of the SIMATIC PCS 7 Engineering System. It is also a separate product which can be used in the context of Totally Integrated Automation (TIA) together with other SIMATIC products. As such it is a component of Catalog ST 70, section "SIMATIC software":

- SIMATIC Version Trail V8.2, article number
  - 6ES7658-1FX28-2YA5 (physical delivery)
  - 6ES7658-1FX28-2YH5 (online delivery)

In the context of TIA, a separate SIMATIC Version Trail upgrade is available in each case:

- SIMATIC Version Trail Upgrade from V8.0/8.1 to V8.2, article number:
  - 6ES7658-1FX28-2YE5 (physical delivery)
  - 6ES7658-1FX28-2YK5 (online delivery)

Note:

Version Trail cannot be used as a stand-alone application; it only runs together with SIMATIC Logon (see section "IT security", "SIMATIC Logon", page 15/6).

Overview

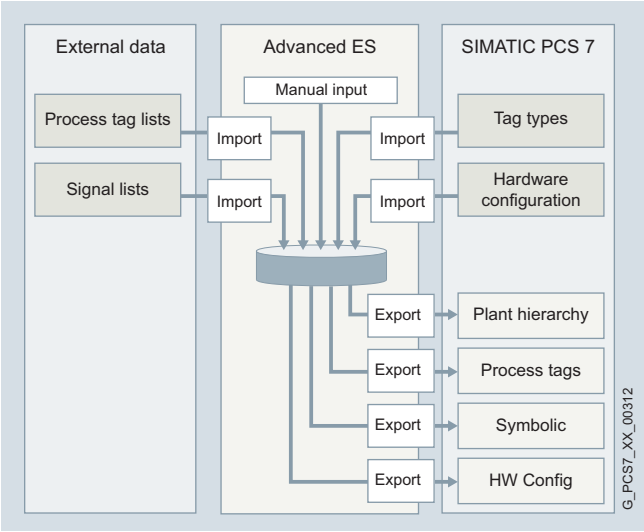

Data flow when using the Advanced Engineering System

Using the Advanced Engineering System (AdvES), consulting engineers and planning offices as well as end customers can significantly reduce their configuration and commissioning costs while simultaneously improving the engineering quality.

The SIMATIC PCS 7 Advanced Engineering System (AdvES) expands the functionality for plant configuration and can be started from a SIMATIC PCS 7 project in SIMATIC Manager. It acts as a link between

- Tools for basic and detailed planning, e.g. EPlan, ELCAD or SmartPlant, and
- Standard engineering tools from the SIMATIC PCS 7 engineering toolset, e.g. CFC, HW Config, plant hierarchy.

AdvES uses various data import options in order to collect existing engineering data from the SIMATIC PCS 7 process control system and from process tag and signal lists in Microsoft Excel format and to prepare these for utilization in the SIMATIC PCS 7 engineering system.

Benefits

Engineering and planning offices as well as end customers benefit from the use of SIMATIC PCS 7 Advanced Engineering System (AdvES) in particular through:

- Shorter configuration and commissioning times
  - Qualification is simplified due to standardized interfaces
  - Less coordination overhead with the planner
  - Short-term changes from bi-directional generation
- Increased quality
  - Errors are avoided due to standardized interfaces
  - Plausibility and data consistency can be checked
  - Changes to automation are reliably integrated in system planning
- No overhead for creating and maintaining proprietary tools and solutions

Function

Data from process tag and signal lists can be imported into AdvES in an automated manner. Integrated change management supports the import of modified data from Microsoft Excel multiple times.

AdvES recognizes process tags from Excel lists after a one-time assignment, automatically assigns them to process tag types of any PCS 7 project library automatically and then generates the following from this:

- PCS 7 process tag instances with signal and parameter settings
- Plant hierarchy (PH)
- Hardware configuration

Inconsistencies can be filtered out quickly by means of plausibility and data consistency checks, displayed in an easy-to-read log and then eliminated in a targeted manner.

Manual processing functions for editing plant hierarchies and process tags as well as for interconnecting signals between process tags allow completion of the import data. Numerous filter functions support data selection.

The AdvES streamlines mass data engineering through duplication of standardized software modules. Both the individual control module types (CMTs) and the classic process tag types are supported. AdvES is optimized for working with the control module types. Special editors for mass data processing relieve the project engineer from having to perform time-consuming routine work.

With the help of integrated design templates, the different table views of the AdvES data can also be displayed and printed as reports

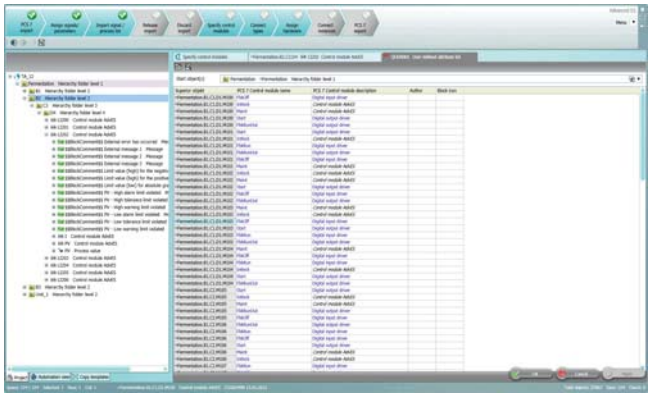

Integrated workflow management with progress bar in the header

The user is supported in carrying out tasks by integrated workflow management. The sequence and progress of execution are displayed in a header.

Function (continued)

Basic functions of the SIMATIC PCS 7 Advanced Engineering System (AdvES)

- Import of system planning data and SIMATIC PCS 7 engineering data
- Processing functions for the manual completion of imported data
- Simple interconnection of several process tags
- Generating of process tags from signal and process tag lists
- Generation of hardware configurations from signal lists
- Batch processing of process tags, signals, and parameters
- Automatic plausibility and consistency check
- Transfer of data into the SIMATIC PCS 7 Engineering System
- Reports on documentation updates
- Variant formation of individual SIMATIC PCS 7 control modules

Ordering data

	Article No.
SIMATIC PCS 7 Advanced Engineering System V8.0 (including SP1) For SIMATIC PCS 7 V8.0, V8.1 and V8.2	
Engineering software, 2 languages (English, German), software class A, runs with Windows 7 Ultimate 32/64-bit, Windows Server 2003 R2 Standard 32-bit or Windows Server 2008 R2 Standard 64-bit; floating license for 1 user	
No SIMATIC PCS 7 Software Media Package	
• Physical delivery License key on USB flash drive and certificate of license; software and documentation on DVD	**6ES7658-1GX08-2YA5**
• Online delivery License key download and online certificate of license Note: Email address required!	**6ES7658-1GX08-2YH5**

More information

Upgrade

You can upgrade SIMATIC PCS 7 Engineering Systems with Engineering Software V7.1, V8.0 or V8.1 to Version 8.2 with SIMATIC PCS 7 Engineering Upgrade Packages AS/OS.

However, the SIMATIC PCS 7 Advanced Engineering System Upgrade is not included in the SIMATIC PCS 7 Engineering Upgrade Package. It is offered as a separate product.

Since the SIMATIC PCS 7 Advanced Engineering System V8.0 (including SP) can be used in SIMATIC PCS 7 V8.0, V8.1 and V8.2, an upgrade is only currently available from V7.1 to V8.0 (including SP).

For more information, see chapter 16 "Update/upgrade packages".

Overview

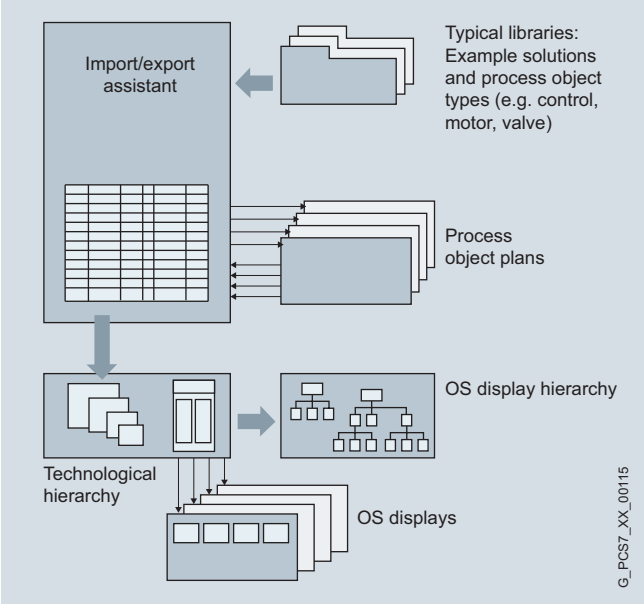

Efficient processing of mass data

The import/export assistant (IEA) and the more sophisticated Advanced Engineering System (AdvES) can be used for rational engineering of mass data. The IEA is based on the principle of multiple application of process tag types and example solutions. It is particularly suitable for plants with numerous process tags of the same type or with multiple plant components of the same type.

Following exporting of the PCS 7 project, the data can be modified, duplicated, adapted and also reimported using the IEA editor or a spreadsheet program such as Microsoft Excel.

Comparison with the parameters optimized during commissioning is possible at a later point in time.

Function

- Generation/modification of process tag types or example solutions
- Data import
- Data export
- Matching of process tags

Ordering data

	Article No.
SIMATIC PCS 7 Import/Export Assistant V8.2 6 languages (English, German, French, Italian, Spanish, Chinese), software class A, runs with Windows 7 Ultimate 32/64-bit or Windows Server 2008 R2 Standard 64-bit; floating license for 1 user	
No SIMATIC PCS 7 Software Media Package	
• Physical delivery License key on USB flash drive, certificate of license	**6ES7658-1DX28-2YB5**
• Online delivery License key download, online certificate of license Note: E-mail address required!	**6ES7658-1DX28-2YH5**

More information

Upgrade

You can upgrade SIMATIC PCS 7 Engineering Systems with Engineering Software V8.0/V8.1 to Version 8.2 with SIMATIC PCS 7 Engineering Upgrade Packages AS/OS. The upgrade for upgrading the SIMATIC PCS 7 Import/Export Assistant from V8.0/V8.1 to V8.2 is also part of these upgrade packages.

For more information, see chapter 16 "Update/upgrade packages".

Overview

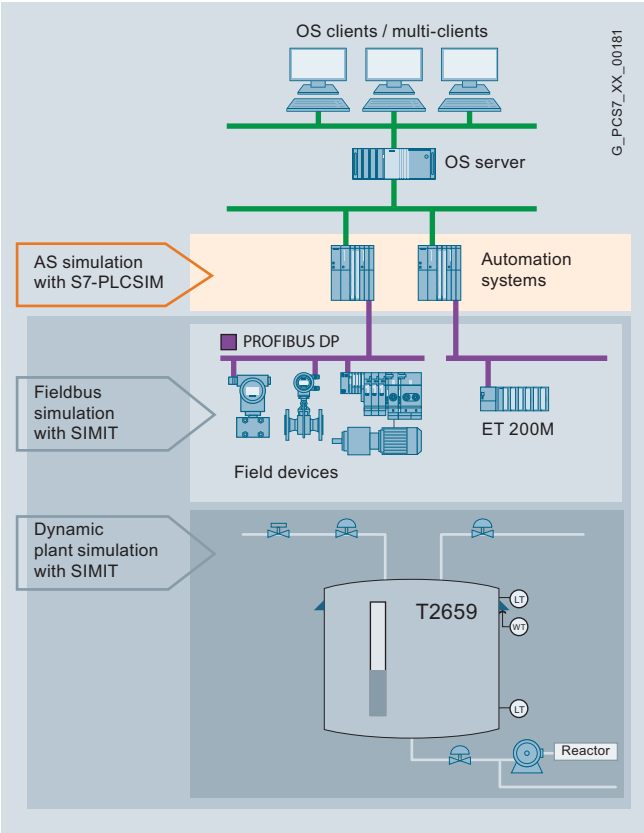

Overview of simulation software for SIMATIC PCS 7

The S7-PLCSIM simulation software supports functional testing of the user programs generated with CFC/SFC on a programming device/PC, irrespective of the availability of the target hardware. Detection and elimination of programming errors is thereby shifted to an earlier development phase. This enables faster commissioning, reduces the costs and increases the program quality.

Note:

S7-PLCSIM as of V5.4+SP5 Update 1 is compatible with SIMATIC PCS 7 V8.1 and V8.2.

Function

S7-PLCSIM simulates a SIMATIC S7 CPU with the associated process images. The program to be tested is loaded into the simulated S7 CPU in a manner identical to the procedure with real hardware, and is executed there. S7-PLCSIM is completely integrated in STEP 7. Process data can be exchanged between S7-PLCSIM and other Windows applications via an interface.

Ordering data

	Article No.
S7-PLCSIM V5.4 (including SP) Functional testing on PC/PG of programs created with CFC/SFC 5 languages (English, German, French, Italian, Spanish), software class A, runs with Windows 7 Professional/Ultimate 32/64-bit, Windows Server 2003/2003 R2 Standard 32-bit or Windows Server 2008 R2 Standard 64-bit, floating license for 1 user No SIMATIC PCS 7 Software Media Package Physical delivery Software and electronic documentation on CD, license key on USB flash drive, certificate of license	**6ES7841-0CC05-0YA5**

More information

Upgrade

S7-PLCSIM Versions 3.x, 4.x, 5.0, 5.2 or 5.3 can be upgraded to Version 5.4. In addition, a Software Update Service in the form of a subscription is offered for S7-PLCSIM.

For further information refer to

- Section "Update/upgrade packages", "Updates/upgrades asynchronous to the PCS 7 version, Upgrades for S7-PLCSIM Simulation Software" page 16/41
- Section "Software Media and logistics", "Software Update Service", page 1/4

Further test and simulation programs

SIMIT Simulation Framework for testing and commissioning of the project-specific user software on a partially virtual plant, see Catalog ST PCS 7 T (SIMATIC PCS 7 Technology Components), section "Simulations and training systems".

Operator system

5

Overview

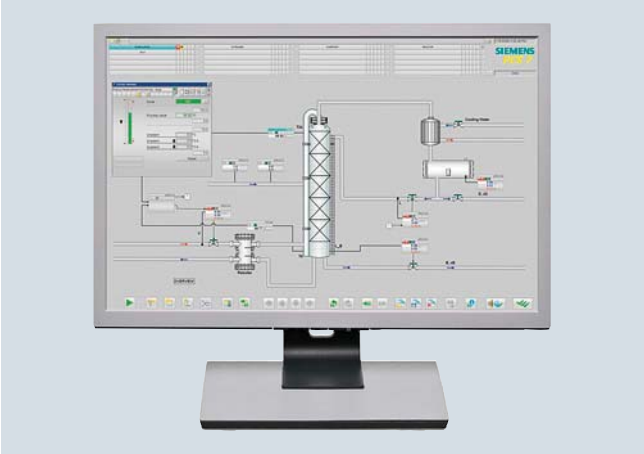

The operator system of the SIMATIC PCS 7 process control system allows easy and safe control of the process by the operating personnel. The operator can observe the process sequence by means of various views and intervene to control the system when necessary.

The operator system architecture is extremely variable and can be flexibly adapted to different plant architectures and customer requirements.

The basis is formed by perfectly coordinated operator stations for single-user systems (OS single stations) and for multi-user systems with client/server architecture.

The system software of the operator stations can be expanded by cumulative SIMATIC PCS 7 OS Runtime licenses for 100, 1 000 and 5 000 process objects (PO) up to following configuration limits:

- 8 500 POs per OS Single Station
- 12 000 POs per OS Server (with client/server architecture)

Benefits

- High-performance operator stations based on versatile, rugged SIMATIC PCS 7 Industrial Workstations, optimized for use in industrial environments
- Flexible, modular architecture with scalable hardware and software components for
  - Single-user system (OS single station) with up to 8 500 process objects
  - Flat system configurations based on a redundant OS Single Station pair, expandable with reference stations to up to 8 OS Single Stations.
  - Client/server multiple station systems with up to 18 OS servers/pairs of servers, each for 12 000 process objects (PO) and up to 40 OS clients
- High-performance archiving system based on Microsoft SQL Server with short-term archives and integrated archive backup, can be optionally expanded for long-term archiving with the Process Historian
- Self-diagnostics (health check) for monitoring important OS server applications
- Integration of modifications without interrupting runtime operations, and online testing through selective loading of redundant servers
- Optimized AS/OS communication:
  data transmission only following change in data, independent of AS reply cycle; suppression of nuisance alarms
- User-friendly process control and high operational reliability with support of multi-screen technology
- Extended status displays through combination of status/analog values with alarm information
- Highly effective alarm management provides support for operating personnel
  - Assignment of priorities with up to 16 message priorities as additional attribute to the message classes
  - Visual and audible suppression of messages which are irrelevant to a specific operating state (dynamic or manual)
  - Suppression of sensor/actuator alarms during startup or in event of malfunction
- Centralized user administration with access control and electronic signature
- Sign-of-life monitoring for subordinate systems connected to the plant bus
- System-wide time synchronization based on UTC (Universal Time Coordinated)

Design

All operator stations are based on modern SIMATIC PCS 7 Industrial Workstations optimized for use as OS single station, OS client or OS server. The SIMATIC PCS 7 Industrial Workstations are suitable for use in harsh industrial environments and are characterized by powerful industrial PC technology combined with a Windows Desktop operating system (Windows 7 Ultimate 32/64-bit or Windows 10 Enterprise 2015 LTSB 64-bit) or a Windows Server operating system (Windows Server 2008 R2 Standard 64-bit or Windows Server 2012 R2 Standard 64-bit) from Microsoft. Standard components and interfaces from the PC world offer generous scope for system-, customer- or sector-specific options and expansions.

The operating system and the following ES/OS software of the SIMATIC PCS 7 process control system are factory installed:

- Single station: PCS 7 Engineering Software for AS/OS including OS Runtime software
- Server: PCS 7 OS Software Server
- Client: PCS 7 OS Software Client

You only need the corresponding software licenses in order to use the pre-installed SIMATIC PCS 7 software.

Depending on the customer's particular requirements, you can equip an OS Single Station, OS Server or OS Client with optional hardware components, such as:

- Hardware and software components for redundant operation
- Signal module for audible and visual signaling of messages
- Smart card reader for access protection
- Multi-monitor graphics card for operation of up to 4 process monitors
- Process monitors for office and industrial environments

See section "Industrial Workstation/IPC" for ordering data and detailed information on the product package and technology of the SIMATIC PCS 7 Industrial Workstations.

Single-user system (OS single station)

In a single station system architecture, all operation and monitoring functions for a complete project (plant/unit) are concentrated in one station.

This OS single station can be operated on the plant bus together with other single-user systems or parallel to a multi-user system. Redundant operation of two OS single stations (SIMATIC PCS 7 Single Station Redundancy) and their expansion with reference stations into a flat system configuration with up to 8 OS Single Stations is also possible.

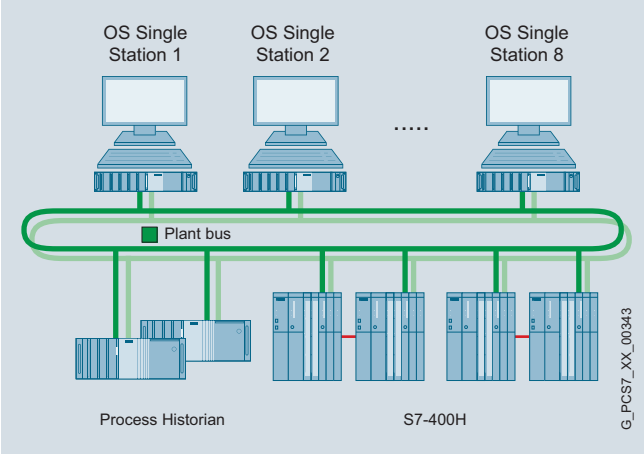

Example of a flat system architecture

Depending on the version (IE or BCE), the OS single station can be connected to the Industrial Ethernet plant bus via one of the following network components:

- IE: CP 1623 communication module (pre-installed in SIMATIC PCS 7 Industrial Workstation), CP 1628 or CP 1613 A2 for communication with up to 64 automation systems
- BCE: Standard Ethernet network card (10/100/1000 Mbps) and Basic Communication Ethernet for communication with up to 8 automation systems (not redundancy stations)

Two 10/100/1000 Mbps Ethernet RJ45 ports are always integrated onboard for use as desired.

The OS engineering is located as standard in a separate engineering system

Multi-user system with client/server architecture

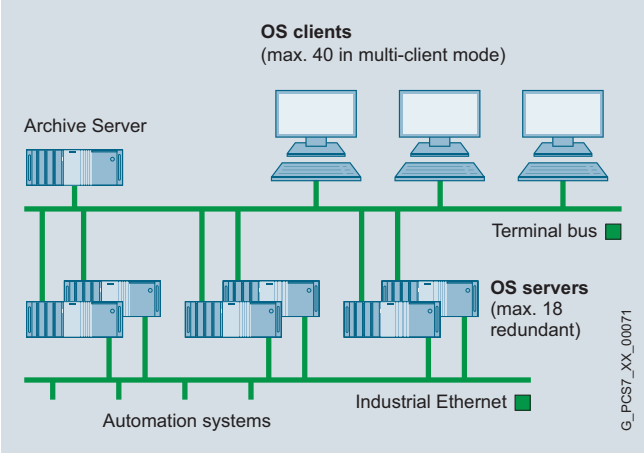

Example of multi-user system

A multiple station system consists of operator terminals (OS clients) which receive data (project data, process values, archive data, alarms and messages) from one or more OS servers over a terminal bus. The terminal bus can share the transmission medium with the plant bus or it can be designed as a separate bus (Industrial Ethernet with TCP/IP).

Design (continued)

In this architecture, redundant OS servers may be set up to meet higher availability requirements. Critical applications running on the OS server are monitored by Health Check for software faults. If a fault is detected, switchover to the redundant system is triggered. Synchronization of the redundant OS servers takes place automatically and at high speed.

OS clients can access the data of not only one OS server/server pair, but from several OS servers/pairs of servers simultaneously (multi-client mode). This makes it possible to divide a plant into technological units and to distribute the data accordingly to several OS servers/pairs of servers. In addition to scalability, the advantage of distributed systems is the ability to decouple plant areas from each other, which results in higher availability.

SIMATIC PCS 7 supports multi-user systems with up to 18 OS servers or 18 redundant OS pairs of servers. In multi-client mode, OS clients can access data from some or all of the 18 OS servers/pairs of servers in parallel (up to 40 OS clients with simultaneous access to all).

The OS servers are designed in addition with client functions which permit them to access the data (archives, messages, tags, variables) from the other OS servers of the multi-user system. This means that process graphics on one OS server can also be linked with variables on other OS servers (area-independent displays).

Like the OS single stations, the OS servers can be connected to the Industrial Ethernet plant bus using one of the following network components

- IE: CP 1623 communication module (pre-installed in SIMATIC PCS 7 Industrial Workstation), CP 1628 or CP 1613 A2 for communication with up to 64 automation systems
- BCE: Standard Ethernet network card (10/100/1000 Mbps) and Basic Communication Ethernet for communication with up to 8 automation systems (not redundancy stations)

Two 10/100/1000 Mbps Ethernet RJ45 ports onboard can be used to connect to the terminal bus.

Data archiving

The OS Single Stations and OS servers already include a high-performance archiving system, configurable at run-time, based on Microsoft SQL Server with cyclic archives for short-term archiving of process values (typically for 1 to 4 weeks) and messages/events (typically for 2 months). This may be combined with an external data archiving system for long-term data storage. The Process Historian offered in the section "Process data archiving and reporting" is available for this purpose.

The archive data can be saved on all storage Media supported by the operating system, for example, on a NAS (Network Attached Storage).

Technical specifications

Definitions	
OS tag	An OS tag or parameter is a defined memory location required for operating and monitoring with the operator system; values can be written into it and read from it (e.g. setpoint, actual value etc.).
Process object (PO)	A process object (PO) is synonymous with an operable and monitorable block. A PO usually has several OS tags (which can be operated and monitored). The number of OS tags differs depending on the block type. For example, motors or valves require fewer tags than closed-loop controls or dosing units.
Licensing	Licensing and license verification of the OS software for SIMATIC PCS 7 are based on the process objects. Every block fulfilling the following criteria is counted and calculated as a PO: • The block is not a driver block. • The block can be operated and monitored. • This block can handle messages. The license verification also takes into account the sum of all OS tags used.

OS quantity framework	
Max. number of OS single stations	8
Max. number of OS servers/pairs of servers	18
Max. number of automation systems per OS server/pair of servers	64
Max. number of OS clients in multi-client mode[1] (per multi-user system)	40
Max. number of monitors per operator station with multi-channel operation	4
Max. number of OS areas	64
Max. number of windows per monitor	1 to 16 (adjustable)
Number of trends per trend window	10
Selection time for OS area display (100 process symbols)	< 2 s
Max. number of process objects: • Per OS single station • Per OS server	 8 500 POs 12 000 POs
Max. number of configurable messages per server/single station	200 000
Number of process tags • Per OS single station • Per OS server • Per multi-user system	 approx. 5 100 Approx. 7 000 Approx. 126 000
Integral high-performance archive system (cyclic buffer), based on Microsoft SQL server, for: • Process value archiving (per OS server / single station) • Message archiving (per OS server / single station)	 Approx. 1 500/s Steady-state load approx. 10/s Message peak approx. 3 000 / 4 s

[1] If every OS client has access to all OS servers/pairs of servers

Overview

The SIMATIC PCS 7 Industrial Workstation, the operating system, and the OS software are matched to one another in accordance with the application as OS single station, OS server or OS client.

Design

The OS standard software is already pre-configured for the corresponding OS single station, OS server or OS client as the target system, and pre-installed on it. You only need the corresponding software licenses in order to use it.

This basic level can be extended using additive software components and licenses.

You can equip OS Single Stations and OS Clients, for example, with SIMATIC PCS 7 SFC Visualization and Safety Matrix Viewers.

Redundant system configurations are also possible with OS single stations and OS servers. See the subsection "OS redundancy" in the section "Operator system" for details, from page 5/13.

The following tables provide a selection aid for ordering an operator station. Depending on whether a redundant or non-redundant design is selected, the tables indicate the respectively required number of

- SIMATIC PCS 7 Industrial Workstations
- Licenses for OS standard software
- Volume licenses (quantity options)
- Licenses for optional supplementary OS software

Single-user system		
OS Single Station with Windows 7 Ultimate 64-bit or Windows 10 Enterprise 2015 LTSB 64-bit operating system	**Redundancy**	
	without	**with**
SIMATIC PCS 7 Industrial Workstation including operating system, alternatives		
• SIMATIC PCS 7 ES/OS IPC[1] BCE with BCE communication for up to 8 automation systems (no redundancy stations)	1	2
• SIMATIC PCS 7 ES/OS IPC[1] IE with Industrial Ethernet communication	1	2
Additional IE communication software for SIMATIC PCS 7 ES/OS IPC[1] IE		
SIMATIC NET HARDNET IE S7 REDCONNECT PowerPack	1	2
OS standard software		
SIMATIC PCS 7 OS Software Single Station	1	–
SIMATIC PCS 7 Single Station Redundancy	–	1
Volume licenses and supplementary OS software (optional)		
SIMATIC PCS 7 OS Runtime License for adding OS Runtime POs	1	2
SIMATIC PCS 7 OS Archive for expansion of short-term cyclic buffer archive	1	2
SIMATIC PCS 7 SFC Visualization	1	2
SIMATIC Safety Matrix Viewer	1	2

Multi-user system with client/server architecture		
OS Server with Windows Server 2008 R2 Standard 64-bit or Windows Server 2012 R2 Standard 64-bit operating system	**Redundancy**	
	without	**with**
SIMATIC PCS 7 Industrial Workstation including operating system, alternatives		
• SIMATIC PCS 7 OS Server IPC[1] BCE with BCE communication for up to 8 automation systems (no redundancy stations)	1	2
• SIMATIC PCS 7 OS Server IPC[1] IE with Industrial Ethernet communication	1	2
Additional IE communication software for SIMATIC PCS 7 OS Server IPC[1] IE		
SIMATIC NET HARDNET IE S7 REDCONNECT PowerPack	1	2
OS standard software		
SIMATIC PCS 7 OS Software Server	1	–
SIMATIC PCS 7 OS Software Server Redundancy	–	1
Volume licenses (optional)		
SIMATIC PCS 7 OS Runtime License for adding OS Runtime POs	1	2
SIMATIC PCS 7 OS Archive for expansion of short-term cyclic buffer archive	1	2
OS Client with Windows 7 Ultimate 64-bit or Windows 10 Enterprise 2015 LTSB 64-bit operating system; terminal bus connection on-board		
SIMATIC PCS 7 Industrial Workstation/IPC including operating system, alternatives		
• SIMATIC PCS 7 OS Client IPC[1], alternatively with - Onboard standard graphics - Multi-monitor graphics card "2 screens" or "4 screens"	1	
• SIMATIC PCS 7 BOX OS Client 627D, alternatively - without panel - with panel	1	
• SIMATIC PCS 7 OS Client 427D/477D (Microbox)	1	
OS standard software		
SIMATIC PCS 7 OS Software Client (software license for PCS 7 BOX OS Client 627D in scope of supply)	1 or 0 (for PCS 7 OS client 627D)	
Supplementary OS software (optional)		
SIMATIC PCS 7 SFC Visualization	1	
SIMATIC Safety Matrix Viewer	1	
SIMATIC PCS 7 Logic Matrix Viewer (see "Engineering", "SIMATIC PCS 7 Logic Matrix" section, page 4/12)	1	

[1] IPC stands for one of the SIMATIC IPC types from the product range in the section "Industrial Workstation/IPC, Pre-configured bundles, SIMATIC Rack PC" that are authorized for SIMATIC PCS 7 V8.2.

Note on Microsoft SQL Server software

The "SQL Server" software from Microsoft which is delivered together with SIMATIC PCS 7 is exclusively intended for this process control system. It must not be used in any other context without previous written approval by Siemens.

OS Standard Software for Single Station/Server/Client

Overview

The OS standard software is adapted to the SIMATIC PCS 7 Industrial Workstations offered (OS single station, OS server and OS client).

It can be adapted to plants of various sizes by adding cumulative SIMATIC PCS 7 OS Runtime licenses for sets of 100, 1 000 and 5 000 process objects (PO). The expansion limits are

- 8 500 POs per OS Single Station
- 12 000 POs per OS Server

The high-performance circular buffer archiving system integrated in the OS standard software for OS single station and OS server for the temporary archiving of up to 512 tags can be expanded up to the expansion limit of 10 000 tags with cumulative SIMATIC PCS 7 OS volume licenses.

The OS standard software for a redundant pair of OS servers or two redundant OS single stations is combined in a package (SIMATIC PCS 7 OS Software Server Redundancy or SIMATIC PCS 7 OS Software Single Station Redundancy). See section "OS redundancy" for details, from page 5/13.

Subsequent conversion of the software license from OS Single Station to OS Server

It frequently happens in practice that systems based on OS single stations are later expanded to client-server configurations. The SIMATIC PCS 7 OS Software ConversionPack Single Station to Server allows you to subsequently convert the software license of your existing OS single station to an OS server license.

Function

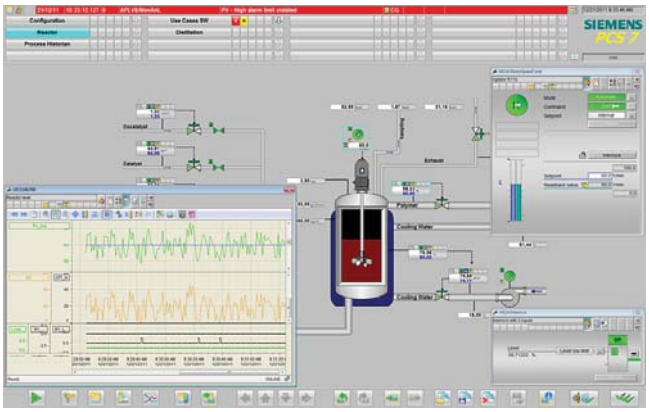

OS process control with freely-positionable windows

Graphical user interface (GUI)

The predefined user interface of the operator system has all the features typical of a control system. It is multilingual, clearly structured, ergonomic and easy to understand. Operators can survey the process extremely easily, and rapidly navigate between different views of the plant. The system supports them in this process with hierarchical display structures that can be configured as required. These facilitate the direct selection of lower-level areas during process control. The current position within the hierarchy can always be recognized in a window of the Picture Tree Manager.

Process displays and process tags can also be called directly by their name, or by a "Loop-in-alarm" starting from a selected message An online language selector permits the user to change the display language during runtime.

A standard view and a server view are available for the technological representation of a plant, each with variously designed area overviews. Features provided in both views include:

- Message line for the last received message, configurable for priority-based display of message with highest message class or priority
- Date, time and name of the operator
- Area overview; number of displayed areas depends on resolution: up to 36 (lowest/XGA), up to 144 (highest/WQXGA)
- Working area for plant displays and movable windows for faceplates, trends, messages etc.
- Button area

A configuration dialog allows you to assemble customer-specific function key sets, integrate user-created function keys, and set necessary operator input rights for the button area. These customer-specific settings are retained when the Operator System is upgraded.

The project editor in the operator system offers a wide range of different image formats and resolutions for displaying process graphics:

Graphic standard	Format	Resolution	Support of multi-monitor mode
XGA	4:3	1024 × 768	Yes
XGA+	4:3	1152 × 864	Yes
SXGA	5:4	1280 × 1024	Yes
UXGA	4:3	1600 × 1200	Yes
WSXGA+	16:10	1680 × 1050	Yes
HD 1080 (Full HD)	16:9	1920 × 1080	Yes
WUXGA	16:10	1920 × 1200	Yes
WQXGA	16:10	2560 × 1600	--

Their use depends on how the graphics controller of the operator station and the process monitors controlled by it are designed.

The representative functional display of the plant is supported by a high-quality, modern design. The global appearance can be set using predefined or user-specific designs: color palette, colors, styles (fill patterns), optical effects (2D/3D, shading, transparency, colored identification of an image object when selected, etc.). These can be changed locally for each image object.

In addition, the design is fundamentally influenced using a wide range of attractive elements provided by the Graphics Designer when configuring in the engineering system:

- Object palettes with styles, controls (applications for control and monitoring, e.g. for curve and message display), standard objects and smart objects
- Global symbol library with standardized display objects for plants and units
- Symbols and faceplates from the SIMATIC PCS 7 libraries, especially the Advanced Process Library (APL)

Customized object properties of APL symbols can be managed in a library copy and transferred from there again after an upgrade.

Function (continued)

Process tag browser

The SIMATIC PCS 7 process tag browser enables status information from APL-based process tags to be displayed, filtered and sorted. Process tags that have a certain status can then be quickly identified and selected. The faceplate of a process tag can be selected directly in the process image via the Loop In function. The query results of the process tag browser can be saved and printed out.

TrendControls function for table displays and curve displays

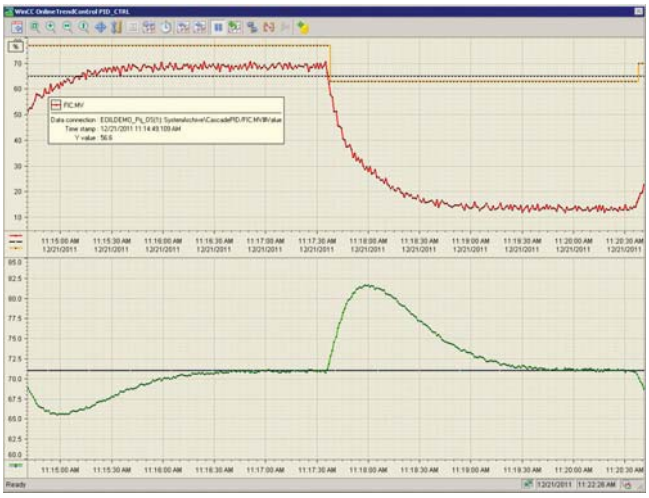

Trend window on the operator station

With TrendControls the operator can display archived values:

- Archive tags from the process value archive
- Online values of process tags from tag management

The display is in relation to time (table/trend window) or in relation to another value (function window).

The time can be defined statically (absolute, as configured) or dynamically (in relation to the actual system time) as:

- Start and end times
- Start time and period
- Start time and number of measuring points

All TrendControls have scrolling functions and a function for directly selecting the start or end.

During runtime, operators can individually adapt the TrendControls functions which have already been predefined during plant configuration, and save the settings globally or user-specific. They are able to change the data link during runtime, and to access other data. It is also possible to integrate exported archive databases online.

The displayed data can be processed further by:

- Exporting per CSV file
- Output in a predefined print job

TrendControls functions can also be combined with a ruler window. Depending on the selection of a time or time range in the trend/table window using a ruler, it shows additional information in three views:

- Coordinate window with X and Y coordinates of the curve points at the points of intersection of the rulers
- Statistics range window with the values lying within a selected range
- Statistics window with statistical information on a selected range: minimum, maximum, average, standard deviation, integral

APL Operator Trend Control

The APL Operator Trend Control coordinated with the Advanced Process Library offers another option to the operator for flexible online compilation of trends. The values for the trend display are selected with a simple mouse click, in which case the value range and unit are adopted automatically by the process tag. The selection made can be subsequently adjusted by adding and removing values. In addition, messages corresponding to the trend selection can be called.

AlarmControl function for message display and processing

Up to 200 000 messages can be configured per OS single station/OS server:

- Predefined system messages, triggered by a system event
- Individual or group messages, initiated by a change in process states
- Operator input messages, resulting from the manual operation of objects

The message system integrated in the operator system records these process messages and local events, saves them in message archives, and displays them by means of the freely-configurable AlarmControl function (message view/window).

Operators can use the toolbar to select various standardized lists with integral scrolling function:

- Entered state list: currently present, unacknowledged messages
- Acknowledged list: currently present, acknowledged messages
- Exited state list: not yet acknowledged, but already exited messages
- Operator list: current and archived operator input messages
- Process control list: current and archived I&C messages
- Chronicle: all currently present and archived messages arranged in chronological order
- List of manually or automatically suppressed messages
- List of messages to be suppressed when they occur

Function (continued)

The AlarmControl function displays:

- Each message in a separate message line
- Message state and color according to the configured message class (e.g. fault requiring acknowledgment) and message type (e.g. alarm or warning)
- Selected message blocks, each in a separate column:
  - System blocks: system data such as date and time, priority, triggering CPU/station, user name, loop-in-alarm, message state (UP/DOWN), acknowledgment status (acknowledged/ not yet acknowledged, duration from UP to DOWN/acknowledged)
  - Process value blocks: current process value at time of message, e.g. temperature
  - User text blocks: 255 characters of text, e.g. message text with fault location and cause of malfunction
- Status and info text represented as symbol

Parallel to the display, all messages recorded during runtime and their changes in state can be documented in chronological order in a message sequence log.

Flexible setting options for audible output and priorities which can be defined using signal tags support the signaling of messages through a sound card or by controlling external horns via a signal module.

Operators can individually adapt the AlarmControl function during runtime by filtering, selecting or sorting the display according to the contents of individual message blocks, e.g. chronologically according to message priority or fault location, and save the settings globally or user-specific. It is also possible to integrate exported archive databases online.

The displayed data can be processed further by:

- Exporting per CSV file
- Output in a predefined print job

A configuration dialog allows you to centrally specify the basic settings for all global alarm lists of the project, e.g. visibility, format, column order and column sorting These settings are retained when an upgrade is performed.

After a power failure, the last messages (e.g. 60) can be reloaded from the message archive to the message window. Thus, when the system is restarted, the last message map prior to the power failure is reconstructed.

With large quantity frameworks and a high number of messages, the following measures can be used to noticeably reduce the operator workload by reducing the relevant messages and improving the transparency:

- Visual and audible hiding of messages which are of reduced importance in certain situations for the safe and fault-free operation of the plant, e.g. process signals (logging and archiving are not influenced):
  - Dynamically, i.e. depending on pre-configured definition for up to 32 operating states (Smart Alarm Hiding)
  - Manually, for a limited period
- Assignment of priorities using up to 16 message priorities as additional attribute to the known message classes
- Intentional blocking and enabling of messages from an individual process tag or all process tags of the display/area by the operator in the event of faults on a sensor/actuator or during commissioning (recording of blocking and enabling in the operator activity log)

The "Loop-in-alarm" and "Select display using process tag" functions support the quick evaluation and resolution of faults. Using "Loop-in-alarm", the operator can jump directly from a message selected in the message window to the process display with the object which caused the fault, and can then call up the associated faceplate (loop display) through the process tag whose block icon is colored (cyan). The faceplate window (loop display) can be anchored so that it remains visible even when the display is changed.

Group displays visually signal the messages currently present in the process display. They also provide information on whether messages are disabled or not.

The last message to have arrived – or the message with the highest priority when alarm priorities are utilized – is displayed at the top edge of the standard view. Using the button "Extended message line", the AlarmControl function can be displayed as a window with all received messages. A list of all messages currently present with maximum priority 16 can also be directly called using a button.

Message window on the operator station

Reporting and logging system

The project created during configuring is documented with the reporting system. The logging system allows an easy-to-read printout of data acquired during operation. Different types of predefined logs are available:

- Message sequence log
- Message and archive log
- Measured value log
- Operator activity log
- System message log
- User log

However, a page layout editor can be used to create completely new page layouts or to individually adapt predefined ones. Log objects to be printed are simply selected from the editor's object palette, positioned and configured.

Function (continued)

The log objects are categorized as follows:

- Host log objects, e.g.
  - Static objects (circle, rectangle etc.)
  - Dynamic objects that are assigned current values during output
  - System objects (date/time, project name etc.)
  - Special runtime log objects
- OS-specific log objects, e.g.:
  - Control objects (windows for messages, tables, trends, functions, and user data)
  - Current value of a process tag
  - Contents of user archives
  - Embedded layout
  - Hardcopy
- Log objects for integration of external data, e.g.:
  - CSV provider (CSV data as table or curve)
  - ODBC data source (field as text or table)
  - COM provider (COM objects as text, table or image)

The current data of the log defined in the page layout is output on the printer by means of a predefined or self-generated print job. Prior to output on the printer, the logs can be saved in EMF format and displayed as a preview on the screen. Print jobs can be started manually, time-controlled or event-controlled. Operators are able to scan the status of the print jobs online.

Data archiving

The high-performance archiving system, configurable at runtime, in the OS standard software of OS Single Stations and OS Servers temporarily records process values and messages/events (alarms) in cyclic archives. Intervals of approximately 1 to 4 weeks for process values and approximately 2 months for alarms are typical for this short-term archiving. Data from the cyclic archives can be exported time-controlled or event-controlled to the Process Historian for permanent archiving. See the "Process data archiving and reporting" section for information on this.

Central user administration, access control and electronic signature

With SIMATIC Logon, the operator system has central user administration with access control that complies with the validation requirements of 21 CFR Part 11. The administrator can divide the users into groups and assign differently defined access rights (roles) to these groups. The operator obtains the specific rights when logging on within the scope of the access control. Apart from the keyboard, an optional smart card reader, for example, can be used as the logon device. In addition, SIMATIC Logon offers the "electronic signature" function.

SIMATIC Logon is fully integrated in SIMATIC PCS 7. In the context of SIMATIC PCS 7, no software licenses need be ordered for this. For more information on SIMATIC Logon as well as ordering data for an optional smart card reader, see "Expansion components, smart card reader" in the section "Industrial Workstation/IPC".

Sign-of-life monitoring

With the "Sign-of-life monitoring" function, the operator system is able to monitor the correct operation of all lower-level systems connected to the plant bus. A graphical plant configuration display shows the operating state of each monitored component. Additional functionality in this respect is offered by the SIMATIC PCS 7 Maintenance Station (see chapter 7 "Plant Device Management").

Time-of-day synchronization

TC400 central plant clock

Together with a SICLOCK time generator (see catalog "Add-ons for SIMATIC PCS 7"), the operator system of the SIMATIC PCS 7 process control system can implement the system-wide synchronization on the basis of UTC (Universal Time Coordinated). This feature is especially beneficial for widely distributed plants present in different time zones, e.g. pipelines.

OS Standard Software for Single Station/Server/Client

Ordering data	Article No.
OS Software Single Station	
SIMATIC PCS 7 **OS Software Single Station V8.2** **with 100 OS Runtime POs** 5 languages (English, German, French, Italian, Spanish), software class A, runs with Windows 7 Ultimate 32/64-bit or Windows 10 Enterprise 2015 LTSB 64-bit, single license for 1 installation	
With SIMATIC PCS 7 Software Media Package	
• Physical delivery License key on USB flash drive, certificate of license, bundled with 1 × SIMATIC PCS 7 Software Media Package per order item	**6ES7658-2AA28-0YA0**
• Online delivery License key download and online certificate of license, combined with SIMATIC PCS 7 Software Media Package (software download and online certificate of license) Note: E-mail address required!	**6ES7658-2AA28-0YH0**
SIMATIC PCS 7 OS Software **Single Station ASIA V8.2** **incl. 100 OS Runtime POs** 2 languages (English, Chinese), software class A, runs with Windows 7 Ultimate 32/64-bit or Windows 10 Enterprise 2015 LTSB 64-bit, single license for 1 installation	
With SIMATIC PCS 7 Software Media Package ASIA	
Physical delivery ASIA license key on USB hardlock and certificate of license, bundled with 1 × SIMATIC PCS 7 Software Media Package ASIA per order item	
• ASIA	**6ES7658-2AA28-0CA0**
• SN ASIA (including SOFTNET REDCONNECT)	**6ES7658-2AA28-6CA0**
OS Software Server	
SIMATIC PCS 7 **OS Software Server V8.2** **incl. 100 OS Runtime POs** 5 languages (English, German, French, Italian, Spanish), software class A, runs with Windows Server 2008 R2 Standard 64-bit or Windows Server 2012 R2 Standard 64-bit; single license for 1 installation	
With SIMATIC PCS 7 Software Media Package	
• Physical delivery License key on USB flash drive, certificate of license, bundled with 1 × SIMATIC PCS 7 Software Media Package per order item	**6ES7658-2BA28-0YA0**
• Online delivery License key download and online certificate of license, combined with SIMATIC PCS 7 Software Media Package (software download and online certificate of license) Note: E-mail address required!	**6ES7658-2BA28-0YH0**

Ordering data	Article No.
SIMATIC PCS 7 OS Software **Server ASIA V8.2** **incl. 100 OS Runtime POs** 2 languages (English, Chinese), software class A, runs with Windows Server 2008 R2 Standard 64-bit or Windows Server 2012 R2 Standard 64-bit, single license for 1 installation	
With SIMATIC PCS 7 Software Media Package ASIA	
Physical delivery ASIA license key on USB hardlock and certificate of license, bundled with 1 × SIMATIC PCS 7 Software Media Package ASIA per order item	
• ASIA	**6ES7658-2BA28-0CA0**
• SN ASIA (including SOFTNET REDCONNECT)	**6ES7658-2BA28-6CA0**
Volume licenses (quantity options)	
Runtime licenses for PO expansion for OS Software Single Station/ OS Software Server	
SIMATIC PCS 7 **OS Runtime License** For extending the OS Runtime POs, cumulative	
Language-neutral, software class A, single license for 1 installation	
No SIMATIC PCS 7 Software Media Package	
• Goods delivery License key on USB flash drive and certificate of license	
- 100 POs	**6ES7658-2XA00-0XB0**
- 1 000 POs	**6ES7658-2XB00-0XB0**
- 5 000 POs	**6ES7658-2XC00-0XB0**
• Online delivery License key download and online certificate of license Note: E-mail address required!	
- 100 POs	**6ES7658-2XA00-0XH0**
- 1 000 POs	**6ES7658-2XB00-0XH0**
- 5 000 POs	**6ES7658-2XC00-0XH0**
Expansion of integrated high-performance circular buffer archive (512 tags) of OS Single Station and OS Server	
SIMATIC PCS 7 OS Archive Cumulative archive licenses, independent of language, software class A, single license for 1 installation	
No SIMATIC PCS 7 Software Media Package	
• Goods delivery License key on USB flash drive and certificate of license	
- 1 500 tags	**6ES7658-2EA00-2YB0**
- 5 000 tags	**6ES7658-2EB00-2YB0**
- 10 000 tags	**6ES7658-2EC00-2YB0**
- 30 000 tags	**6ES7658-2ED00-2YB0**
• Online delivery License key download and online certificate of license Note: E-mail address required!	
- 1 500 tags	**6ES7658-2EA00-2YH0**
- 5 000 tags	**6ES7658-2EB00-2YH0**
- 10 000 tags	**6ES7658-2EC00-2YH0**
- 30 000 tags	**6ES7658-2ED00-2YH0**

Ordering data

	Article No.
OS Software Client	
SIMATIC PCS 7 **OS Software Client V8.2** 5 languages (English, German, French, Italian, Spanish), software class A, runs with Windows 7 Ultimate 32/64-bit or Windows 10 Enterprise 2015 LTSB 64-bit, floating license for 1 user	
No SIMATIC PCS 7 Software Media Package	
• Goods delivery License key on USB flash drive and certificate of license	**6ES7658-2CX28-0YB5**
• Online delivery License key download and online certificate of license Note: E-mail address required!	**6ES7658-2CX28-0YH5**
SIMATIC PCS 7 **OS Software Client ASIA V8.2** 2 languages (English, Chinese), software class A, runs with Windows 7 Ultimate 32/64-bit or Windows 10 Enterprise 2015 LTSB 64-bit, floating license for 1 user	
No SIMATIC PCS 7 Software Media Package ASIA	
• Physical delivery ASIA license key on USB hardlock, certificate of license	**6ES7658-2CX28-0CB5**

	Article No.
Conversion of the software license from OS Single Station to OS Server	
SIMATIC PCS 7 **OS Software ConversionPack Single Station to Server V8.2** For conversion of an operator station from OS Single Station to OS Server Supports all languages of the OS Software Single Station, software class A, runs with Windows Server 2008 R2 Standard 64-bit or Windows Server 2012 R2 Standard 64-bit, single license for 1 installation	
No SIMATIC PCS 7 Software Media Package	
• Goods delivery License key on USB flash drive and certificate of license	**6ES7658-2BA28-0YD0**
• Online delivery License key download and online certificate of license Note: E-mail address required!	**6ES7658-2BA28-0YJ0**

For more information on the Software Media Package, see section "Software Media and Logistics", "Software Packages", page 1/2.

More information

Regional product versions

see page 1/2

SFC Visualization

Overview

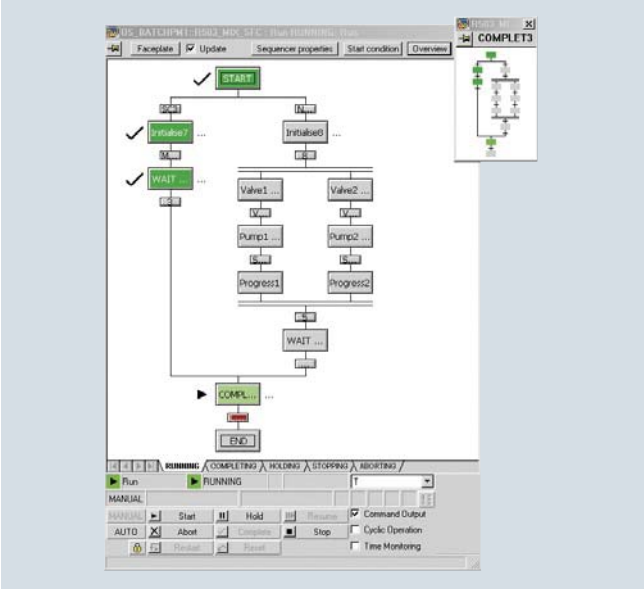

The OS standard software can be expanded with the SIMATIC PCS 7 SFC Visualization. This allows you to display and operate configured sequential controls on the engineering system. No additional configuration work is necessary for this.

In an overview display it is possible, for example, to open step and transition displays and to present step comments or dynamically supplied step enabling conditions.

Ordering data

	Article No.
SIMATIC PCS 7 **SFC Visualization V8.2** For displaying and operating SFC sequence controls on an operator station 6 languages (English, German, French, Italian, Spanish, Chinese), software class A, runs with Windows 7 Ultimate 32/64-bit, Windows Server 2008 R2 Standard 64-bit or Windows Server 2012 R2 Standard 64-bit, floating license for 1 user No SIMATIC PCS 7 Software Media Package	
• Goods delivery License key on USB flash drive and certificate of license	**6ES7652-0XD28-2YB5**
• Online delivery License key download and online certificate of license Note: E-mail address required!	**6ES7652-0XD28-2YH5**

Overview

OS single stations and OS servers can have a redundant design if necessary. The following program packages are available:

- SIMATIC PCS 7 Single Station Redundancy for setup of redundant OS Single Stations
- SIMATIC PCS 7 Server Redundancy for setup of redundant OS servers.

For optimizing internal communication, connect the two stations of the redundant OS Single Station/OS Server pair to each other either via an RS 232 connecting cable or via an Ethernet cable, e.g. cross-over network cable with RJ45 connectors (up to 100 m). The cable material is to be ordered separately in each case:

Depending on the environmental conditions and the distance involved, the Ethernet connection between the two redundant stations can be implemented either as an electrical or optical connection. For more information, refer to the Manual "SIMATIC PCS 7 V8.2 high availability Process Control Systems"; for suitable cable material and further accessories, refer to Catalog IK PI (Industrial Communication).

What further components are required depends on the plant architecture. The design of the plant bus and terminal bus is of particular importance, as well as the type and number of subordinate automation systems. The maximum requirements are determined by the redundant configuration shown in the figure with a high availability automation system and two redundant rings each for the plant bus and terminal bus.

Design

The following table provides an overview of which components are required for a redundant OS single station or OS pair of servers depending on certain criteria:

Hardware and software components		Up to 8 AS per single station or server pair	9 to 64 AS per single station or server pair	Min. 1 redundant AS
SIMATIC PCS 7 Industrial Workstation, single station or server version, alternatives				
Including Ethernet network card 10/100/1000 Mbps and BCE		2	–	–
incl. CP 1613 A2/CP 1623/CP 1628 and SIMATIC NET HARDNET-IE S7		2 (alternative to BCE)	2	2
Software				
SIMATIC PCS 7 Single Station/Server Redundancy		1	1	1
SIMATIC NET HARDNET-IE S7-REDCONNECT PowerPack		–	–	2
Connection to redundant plant bus (2 rings), alternatives				
BCE	Desktop adapter network card	2	–	–
CP 1613 A2, CP 1623, CP 1628	Communication module	2 (alternative to BCE)	2	2
	SIMATIC NET HARDNET-IE S7	2 (alternative to BCE)	2	2
	SIMATIC NET HARDNET-IE S7 REDCONNECT	–	–	2
Connection to redundant terminal bus with PRP (2 rings)				
SOFTNET-IE RNA communication software		1 × per PCS 7 station on the terminal bus	1 × per PCS 7 station on the terminal bus	1 × per PCS 7 station on the terminal bus
Integration of non-PRP-enabled devices in redundant terminal bus with PRP				
SCALANCE X204RNA		1 × for 2 terminal devices	1 × for 2 terminal devices	1 × for 2 terminal devices

Design (continued)

Connection to plant bus

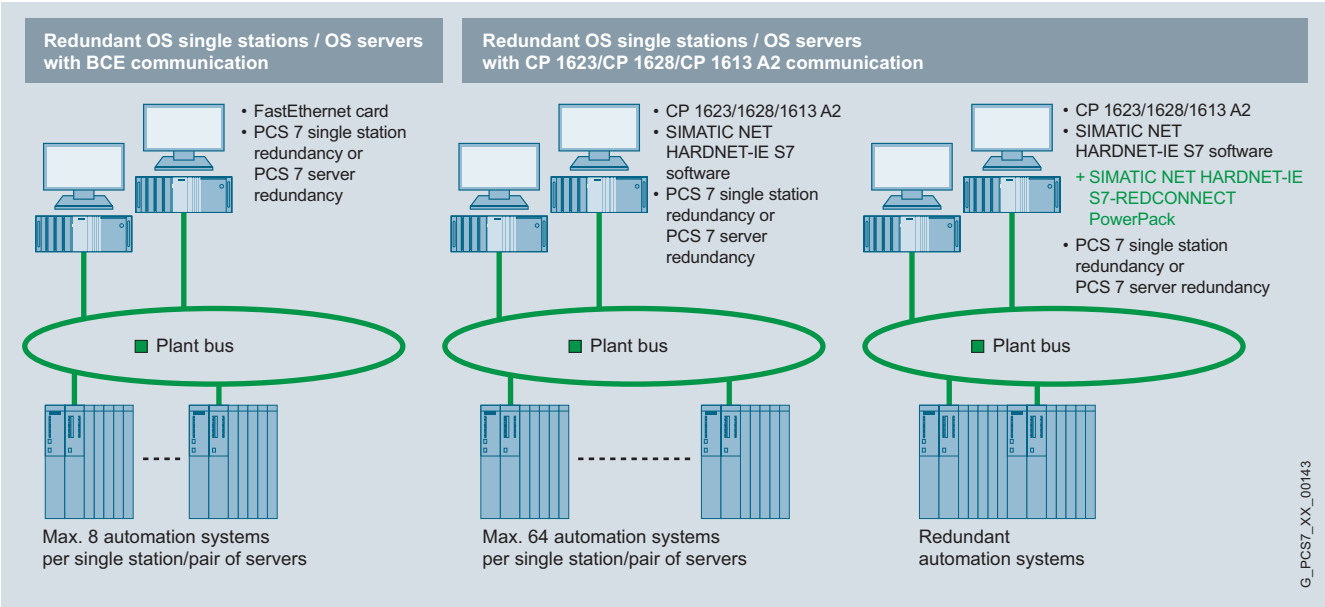

Components for connection of redundant OS single stations / OS servers on the plant bus

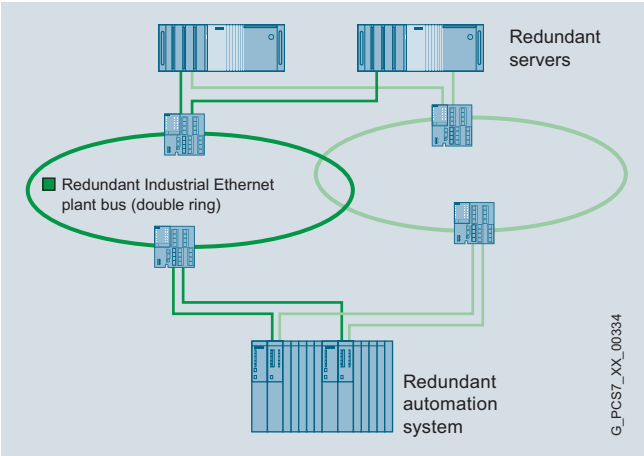

Redundant plant bus

The operator systems (single stations or servers) communicate with the automation systems via the Industrial Ethernet plant bus. The following special points must be observed for redundant configurations:

- BCE communication with the 10/100/1000 Mbps Ethernet card is generally sufficient even for redundant operator stations. Up to 8 automation systems can be connected per pair of servers (AS Single Stations only, not AS Redundancy Stations). The BCE license is included for the BCE versions of the SIMATIC PCS 7 Industrial Workstation. It is also valid for an additional desktop adapter network adapter.
- Industrial Ethernet communication via CP 1623 (preinstalled in the IE version of the SIMATIC PCS 7 Industrial Workstation) or alternatively CP 1628 (with extra security functions) and CP 1613 A2 (with conventional PCI interface) is required in the following cases:
  - The number of automation systems per OS is larger than 8.
  - Redundant automation systems (AS redundant stations) are used.
- The IE versions of the SIMATIC PCS 7 Industrial Workstation are equipped with a CP 1623 and SIMATIC NET HARDNET-IE S7 communication software, licensed for up to four CP 1623/CP 1628/CP 1613 A2 (license for 4 units). If subordinate automation systems (AS redundant stations) are to be connected, SIMATIC NET HARDNET-IE S7-REDCONNECT is required, however. The SIMATIC NET product HARDNET-IE S7REDCONNECT PowerPack (license for 4 units) can be used to upgrade features.
- If an operator station with BCE communication is to be upgraded for operation with redundant automation systems (AS redundancy stations), a CP 1623, CP 1628 or CP 1613 A2 communication module is required in addition to the SIMATIC NET HARDNET-IE S7-REDCONNECT (license for 4 units).
- If the plant bus is to be designed as a redundant dual ring, you require two interface modules (2 x Ethernet network cards 10/100/1000 Mbps or 2 x CP 1613 A2/CP 1623/CP 1628) per OS single station / OS server.

The communication software for CP 1623, CP 1628 or CP 1613 A2 is always supplied with the SIMATIC PCS 7 software and is installed based on the operating system.

In order to activate this communication software, you may need additional licenses for the

- SIMATIC NET HARDNET-IE S7,
- SIMATIC NET HARDNET-IE S7-REDCONNECT or
- SIMATIC NET HARDNET-IE S7 REDCONNECT PowerPack communication products.

Design (continued)

Connection to terminal bus

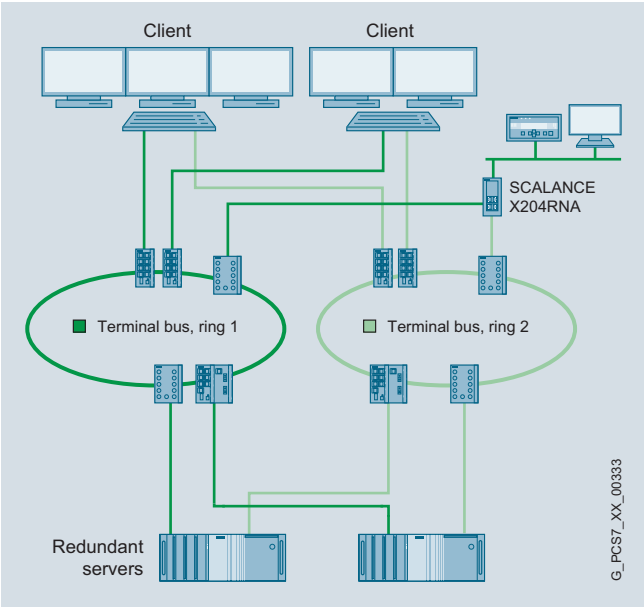

Redundant terminal bus

You can connect clients and servers to the terminal bus using integrated Industrial Ethernet interfaces or a desktop network adapter card.

A configuration with two separate rings is recommended for the redundant, high availability terminal bus. Communication is performed in this case using the Parallel Redundancy Protocol (PRP) in accordance with IEC 62439-3. Each PCS 7 station should be connected to one of two Industrial Ethernet interfaces on each of the two separate rings.

The SIMATIC NET SOFTNET-IE RNA communication software on the redundantly connected PCS 7 stations organizes communication processes based on the PRP. Therefore, SIMATIC NET SOFTNET-IE RNA communication software is required on each of the redundantly connected PCS 7 stations.

Connecting non-PRP-enabled devices

Up to 2 non-PRP-enabled devices that have only one Industrial Ethernet port, such as SICLOCK TC 400, a WLAN access point or an infrastructure computer, such as DNS, WINS, DHCP or a file server, can be integrated into a redundant, high availability terminal bus with PRP via a SCALANCE X204RNA.

Product versions of the SCALANCE X204RNA:

- SCALANCE X204RNA
  Router in plastic housing with 4 electrical ports for connecting up to two non-PRP-enabled terminal devices to redundant networks
- SCALANCE X204RNA EEC
  Router in metal housing with two electric terminal device ports and two optical/electrical combo ports for network connection of up to two non-PRP-enabled terminal devices to redundant networks

SCALANCE X-200RNA is typically installed with the stations to be connected in a control cabinet.

For information on configuration and accessories such as cable material, plug connectors and transceivers, see section Communication, Industrial Ethernet, System Connection PCS 7 Systems, page 10/47.

For more information and technical specifications for the two SCALANCE X204RNA product versions, see Catalog IK PI.

For details on redundant SIMATIC PCS 7 configurations, refer to the manual "High Availability Process Control Systems".

Subsequent conversions

It is common practice to retroactively change or expand a plant. The following SIMATIC PCS 7 OS Software ConversionPacks support both retrofitting of the redundancy functionality, as well as the conversion from redundant OS single stations to redundant OS servers:

- SIMATIC PCS 7 OS Software ConversionPack 2x Single Station to Single Station Redundancy
  for converting two OS Single Stations to OS Single Station Redundancy
- SIMATIC PCS 7 OS Software ConversionPack 2x Server to Server Redundancy for converting two OS Servers to OS Server Redundancy
- SIMATIC PCS 7 OS Software ConversionPack Single Station Redundancy to Server Redundancy for converting two redundant OS Single Stations from OS Single Station Redundancy to OS Server Redundancy

Ordering data

	Article No.
Setup of redundant OS Single Stations	
SIMATIC PCS 7 OS Software Single Station Redundancy V8.2 incl. 100 OS Runtime POs 5 languages (English, German, French, Italian, Spanish), software class A, runs with or Windows 7 Ultimate 32/64-bit or Windows 10 Enterprise 2015 LTSB 64-bit, single license for 2 installations	
With SIMATIC PCS 7 Software Media Package	
• Physical delivery License key on USB flash drive, certificate of license, bundled with 1 × SIMATIC PCS 7 Software Media Package per order item	**6ES7652-3AA28-2YA0**
• Online delivery License key download and online certificate of license, combined with SIMATIC PCS 7 Software Media Package (software download and online certificate of license) Note: E-mail address required!	**6ES7652-3AA28-2YH0**
SIMATIC PCS 7 OS Software Single Station Redundancy ASIA V8.2 incl. 100 OS Runtime POs 2 languages (English, Chinese), software class A, runs with Windows 7 Ultimate 32/64-bit or Windows 10 Enterprise 2015 LTSB 64-bit, single license for 2 installations	
Physical delivery 2 × ASIA license key on USB hardlock and certificate of license, bundled with 1 × SIMATIC PCS 7 Software Media Package ASIA per order item	
• ASIA	**6ES7652-3AA28-2CA0**
• SN ASIA (including SOFTNET REDCONNECT)	**6ES7652-3AA28-6CA0**
Design of redundant OS servers	
SIMATIC PCS 7 OS Software Server Redundancy V8.2, incl. 100 OS Runtime POs 5 languages (English, German, French, Italian, Spanish), software class A, runs with Windows Server 2008 R2 Standard 64-bit or Windows Server 2012 R2 Standard 64-bit; single license for 2 installations	
With SIMATIC PCS 7 Software Media Package	
• Physical delivery License key on USB flash drive, certificate of license, bundled with 1 × SIMATIC PCS 7 Software Media Package per order item	**6ES7652-3BA28-2YA0**
• Online delivery License key download and online certificate of license, combined with SIMATIC PCS 7 Software Media Package (software download and online certificate of license) Note: E-mail address required!	**6ES7652-3BA28-2YH0**

	Article No.
SIMATIC PCS 7 OS Software Server Redundancy ASIA V8.2, including 100 OS Runtime POs 2 languages (English, Chinese), software class A, runs with Windows Server 2008 R2 Standard 64-bit or Windows Server 2012 R2 Standard 64-bit, single license for 2 installations	
With SIMATIC PCS 7 Software Media Package ASIA	
Physical delivery 2 × ASIA license key on USB hardlock and certificate of license, bundled with 1 × SIMATIC PCS 7 Software Media Package ASIA per order item	
• ASIA	**6ES7652-3BA28-2CA0**
• SN ASIA (including SOFTNET REDCONNECT)	**6ES7652-3BA28-6CA0**
Volume licenses (quantity options)	
Runtime licenses for PO expansion for SIMATIC PCS 7 OS Single Station/ OS Server (cumulative); 2 required for each	
SIMATIC PCS 7 OS Runtime License For extending the OS Runtime POs, cumulative	
Language-neutral, software class A, single license for 1 installation	
No SIMATIC PCS 7 Software Media Package	
• Goods delivery License key on USB flash drive and certificate of license	
- 100 POs	**6ES7658-2XA00-0XB0**
- 1 000 POs	**6ES7658-2XB00-0XB0**
- 5 000 POs	**6ES7658-2XC00-0XB0**
• Online delivery License key download and online certificate of license Note: E-mail address required!	
- 100 POs	**6ES7658-2XA00-0XH0**
- 1 000 POs	**6ES7658-2XB00-0XH0**
- 5 000 POs	**6ES7658-2XC00-0XH0**
Expansion of integral high-performance circular buffer archive (512 tags) of OS single station and OS server; 2 licenses required for each	
SIMATIC PCS 7 OS Archive Cumulative archive licenses, independent of language, software class A, single license for 1 installation	
No SIMATIC PCS 7 Software Media Package	
• Goods delivery License key on USB flash drive and certificate of license	
- 1 500 tags	**6ES7658-2EA00-2YB0**
- 5 000 tags	**6ES7658-2EB00-2YB0**
- 10 000 tags	**6ES7658-2EC00-2YB0**
- 30 000 tags	**6ES7658-2ED00-2YB0**
• Online delivery License key download and online certificate of license Note: E-mail address required!	
- 1 500 tags	**6ES7658-2EA00-2YH0**
- 5 000 tags	**6ES7658-2EB00-2YH0**
- 10 000 tags	**6ES7658-2EC00-2YH0**
- 30 000 tags	**6ES7658-2ED00-2YH0**

Ordering data

	Article No.
Conversion of two OS single stations to redundant OS single stations	
SIMATIC PCS 7 OS Software ConversionPack 2x Single Station to Single Station Redundancy V8.2 For conversion of two OS single stations to OS single station redundancy Supports all languages of the OS Software Single Station, software class A, runs with Windows 7 Ultimate 32/64-bit or Windows 10 Enterprise 2015 LTSB 64-bit; single license for 2 installations No SIMATIC PCS 7 Software Media Package	
• Goods delivery License key on USB flash drive and certificate of license	**6ES7652-3AA28-2YD0**
• Online delivery License key download and online certificate of license Note: E-mail address required!	**6ES7652-3AA28-2YJ0**
Conversion of two redundant OS single stations to redundant OS servers	
SIMATIC PCS 7 OS Software ConversionPack Single Station Redundancy to Server Redundancy V8.2 For the conversion of two redundant OS single stations from OS single station redundancy to OS server redundancy Supports all languages of the OS Software Single Station Redundancy, software class A, runs with Windows Server 2008 R2 Standard 64-bit or Windows Server 2012 R2 Standard 64-bit, single license for 2 installations No SIMATIC PCS 7 Software Media Package	
• Goods delivery License key on USB flash drive and certificate of license	**6ES7652-3BA28-2YC0**
• Online delivery License key download and online certificate of license Note: E-mail address required!	**6ES7652-3BA28-1YJ0**

	Article No.
Conversion of two OS servers to redundant OS servers	
SIMATIC PCS 7 OS Software ConversionPack 2x Server to Server Redundancy V8.2 For the conversion of two OS servers to OS server redundancy Supports all languages of the OS Software Server, software class A, runs with Windows Server 2008 R2 Standard 64-bit or Windows Server 2012 R2 Standard 64-bit, single license for 2 installations No SIMATIC PCS 7 Software Media Package	
• Goods delivery License key on USB flash drive and certificate of license	**6ES7652-3BA28-2YD0**
• Online delivery License key download and online certificate of license Note: E-mail address required!	**6ES7652-3BA28-2YJ0**
Individual components	
RS 232 connecting cable, 10 m For redundant OS single stations / OS servers	**6ES7902-1AC00-0AA0**
Expansion components for OS single stations / OS servers For connection to redundant plant bus (BCE or CP 1613 A2/1623/1628), for upgrading from BCE to CP 1613 A2/1623/1628 including communication with redundant AS	
Desktop adapter network card for BCE and as spare part for redundant terminal bus INTEL PCI network adapter for connection to Industrial Ethernet (10/100/1000 Mbps), with RJ45 connection Note: License for the BCE communication with SIMATIC PCS 7 Industrial Workstations with BCE communication already included	
• With conventional PCI interface	**A5E00718412**
• With PCI Express interface	**A5E01579552**
CP 1613 A2 PCI card with one port (ITP or RJ45) for connecting to Industrial Ethernet (10/100 Mbps)	**6GK1161-3AA01**
CP 1623 PCI Express x1 card for connection to Industrial Ethernet (10/100/1000 Mbps), with 2-port switch (RJ45)	**6GK1162-3AA00**
CP 1628 PCI Express x1 card for connecting to Industrial Ethernet (10/100/1000 Mbps), with 2-port switch (RJ45) and integrated security functions (firewall, VPN)	**6GK1162-8AA00**

Ordering data

	Article No.
Licenses may be required for activating the functionality of the CP 1623, CP 1628 or CP 1613 A2 (Communications software is part of the SIMATIC PCS 7 software)	
Activation license if no redundant AS are used	
SIMATIC NET HARDNET-IE S7 V13 Runtime software, 2 languages (German/English), software class A	
License for up to 4 Industrial Ethernet CPs, single license for 1 installation	
No SIMATIC PCS 7 Software Media Package	
• Physical delivery Software and electronic manual on CD, license key on USB flash drive	**6GK1716-1CB13-0AA0**
• Online delivery Software and license key download Note: Email address required!	**6GK1716-1CB13-0AK0**
Activation licenses when using redundant AS	
Alternative license for SIMATIC NET HARDNET-IE S7:	
SIMATIC NET HARDNET-IE S7-REDCONNECT V13 Runtime software, 2 languages (English, German), software class A	
License for up to 4 Industrial Ethernet CPs, single license for 1 installation	
No SIMATIC PCS 7 Software Media Package	
• Physical delivery Software and electronic manual on CD, license key on USB flash drive	**6GK1716-0HB13-0AA0**
• Online delivery Software and license key download Note: Email address required!	**6GK1716-0HB13-0AK0**
Additive license for SIMATIC NET HARDNET-IE S7:	
SIMATIC NET HARDNET-IE S7-REDCONNECT PowerPack V13 Runtime software, 2 languages (English, German), software class A	
License for up to 4 Industrial Ethernet CPs, single license for 1 installation	
No SIMATIC PCS 7 Software Media Package	
• Physical delivery Software and electronic manual on CD, license key on USB flash drive	**6GK1716-0HB13-0AC0**
• Online delivery Software and license key download Note: Email address required!	**6GK1716-0HB13-0AK1**

	Article No.
Components for connecting SIMATIC PCS 7 stations to a redundant terminal bus with PRP protocol	
SOFTNET-IE RNA V13 Software for linking of SIMATIC PCS 7 stations to PRP-enabled networks with integrated SNMP	**6GK1711-1EW13-0AA0**
Runtime software, 2 languages (English, German), software class A, runs with Windows 7 Ultimate 32/64-bit, Windows Server 2008 R2 Standard 64-bit or Windows Server 2012 R2 Standard 64-bit, single license for 1 installation	
No SIMATIC PCS 7 Software Media Package	
Physical delivery Software and electronic manual on CD, license key on USB flash drive	
SCALANCE X-204RNA Industrial Ethernet routers With integrated SNMP access, Web diagnostics and PROFINET diagnostics, for connecting to non-PRP-enabled terminal devices on PRP networks, with operating instructions, Industrial Ethernet network manual and configuration software on CD	
• **SCALANCE X204RNA** with four 100 Mbps RJ45 ports	**6GK5204-0BA00-2KB2**
• **SCALANCE X204RNA EEC** with two 100 Mbps RJ45 ports and two RJ45/SFP combo ports	**6GK5204-0BS00-3LA3**
Accessories such as cable material, plug connectors and transceivers	See section Communication, Industrial Ethernet, System Connection PCS 7 Systems, page 10/47

For more information on the Software Media Package, see the section "Software Media and Logistics", "PCS 7 Software Packages", page 1/2.

More information

Regional product versions

see page 1/2.

Overview

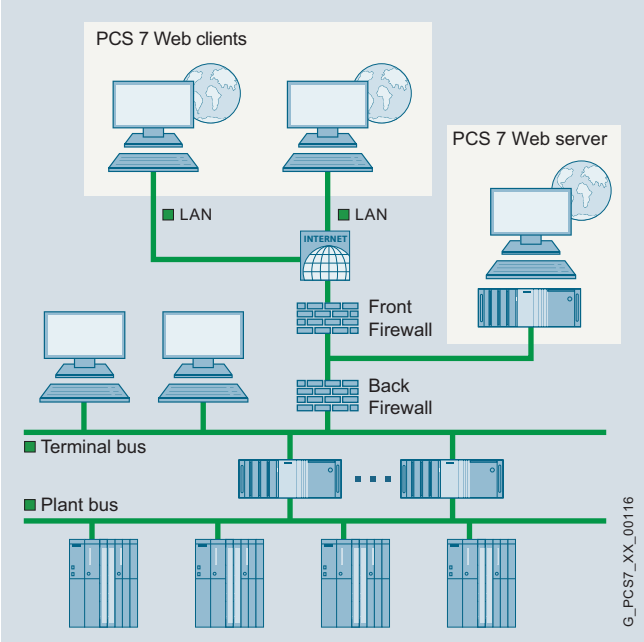

The PCS 7 Web server makes available the project data of the OS servers for PCS 7 Web clients and thus enables worldwide operator control and monitoring of a plant via intranet/Internet.

It does this by accessing project-specific process data in the lower-level OS servers using the mechanisms of a multi-client. The integrated OS user management guarantees a high degree of security here.

Application

A differentiation is basically made between the following types of application when operating and monitoring SIMATIC PCS 7 systems via the Web:

- Standard:
  Up to 50 PCS 7 web clients access the data of **one** PCS 7 web server over intranet/Internet.
- Diagnostics:
  One or only a few Web clients have access to **several** PCS 7 Web servers/single-user systems for remote operation, diagnostics or monitoring.

Function

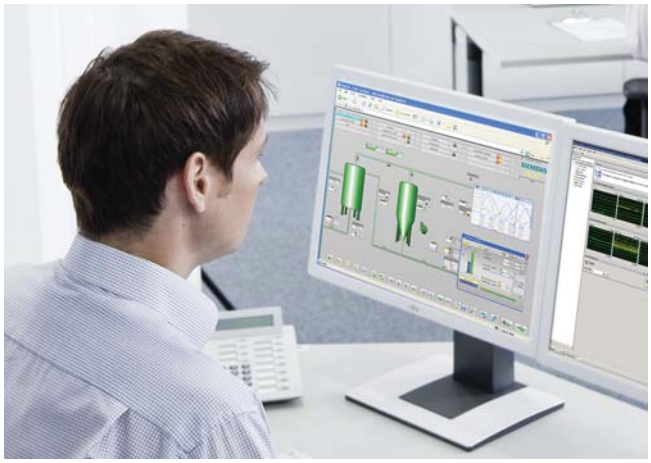

A plant can be operated and monitored via PCS 7 Web clients in the same manner as via the OS clients. SFC Visualization is supported in addition to the standard OS functions.

The process pictures are displayed on the PCS 7 Web clients with Internet Explorer. The PCS 7 Web clients access the project data provided by the PCS 7 Web server via an intranet or the Internet.

All web publishing contents of a SIMATIC PCS 7 project can be defined and managed in a central configuration dialog. This provides customized, project-specific setting options for each PCS 7 Web server. The configuration created with this dialog can be imMediately published or stored for later use. Trend displays can also be configured online.

The operator must log onto the PCS 7 Web client in the same way as for an OS client. The rules for assignment of rights are also identical. Operator actions on the PCS 7 Web client are recorded in the OS operator activities report. If the operator does not have write access on the PCS 7 Web client, a special customizable mouse pointer that cannot trigger an operator input is available to the operator for the display. The settings for this mouse pointer are retained following an upgrade.

Ordering data

	Article No.
"Standard" application	
SIMATIC PCS 7 Web Server Basic V8.2 6 languages (English, German, French, Italian, Spanish, Chinese), software class A, runs with Windows Server 2008 R2 Standard 64-bit or Windows Server 2012 R2 Standard 64-bit, single license for 1 installation	
No SIMATIC PCS 7 Software Media Package	
• Physical delivery License key on USB flash drive, certificate of license	**6ES7658-2GX28-2YB0**
• Online delivery License key download, online certificate of license Note: E-mail address required!	**6ES7658-2GX28-2YH0**
SIMATIC PCS 7 Web Server license (cumulative) Language-neutral, software class A, single license for 1 installation	
No SIMATIC PCS 7 Software Media Package	
• Physical delivery License key on USB flash drive, certificate of license	
- 1 client	**6ES7658-2GE00-0XB0**
- 5 clients	**6ES7658-2GF00-0XB0**
- 10 clients	**6ES7658-2GG00-0XB0**
• Online delivery License key download, online certificate of license Note: E-mail address required!	
- 1 client	**6ES7658-2GE00-0XH0**
- 5 clients	**6ES7658-2GF00-0XH0**
- 10 clients	**6ES7658-2GG00-0XH0**
"Diagnostics" application	
SIMATIC PCS 7 Web Diagnostics Server V8.2 6 languages (English, German, French, Italian, Spanish, Chinese), software class A, runs with Windows Server 2008 R2 Standard 64-bit or Windows Server 2012 R2 Standard 64-bit, single license for 1 installation	
No SIMATIC PCS 7 Software Media Package	
• Physical delivery License key on USB flash drive, certificate of license	**6ES7658-2HX28-2YB0**
• Online delivery License key download, online certificate of license Note: E-mail address required!	**6ES7658-2HX28-2YH0**
SIMATIC PCS 7 Web Diagnostics Client V8.2 6 languages (English, German, French, Italian, Spanish, Chinese), software class A, runs with or Windows 7 Ultimate 32/64-bit or Windows 10 Enterprise 2015 LTSB 64-bit, single license for 1 installation	
No SIMATIC PCS 7 Software Media Package	
• Physical delivery License key on USB flash drive, certificate of license	**6ES7658-2JX28-2YB0**
• Online delivery License key download, online certificate of license Note: E-mail address required!	**6ES7658-2JX28-2YH0**

	Article No.
Additive OS Software Client license for the "Standard" and "Diagnostics" applications (required on the PCS 7 Web Server in addition to SIMATIC PCS 7 Web Server license or SIMATIC PCS 7 Web Diagnostics Server license)	
SIMATIC PCS 7 OS Software Client V8.2[1)] 5 languages (English, German, French, Italian, Spanish), software class A, runs with Windows 7 Ultimate 32/64-bit or Windows 10 Enterprise 2015 LTSB 64-bit, floating license for 1 user	
No SIMATIC PCS 7 Software Media Package	
• Physical delivery License key on USB flash drive, certificate of license	**6ES7658-2CX28-0YB5**
• Online delivery License key download, online certificate of license Note: E-mail address required!	**6ES7658-2CX28-0YH5**
SIMATIC PCS 7 OS Software Client ASIA V8.2[1)] 2 languages (English, Chinese), software class A, runs with Windows 7 Ultimate 32/64-bit or Windows 10 Enterprise 2015 LTSB 64-bit, floating license for 1 user	
No SIMATIC PCS 7 Software Media Package ASIA	
• Physical delivery ASIA license key on USB hardlock, certificate of license	**6ES7658-2CX28-0CB5**

[1)] Contrary to the information in the ordering data, the OS Software Client license has also been approved in these special applications for the Windows Server 2008 R2 Standard 64-bit and Windows Server 2012 R2 Standard 64-bit operating systems.

More information

To ensure safe operation of the plant, you need to take suitable security measures that also include IT security (e.g. network segmentation). You can find more information on the topic of Industrial Security on the Internet at
www.siemens.com/industrialsecurity

Process data archiving and reporting

6

Overview

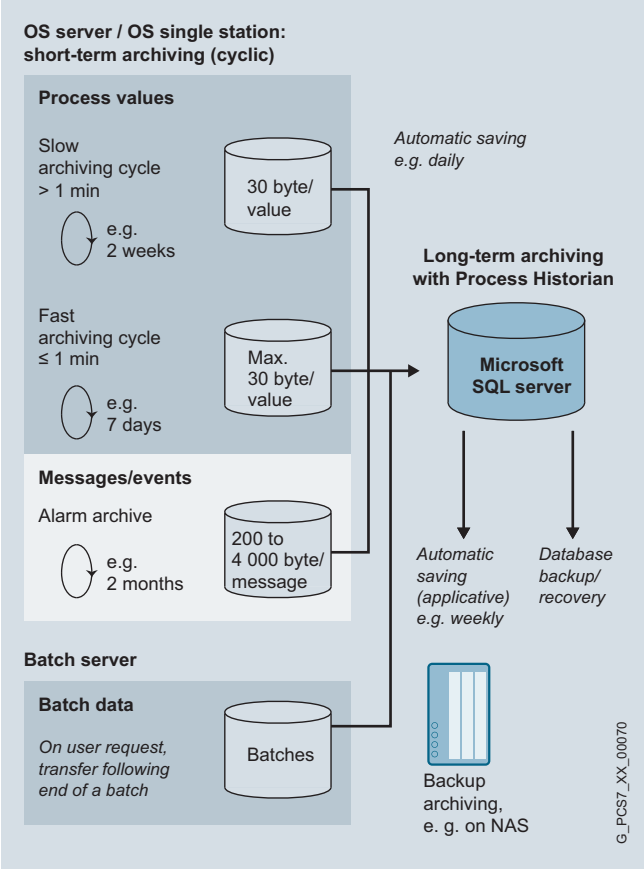

Short-term and long-term data archiving

The operator system already includes a high-performance archiving system based on Microsoft SQL Server with cyclic logs for short-term archiving of process values (typically 1 to 4 weeks) and messages/events (typically 2 months). Data from the cyclic logs and batch data from SIMATIC BATCH can be exported time-controlled or event-controlled to the Process Historian for permanent archiving.

The Process Historian can be expanded by an Information Server to work as a reporting system. The Information Server can access the archived data in the Process Historian and in the operator stations in parallel.

Data managed in the Process Historian can be backed up on external storage Media, such as an NAS (Network Attached Storage). This requires additional hardware and software that the utilized operating system supports.

Benefits

Process Historian

- Scalable high-performance archiving system in SIMATIC PCS 7
- No restriction with respect to single stations, servers or server pairs that can be archived
- Single or redundant configuration possible
- May be combined with Information Server for the generation of reports

Overview

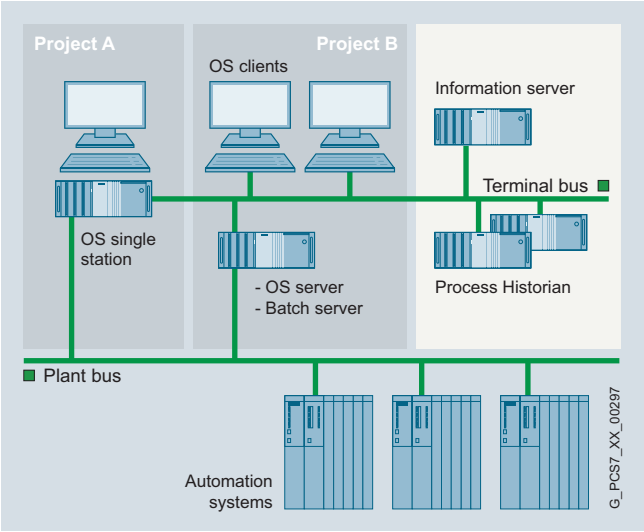

The Process Historian is used for long-term archiving of the following data from the SIMATIC PCS 7 process control system:

- OS archive data (process values and messages)
- Batch data

The process values and messages exported from the OS archives, as well as the batch data from SIMATIC BATCH are managed by the Process Historian in a central database. They can be visualized on OS clients or OS single stations either directly or with the support of the information server.

Design

The basic hardware for the Process Historian is the SIMATIC PCS 7 Industrial Workstation of type IPC847D, server version (see section "Industrial Workstation/IPC"). With larger quantity frameworks (more than 1 OS server in maximum archive configuration), the premium server from Catalog ST PCS 7 AO can be used, for example. Individual consultation on project-specific hardware configurations is recommended.

If high online availability is required, a redundant Process Historian can be configured with a server pair.

The Information Server can be installed and operated on the Process Historian hardware or on separate hardware. When the Process Historian is configured redundantly, the separation of the Information Server is mandatory. When the Information Server is separate, any OS client version of the SIMATIC PCS 7 Industrial Workstation is suitable (see section "Industrial Workstation/IPC").

The Process Historian and Information Server run with Windows Server 2008 R2 Standard 64-bit or Windows Server 2012 R2 Standard 64-bit operating system; the Information Server on separate hardware can also run with Windows 7 Ultimate 32/64-bit or Windows 10 Enterprise 2015 LTSB 64-bit.

The Process Historian and Information Server do not need a connection to the plant bus. They can be connected to the OS and batch servers of the SIMATIC PCS 7 system via terminal bus, e.g. via the integrated network connection (Ethernet RJ45 port onboard) of the server.

Configuration of the Process Historian

The licenses contained in the SIMATIC PCS 7 Process Historian Basic Package, SIMATIC PCS 7 Process Historian Server Redundancy or SIMATIC PCS 7 Process Historian and Information Server Basic Package are required for configuration of the Process Historian as the long-term archive of a SIMATIC PCS 7 system. These licenses must always be stored on the Process Historian server. The SIMATIC PCS 7 Process Historian Archive BATCH software product for archiving batch data from SIMATIC BATCH can be ordered optionally.

Configuration of applicative couplings with the Process Historian

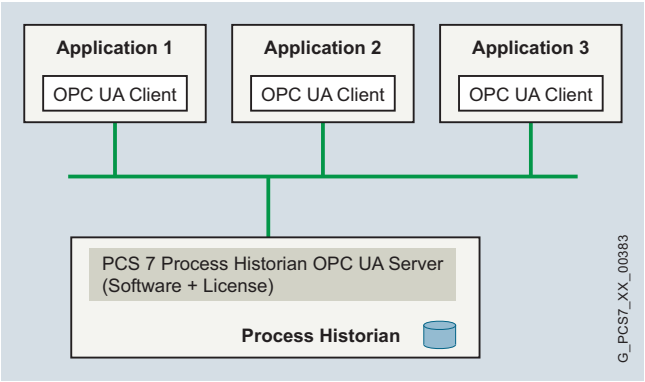

Reading of Process Historian data via OPC UA

As an OPC UA client, any applications can read the process values and messages archived in the database of the Process Historian. A SIMATIC PCS 7 Process Historian OPC UA Server is required for this on the Process Historian (software from SIMATIC PCS 7 Software Media Package plus single license for one installation).

Design (continued)

Configuration of the Information Server

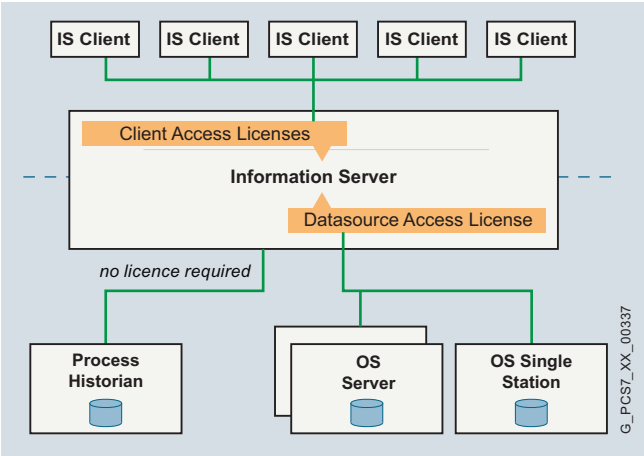

In addition to the SIMATIC PCS 7 Information Server Basic Package or the SIMATIC PCS 7 Process Historian and Information Server Basic Package, for configuration of the Information Server you require cumulative SIMATIC PCS 7 Information Server Client Access licenses corresponding to the number of clients that access the Information Server.

The Information Server is able to access one or multiple data sources in parallel. In addition to the Process Historian, this might also include archive data from operator stations (OS single station, OS server). In contrast to accessing the Process Historian, to read data from OS single stations and OS servers you need cumulative licenses for SIMATIC PCS 7 Information Server Data Source Access. The license volume depends on the number of sources.

The installation of the SIMATIC PCS 7 Information Server Client Access and Data Source Access licenses is performed on the Information Server.

Software products/licenses	Single Server			Server Redundancy
	Process Historian plus Information Server	Information Server	Process Historian	Process Historian
Basic hardware				
Premium Server or SIMATIC PCS 7 Industrial Workstation, OS Server version	1	–	1	2
SIMATIC PCS 7 Industrial Workstation, OS Client version	–	1	–	–
Software products/licenses				
SIMATIC PCS 7 Process Historian and Information Server Basic Package	1	–	–	–
SIMATIC PCS 7 Information Server Basic Package	–	1	–	–
SIMATIC PCS 7 Process Historian Basic Package	–	–	1	–
SIMATIC PCS 7 Process Historian Server Redundancy	–	–	–	1
SIMATIC PCS 7 Process Historian Archive BATCH	1	–	1	2
SIMATIC PCS 7 Process Historian OPC UA Server	1	–	1	2
Quantity options/volume licenses				
SIMATIC PCS 7 Information Server Client Access licenses, cumulative (sets of 1, 3, 5, 10)	Licenses for 1 server	Licenses for 1 server	–	–
SIMATIC PCS 7 Information Server Data Source Access, cumulative source licenses (sets of 1, 3)	Licenses for 1 server	Licenses for 1 server	–	–

Configuration options

The SIMATIC PCS 7 Process Historian Conversion Pack 2x Server to Server Redundancy enables you to convert two Process Historian (PH) servers with the Process Historian Basic Package to redundant PH servers with Process Historian redundancy.

Design (continued)

Conversion of Central Archive Server (CAS)

Change in product from CAS to Process Historian

A change in product from CAS to Process Historian is possible with products from the SIMATIC PCS 7 V8.0 range. In the separate catalog section "Previous versions", the following conversion packages are available under "SIMATIC PCS 7 V8.0, Process data archiving and reporting":

- SIMATIC PCS 7 CAS Conversion Pack "Single CAS Software V7.1+SP4/V8.0 to Process Historian Basic Package V8.0" for conversion of a single CAS to a corresponding Process Historian
- SIMATIC PCS 7 CAS Conversion Pack "Redundant CAS Software V7.1+SP4/V8.0 to Process Historian Server Redundancy V8.0" for conversion of a redundant CAS to a redundant Process Historian

The single or redundant Process Historian V8.0 can subsequently be upgraded to V8.2 (for further information, see "Update/upgrade packages, Upgrades from SIMATIC PCS 7 V8.0/V8.1 to V8.2, Upgrades for Process Historian and Information Server").

Migration of CAS database

The migration wizard of the Process Historian V8.2 supports the migration of CAS databases of SIMATIC PCS 7 V7.0 and higher.

Function

Process Historian

The Process Historian can archive process values, messages, and batch data from the SIMATIC PCS 7 process control system. It is configured in a SIMATIC PCS 7 project similar to other stations of the SIMATIC PCS 7 process control system (e.g. OS Server, Batch Server, Route Control Server, OpenPCS 7 Server or all clients).

The process values and messages managed in the database of the Process Historian on the OS clients and OS single stations can be visualized in a clear and comprehensible manner. Data selection is supported by integrated filter functions. Messages and process values can be shown in table form, and process values also in graphic form. Tables of process values can be exported in CSV format for further processing in other Windows applications, e.g. Microsoft Excel.

Any application can access the archived process values and messages in the Process Historian via OPC UA.

The data managed by Process Historian can be transferred to external storage Media (Backup/Restore). This requires additional hardware and software suitable for the operating system of the Process Historian, e.g. NAS (Network Attached storage).

The Process Historian also supports backup and restoring of the complete database – both manually and automatically.

Archiving and visualization functions

- Real-time archiving of process values and messages from SIMATIC PCS 7 operator systems (OS Single Stations and OS Servers)
- Archiving the batch data of SIMATIC BATCH
- Conversion of runtime segments in archive segments:
  - Loss-free data compression
  - Reduction of segment size in accordance with assignment and release of unused storage space
- Support of multiple SIMATIC PCS 7 projects
- Scaling relative to the basic hardware employed in terms of performance and quantity structure
- Export of all data as well as cataloging onto external storage Media
- Reading the swapped-out data and cataloging from external storage Media
- Data visualization on the OS clients/OS single stations:
  - Configuration of views (picture windows and masks) including the selection criteria for displaying the data
  - Visualizing of messages in table form dependent on filter functions
  - Displaying of process values in table or graphic form dependent on filter functions
  - Visualization of a batch overview (selecting the detailed log of a batch from the batch overview is possible)

Function (continued)

Information Server

The Information Server is the reporting system of the Process Historian. Based on the Microsoft Reporting Services, it offers web-based thin-client access to the historical data. Add-ins for Microsoft Word and Excel provide additional access to the database of the Process Historian.

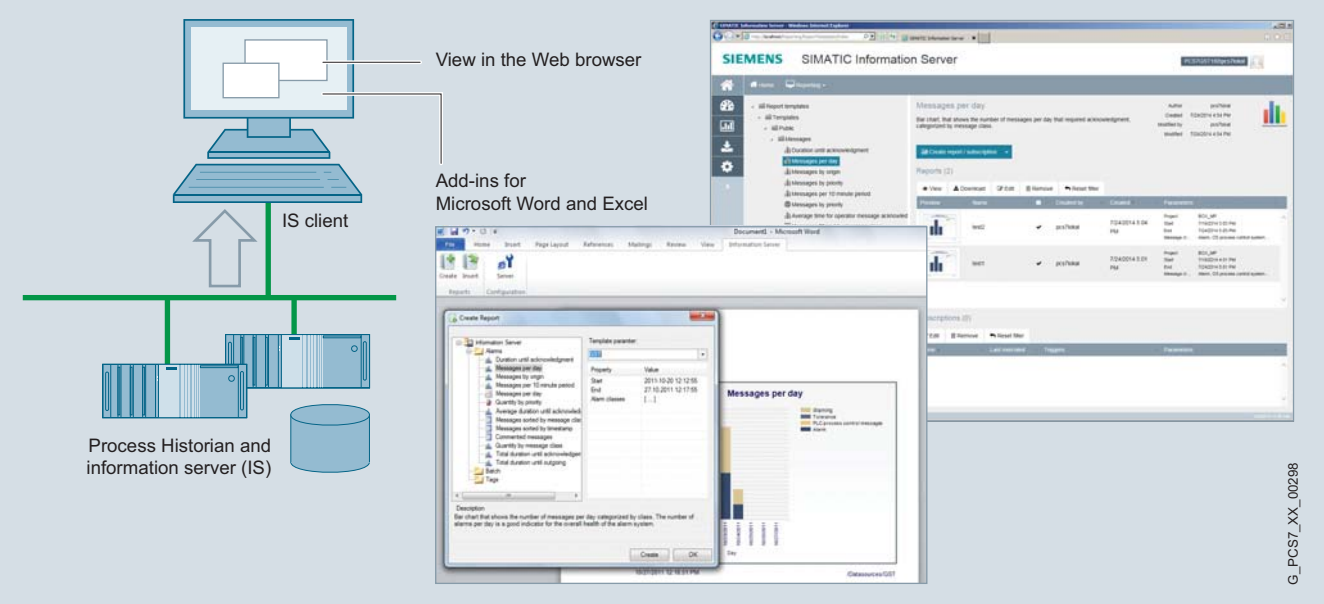

Reporting functions

- Frequently used report templates for process values, messages and batches
- Open reporting system for creating any number of new report templates
- Storage of configured (parameterized) report templates for faster access
- Report export in common document formats
- Support of subscriptions for cyclic report generation including email service
- Creation and storage of role-based dashboards
- Role management for Windows users; supports workgroups and Active Directory; user rights can be assigned for specific projects
- Generation of reports and inserting as graphics in Microsoft Office Word documents
- Creation of Microsoft Excel reports for historical process values and messages as well as storage of the Excel report templates on the Information Server
- Support of subscriptions for Microsoft Excel report templates

Ordering data

	Article No.
Process Historian and Information Server on shared hardware	
SIMATIC PCS 7 Process Historian and Information Server Basic Package V8.2 For the shared installation of Process Historian and Information Server on an Industrial Workstation 5 languages (English, German, French, Italian, Spanish), software class A, runs with Windows Server 2008 R2 Standard 64-bit or Windows Server 2012 R2 Standard 64-bit; single license for 1 installation No SIMATIC PCS 7 Software Media Package	
• Physical delivery License key on USB flash drive, certificate of license	**6ES7652-7AX28-2YB0**
• Online delivery License key download, online certificate of license Note: E-mail address required!	**6ES7652-7AX28-2YH0**
Process Historian and Information Server on separate hardware	
SIMATIC PCS 7 Information Server Basic Package V8.2 For installation of the Information Server on a single station or server version of the Industrial Workstation, separate from the Process Historian 5 languages (English, German, French, Italian, Spanish), software class A, runs with Windows 7 Ultimate 32/64-bit, Windows 10 Enterprise 2015 LTSB 64-bit, Windows Server 2008 R2 Standard 64-bit or Windows Server 2012 R2 Standard 64-bit, single license for 1 installation No SIMATIC PCS 7 Software Media Package	
• Physical delivery License key on USB flash drive, certificate of license	**6ES7652-7EX28-2YB0**
• Online delivery License key download, online certificate of license Note: E-mail address required!	**6ES7652-7EX28-2YH0**

	Article No.
SIMATIC PCS 7 Process Historian Basic Package V8.2 For installation of the Process Historian on a server version of the Industrial Workstation, separate from the Information Server 5 languages (English, German, French, Italian, Spanish), software class A, runs with Windows Server 2008 R2 Standard 64-bit or Windows Server 2012 R2 Standard 64-bit; single license for 1 installation No SIMATIC PCS 7 Software Media Package	
• Physical delivery License key on USB flash drive, certificate of license	**6ES7652-7BX28-2YB0**
• Online delivery License key download, online certificate of license Note: E-mail address required!	**6ES7652-7BX28-2YH0**
SIMATIC PCS 7 Process Historian Server Redundancy V8.2 For installation of a redundant Process Historian on server versions of two Industrial Workstations 5 languages (English, German, French, Italian, Spanish), software class A, runs with Windows Server 2008 R2 Standard 64-bit or Windows Server 2012 R2 Standard 64-bit; single license for 2 installations No SIMATIC PCS 7 Software Media Package	
• Physical delivery License key on USB flash drive, certificate of license	**6ES7652-7CX28-2YB0**
• Online delivery License key download, online certificate of license Note: E-mail address required!	**6ES7652-7CX28-2YH0**

Ordering data

	Article No.
Functional option for Process Historian	
SIMATIC PCS 7 Process Historian Archive BATCH V8.2 5 languages (English, German, French, Italian, Spanish), software class A, runs with Windows Server 2008 R2 Standard 64-bit or Windows Server 2012 R2 Standard 64-bit; single license for 1 installation	
No SIMATIC PCS 7 Software Media Package	
• Physical delivery License key on USB flash drive, certificate of license	**6ES7652-7DX28-2YB0**
• Online delivery License key download, online certificate of license Note: E-mail address required!	**6ES7652-7DX28-2YH0**
SIMATIC PCS 7 Process Historian OPC UA Server V8.2 for connection to third-party system	
5 languages (English, German, French, Italian, Spanish), software class A, runs with Windows Server 2008 R2 Standard 64-bit or Windows Server 2012 R2 Standard 64-bit; single license for 1 installation	
No SIMATIC PCS 7 Software Media Package	
• Physical delivery License key on USB flash drive, certificate of license	**6ES7652-7FX28-2YB0**
• Online delivery License key download, online certificate of license Note: E-mail address required!	**6ES7652-7FX28-2YH0**

	Article No.
Quantity options for Information Server	
SIMATIC PCS 7 Information Server Client Access Cumulative Client Access licenses, independent of language, software class A, single license for 1 installation	
No SIMATIC PCS 7 Software Media Package	
• Physical delivery License key on USB flash drive, certificate of license	
- 1 client	**6ES7652-7YA00-2YB0**
- 3 clients	**6ES7652-7YB00-2YB0**
- 5 clients	**6ES7652-7YC00-2YB0**
- 10 clients	**6ES7652-7YD00-2YB0**
• Online delivery License key download, online certificate of license Note: E-mail address required!	
- 1 client	**6ES7652-7YA00-2YH0**
- 3 clients	**6ES7652-7YB00-2YH0**
- 5 clients	**6ES7652-7YC00-2YH0**
- 10 clients	**6ES7652-7YD00-2YH0**
SIMATIC PCS 7 Information Server Data Source Access License for direct access to the archive data of operator stations (sources)	
Cumulative source licenses, independent of language, software class A, single license for 1 installation	
No SIMATIC PCS 7 Software Media Package	
• Physical delivery License key on USB flash drive, certificate of license	
- 1 source	**6ES7652-7YE00-2YB0**
- 3 sources	**6ES7652-7YF00-2YB0**
• Online delivery License key download, online certificate of license Note: E-mail address required!	
- 1 source	**6ES7652-7YE00-2YH0**
- 3 sources	**6ES7652-7YF00-2YH0**
Conversion of two Process Historian servers to redundant Process Historian servers	
SIMATIC PCS 7 Process Historian Conversion Pack 2x Server to Server Redundancy V8.2 For conversion of two Process Historian (PH) servers with Process Historian Basic Package to redundant PH servers with Process Historian Redundancy	
5 languages (English, German, French, Italian, Spanish), software class A, runs with Windows Server 2008 R2 Standard 64-bit or Windows Server 2012 R2 Standard 64-bit; single license for 2 installations	
No SIMATIC PCS 7 Software Media Package	
• Physical delivery License key on USB flash drive, certificate of license	**6ES7652-7CX28-2YD0**
• Online delivery License key download, online certificate of license Note: E-mail address required!	**6ES7652-7CX28-2YJ0**

Plant Device Management

Overview

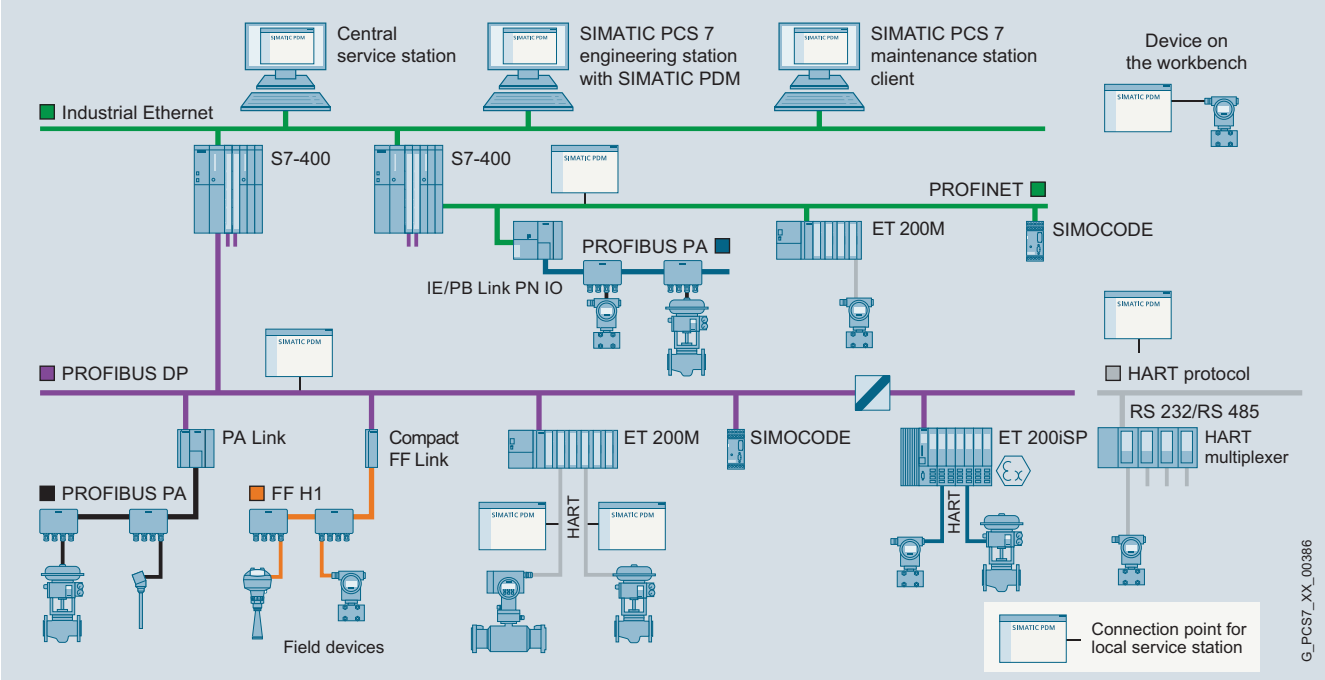

Configuration options with SIMATIC PDM

SIMATIC PDM (Process Device Manager) is a universal, vendor-independent tool for the configuration, parameter assignment, commissioning, diagnostics and servicing of intelligent field devices (sensors and actuators) and field components (remote I/Os, multiplexers, control-room devices, compact controllers), which in the following sections will be referred to simply as devices.

With *one* software product, SIMATIC PDM enables users to work with over 3 500 devices and device variants of Siemens and over 200 other manufacturers worldwide on a *single* homogeneous user interface.

The user interface satisfies the requirements of the VDI/VDE GMA 2187 and IEC 65/349/CD directives. Parameters and functions for all supported devices are displayed in a consistent and uniform fashion independent of their communications interface. Even complex devices with several hundred parameters can be represented clearly and processed quickly. Using SIMATIC PDM it is very easy to navigate in highly complex stations such as remote I/Os and even connected field devices.

From the viewpoint of device integration, SIMATIC PDM is the most powerful open process device manager on the global market. Devices which previously were not supported can be integrated in SIMATIC PDM by importing their device descriptions (EDD). This provides security for your investment and saves you investment costs, training expenses and follow-up costs.

SIMATIC PDM supports the operative system management in particular through:

- Uniform presentation and operation of devices
- Uniform representation of diagnostics information
- Indicators for preventive maintenance and servicing
- Detection of changes in the project and device
- Increasing the operational reliability
- Reducing the investment, operating and maintenance costs

Maintenance personnel can assign field device parameters using Microsoft Internet Explorer at mobile and stationary workstations with SIMATIC PDM. Practically every workstation integrated in the production plant can be used for configuration. Service personnel are thus able to work directly at the location of the field device, while data is stored centrally in the engineering station or maintenance station. This leads to a significant shortening of maintenance and travel times.

When a maintenance station is configured in the SIMATIC PCS 7 process control system, SIMATIC PDM is integrated in it and transmits parameter data and diagnostic information. You can switch directly to the SIMATIC PDM views from the diagnostics faceplates in the maintenance station.

A SIMATIC PDM user administration system based on SIMATIC Logon is used to assign various roles with defined function privileges to users. These function privileges refer to SIMATIC PDM system functions, e.g. writing to the device.

For all devices described per Electronic Device Description (EDD), SIMATIC PDM delivers a range of information for display and further processing on the maintenance station, e.g.:

- Device type information (electronic rating plate)
- Detailed diagnostics information (manufacturer information, information on error diagnostics and troubleshooting, further documentation)
- Results of internal condition monitoring functions
- Status information (e.g. local configuration changes)
- Information on changes (audit trail report)
- Parameter information

Application

Many years of real-world use have yielded the following main use cases for SIMATIC PDM:

- Single Point Station
  - For handling a single field device
  - Direct connection to the device
- Local service and parameter assignment station
  - For handling multiple field devices on the fieldbus segment or remote I/O station
  - Connection to the local bus segment
- Central service and parameter assignment station
  - For centralized handling of field devices or a production plant
  - Connection on the plant bus
  - Access to field devices via the SIMATIC automation systems;
  - Can be used multiple times within an automation project, e.g. as service and parameter assignment stations for various plant units
  - Information on the fieldbuses and connected field devices can be transferred from the engineering station.
- HART service and parameter assignment station
  - For processing HART field devices
  - Connection to the local HART multiplexer networks or the Ethernet networks of the "Wireless HART Gateways"
- Field device configuration on the SIMATIC PCS 7 engineering station
  - For handling field devices in the hardware configurator of the PCS 7 engineering station or locally at the field device via a mobile SIMATIC PDM client
  - Data storage on the PCS 7 engineering station
  - Using the communication paths of the engineering station
- Field device configuration and servicing on the SIMATIC PCS 7 maintenance station
  - For field device management during the operating phase of the automation plant
  - Field device handling via the operator stations of the PCS 7 maintenance station or via a mobile SIMATIC PDM client locally on the field device
  - SIMATIC PDM supplies the PCS 7 maintenance station with information on the field device type, parameter assignment and diagnostics.

Components	**Product packages**							
	SIMATIC PDM Stand alone				SIMATIC PDM system-integrated			
	Minimum configuration	Basic configuration	Service and parameter assignment station		in the configuration environment			
			local	central	SIMATIC S7	SIMATIC PCS 7		
	PDM Single Point	**PDM Basic**	**PDM Service**	**PDM Stand alone Server**	**PDM S7**	**PDM PCS 7**	**PDM PCS 7 Server**	**PDM PCS 7 FF**
SIMATIC PDM TAGs[1] in product package	1	4	4 + 50	4 + 100	4 + 100	4 + 100	4 + 100	4 + 100
SIMATIC PDM expansion options								
Count Relevant Licenses (accumulative) - 10 TAGs - 100 TAGs - 1 000 TAGs	*cannot be expanded*	o	o	o	o	o	o	o
SIMATIC PDM Basic		●	●	●	●	●	●	●
SIMATIC PDM Extended		o	o	●	●	●	●	●
SIMATIC PDM integration in STEP 7/PCS 7		o	o	o	●	●	●	●
SIMATIC PDM Routing[2]		o	o	o	o	●	●	●
SIMATIC PDM Server		o	o	●	o	o	●	o
SIMATIC PDM 1 Client[3]		o	o	● (2 ×)	o	o	o	o
SIMATIC PDM Communication FOUNDATION Fieldbus		o	o	o	o	o	o	●
SIMATIC PDM HART server		o	o	o	o	–	–	–

SIMATIC PDM product structure

● Product component is part of the product package
o Optional product component for the product package; order additive
– Product component is not relevant for the product package or not available

[1] For TAG definition, see "Design" section under "SIMATIC PDM TAGs"

[2] In combination with SIMATIC PDM Integration in STEP 7/PCS 7

[3] In combination with SIMATIC PDM Server

Application (continued)

Customer-oriented product structure

The customer-oriented product structure of SIMATIC PDM provides optimal support for the named main use cases and enables you to adapt the scope of functions and performance to your individual requirements. The product range is organized as follows:

SIMATIC PDM Stand alone product packages

- SIMATIC PDM Single Point, a minimum configuration for single device handling
- SIMATIC PDM Basic for local service and parameter assignment stations as well as basic configuration for individual product package with optional product components
- SIMATIC PDM Service for local service and parameter assignment stations
- SIMATIC PDM Stand alone Server for central service and parameter assignment stations, e.g. for various plant units

SIMATIC PDM system-integrated product packages

- SIMATIC PDM S7 for local SIMATIC S7 engineering and service stations
- Various configurations for central SIMATIC PCS 7 engineering and service stations:
  - SIMATIC PDM PCS 7
  - SIMATIC PDM PCS 7 Server (enables device parameter assignment and diagnostics on clients of the PCS 7 engineering station and PCS 7 Maintenance Station)
  - SIMATIC PDM PCS 7-FF (supports the FOUNDATION Fieldbus H1)

In some circumstances, the product packages can be expanded with optional product components (for details, see the Design section, page 7/5).

Selection criteria

In addition to considering the environment of use and the functional and performance features when selecting the product (see table in "Design" section, page 7/5), also observe the system requirements (see "Technical specifications" section, page 7/9).

Design

Product range	SIMATIC PDM V9.0							
	Single Point	Basic	Service	Stand alone Server	S7	PCS 7	PCS 7 Server	PCS 7-FF
TAGs contained	1	4	4 + 50	4 + 100	4 + 100	4 + 100	4 + 100	4 + 100
Project: Create offline	●	●	●	●	●	●	●	●
Project: Usable TAG extensions	–	●	●	●	●	●	●	●
Project: Process device network view	●	●	●	●	●	●	●	●
Project: Process device plant view	●	●	●	●	●	●	●	●
Project: Export/import devices	–	–	●	●	–	–	–	–
Project: Export/import parameters	–	o	●	●	●	●	●	●
Project: HW Config	–	o	o	o	●	●	●	●
Project: Utilization of SIMATIC PDM options	–	●	●	●	●	●	●	●
Project: Integration in STEP 7/PCS 7	–	o	o	o	●	●	●	●
Communication: HART modem	●	●	●	●	●	–	–	–
Communication: HART interface	●	●	●	●	●	–	–	–
Communication: PROFIBUS DP/PA	●	●	●	●	●	●	●	●
Communication: HART over PROFIBUS DP	●	●	●	●	●	●	●	●
Communication: FF H1	–	o[1]	o[1]	o[1]	o	o	o	●
Communication: Modbus	●	●	●	●	●	●	●	●
Communication: Ethernet	●	●	●	●	●	●	●	●
Communication: PROFINET	●	●	●	●	●	●	●	●
Communication: HART over PROFINET	●	●	●	●	●	●	●	●
Devices: Export/import parameters	–	o	o	●	●	●	●	●
Devices: Comparison of parameter values	–	o	o	●	●	●	●	●
Devices: Saving parameters	●	●	●	●	●	●	●	●
Devices: Change log (Audit Trail)	–	o	o	●	●	●	●	●
Devices: Calibration report	–	o	o	●	●	●	●	●
Devices: Print function	●	o	o	●	●	●	●	●
Devices: Document manager	–	o	o	●	●	●	●	●
Lifelist: Basic functionality	●	●	●	●	●	●	●	●
Lifelist: Expanded functionality (scan range, diagnostics, export, addressing)	–	o	o	●	●	●	●	●
Communication: Data record routing	–	o	o	o	o	●	●	●
Communication: HART multiplexer	–	o	o	o	o	–	–	–
Communication: Wireless HART	–	o	o	o	o	–	–	–
Function: HART SHC mode (increased communication speed)	●	●	●	●	●	●	●	●
Function: Device parameterization on PCS 7 maintenance station clients	–	o	o	o	o	o	●	o
Function: Device parameter assignment on SIMATIC PDM clients	–	o	o	● (2 ×)	o	o	o	o

SIMATIC PDM overview of functions and features

● Product component is part of the product package
o Optional product component for the product package; order additive
– Product component is not relevant for the product package or not available

[1] Not in Stand alone mode

Design (continued)

SIMATIC PDM Stand alone product packages

SIMATIC PDM Single Point V9.0

This minimum configuration with handheld functionality is intended for handling exactly *one* field device via point-to-point coupling. It cannot be expanded with functions or with SIMATIC PDM TAG or SIMATIC PDM 1 Client licenses. Upgrading to a different product variant, e.g. SIMATIC PDM Basic, or a different product version is also not possible.

Supported communication types:

- PROFIBUS DP/PA
- HART communication (modem, RS 232 and via PROFIBUS/PROFINET)
- Modbus
- Ethernet
- PROFINET

The functionality is matched accordingly. The device functions are supported as defined in the device description, for example:

- Managing the device library and unlimited device selection
- Parameter assignment and diagnostics according to the device description
- Exporting and importing of parameter data
- Device identification
- Lifelist
- Printing the parameter list

SIMATIC PDM Basic V9.0

SIMATIC PDM Basic is for local service and parameter assignment stations on any computers (IPC/notebook) with local connection to bus segments or direct connection to the device.

Supported communication types:

- PROFIBUS DP/PA
- HART communication (modem, RS 232 and via PROFIBUS/PROFINET)
- Modbus
- Ethernet
- PROFINET

SIMATIC PDM Basic is equipped with all basic functions required for operation and parameter assignment of devices. That is, compared to SIMATIC PDM Single Point, it has the following additional functions:

- EDD-based diagnostics in the lifelist
- Memory function (only exporting and importing of parameter data)
- Report function
- Communication with HART field devices via remote I/Os

As a basic block for an individual configuration, SIMATIC PDM Basic can be expanded with all functional SIMATIC PDM options (PDM Routing only in combination with PDM Integration in STEP 7/PCS 7 required) as well as with cumulative sets of 10, 100 or 1 000 SIMATIC PDM TAGs. Without TAG expansion, SIMATIC PDM Basic is suitable for projects with up to 4 TAGs. SIMATIC PDM 1 Client licenses (sets of 1) can also be added in combination with the SIMATIC PDM Server option.

The SIMATIC PDM Extended option allows activation of additional SIMATIC PDM system functions (for details, see SIMATIC PDM Extended V9.0 under "Optional product components", page 7/7).

SIMATIC PDM Service V9.0

With this product package for extended service, local service and parameter assignment stations can be realized on any type of computer (IPC/notebook) with a local connection to a bus segment or direct connection to field devices.

It comprises:

- SIMATIC PDM Basic (incl. 4 SIMATIC PDM TAGs)
- 50 SIMATIC PDM TAGs

Like SIMATIC PDM Basic, SIMATIC PDM Service can be expanded with all functional SIMATIC PDM options (PDM Routing only in combination with PDM Integration in STEP 7/PCS 7 required) as well as with cumulative SIMATIC PDM TAGs (sets of 10, 100 or 1 000) (see "Optional product components", page 7/7). SIMATIC PDM 1 Client licenses (sets of 1) can also be added in combination with the SIMATIC PDM Server option. It is permitted to upgrade to another product version.

Note: For use of gateways and for PROFINET or Ethernet communication with field devices, SIMATIC PDM TAG licenses are charged for according to the objects configured in the process device plant view as follows:

- 10 SIMATIC PDM TAGs per S7 DSGW (data record gateway) with one PROFIBUS subnet
- 20 SIMATIC PDM TAGs per S7 DSGW with more than one PROFIBUS subnet
- 10 TAGs per IE/PB Link
- 1 TAG per field device (except in the case of special specifications)

SIMATIC PDM Stand alone Server V9.0

With the SIMATIC PDM Stand alone Server product package, you can establish central service and parameter assignment stations that operate according to the client/server principle. Portals opened on licensed SIMATIC PDM clients (SIMATIC PDM sessions) enable handling of production plant field devices via the SIMATIC PDM server on the plant bus assigned via registration. The product package can be used multiple times within a plant, e.g. for various plant units. It comprises:

- SIMATIC PDM Basic (incl. 4 SIMATIC PDM TAGs)
- SIMATIC PDM Extended
- SIMATIC PDM Server
- 2 × SIMATIC PDM 1 Client
- 100 SIMATIC PDM TAGs

SIMATIC PDM Stand alone Server can be expanded with all functional SIMATIC PDM options (PDM Routing only in combination with PDM Integration in STEP 7/PCS 7 required) as well as with cumulative sets of 10, 100 or 1 000 SIMATIC PDM TAGs and SIMATIC PDM 1-client licenses (see "Optional product components", page 7/7). The portals opened on these clients (SIMATIC PDM sessions) must also be licensed with the SIMATIC PDM 1-client licenses (besides the SIMATIC PDM clients). For details about this, refer to "SIMATIC PDM 1 Client" under "Optional product components", page 7/8. For user management of the SIMATIC PDM clients, the SIMATIC Logon product is also required. It is possible to upgrade to another product version.

Note: For use of gateways and for PROFINET or Ethernet communication with field devices, SIMATIC PDM TAG licenses are charged for according to the objects configured in the process device plant view (for details, see corresponding note under SIMATIC PDM Service V9.0, page 7/6).

Design (continued)

SIMATIC PDM system-integrated product packages

SIMATIC PDM S7 V9.0

The SIMATIC PDM S7 product package designed for use in a SIMATIC S7 configuration environment is intended for setup of a local SIMATIC S7 engineering and service station. It requires the installation of STEP 7 V5.5+SP4. It includes:

- SIMATIC PDM Basic (incl. 4 SIMATIC PDM TAGs)
- SIMATIC PDM Extended
- SIMATIC PDM integration in STEP 7/PCS 7
- 100 SIMATIC PDM TAGs

SIMATIC PDM S7 can be expanded with the functional options SIMATIC PDM Routing, SIMATIC PDM Communication FOUNDATION Fieldbus, SIMATIC PDM Server, and SIMATIC PDM HART Server as well as with cumulative SIMATIC PDM TAGs (sets of 10, 100 or 1 000) (see "Optional product components", page 7/7). SIMATIC PDM 1 Client licenses (sets of 1) can also be added in combination with the SIMATIC PDM Server option.

SIMATIC PDM PCS 7 V9.0

The SIMATIC PDM PCS 7 product package suitable for use in a SIMATIC PCS 7 configuration environment is intended for use in a central SIMATIC PCS 7 engineering and service station. It comprises:

- SIMATIC PDM Basic (incl. 4 SIMATIC PDM TAGs)
- SIMATIC PDM Extended
- SIMATIC PDM integration in STEP 7/PCS 7
- SIMATIC PDM Routing
- 100 SIMATIC PDM TAGs

SIMATIC PDM PCS 7 can be expanded with the functional options SIMATIC PDM Communication FOUNDATION Fieldbus and SIMATIC PDM Server as well as with cumulative SIMATIC PDM TAGs (sets of 10, 100 or 1 000) (see "Optional product components", page 7/7). SIMATIC PDM 1 Client licenses (sets of 1) can also be added in combination with the SIMATIC PDM Server option.

SIMATIC PDM PCS 7 Server V9.0

Instead of SIMATIC PDM PCS 7, the SIMATIC PDM PCS 7 Server product package expanded with the SIMATIC PDM Server option can also be used for a central SIMATIC PCS 7 engineering and service station. Field devices integrated using an Electronic Device Description (EDD) can then be assigned parameters on any client of the SIMATIC PCS 7 Maintenance Station as well as on local SIMATIC PDM clients. The following are components of SIMATIC PDM PCS 7 Server:

- SIMATIC PDM Basic (incl. 4 SIMATIC PDM TAGs)
- SIMATIC PDM Extended
- SIMATIC PDM integration in STEP 7/PCS 7
- SIMATIC PDM Routing
- SIMATIC PDM Server
- 100 SIMATIC PDM TAGs

SIMATIC PDM PCS 7 Server can be expanded with the functional option SIMATIC PDM Communication FOUNDATION Fieldbus as well as with cumulative sets of 10, 100 or 1 000 SIMATIC PDM TAGs and SIMATIC PDM 1-Client licenses (see "Optional product components"), page 7/7. The portals opened on these clients (SIMATIC PDM sessions) must also be licensed with the SIMATIC PDM 1-client licenses (besides the SIMATIC PDM clients). For details about this, refer to "SIMATIC PDM 1 Client" under "Optional product components", page 7/8.

SIMATIC PDM PCS 7-FF V9.0

Instead of SIMATIC PDM PCS 7, the SIMATIC PDM PCS 7-FF product package expanded with the SIMATIC PDM Communication FOUNDATION Fieldbus option can also be used for a central SIMATIC PCS 7 engineering and service station. This additionally supports parameter assignment of field devices on FOUNDATION Fieldbus H1. Components of SIMATIC PDM PCS 7-FF are:

- SIMATIC PDM Basic (incl. 4 SIMATIC PDM TAGs)
- SIMATIC PDM Extended
- SIMATIC PDM integration in STEP 7/PCS 7
- SIMATIC PDM Routing
- SIMATIC PDM Communication FOUNDATION Fieldbus
- 100 SIMATIC PDM TAGs

SIMATIC PDM PCS 7-FF V9.0 can be expanded with the functional option SIMATIC PDM Server as well as with cumulative sets of 10, 100 or 1 000 SIMATIC PDM TAGs (see "Optional product components", page 7/7). SIMATIC PDM 1 Client licenses (sets of 1) can also be added in combination with the SIMATIC PDM Server option.

Optional product components

Option SIMATIC PDM Extended V9.0

The SIMATIC PDM Extended option enables you to unlock other system functions for SIMATIC PDM Basic and SIMATIC PDM, for example:

- Change log
- Calibration report
- Extended information in the Lifelist
- Export and import functions
- Print functions
- Document manager
- Comparison function

This functionality is already integrated in the following product packages: SIMATIC PDM Stand alone Server, SIMATIC PDM S7, SIMATIC PDM PCS 7, SIMATIC PDM PCS 7 Server and SIMATIC PDM PCS 7-FF.

Option SIMATIC PDM Integration in STEP 7/PCS 7 V9.0

This option is used for the integration of SIMATIC PDM in a SIMATIC S7 or SIMATIC PCS 7 configuration environment. SIMATIC PDM can then be started directly from the hardware configurator (HW Config) in STEP 7/SIMATIC PCS 7.

This functionality is already integrated in the product packages of category "SIMATIC PDM system-integrated" (SIMATIC PDM S7, SIMATIC PDM PCS 7, SIMATIC PDM PCS 7 Server, and SIMATIC PDM PCS 7-FF).

Design (continued)

Option SIMATIC PDM Routing V9.0

If SIMATIC PDM is used on an engineering station, the SIMATIC PDM Routing option enables handling of every device in the field that can be configured per EDD throughout the plant and across different bus systems and remote I/Os. SIMATIC PDM Routing can be used in combination with SIMATIC PDM Integration in STEP 7/SIMATIC PCS 7.

Routing is already integrated in SIMATIC PDM PCS 7, SIMATIC PDM PCS 7 Server, and SIMATIC PDM PCS 7-FF. SIMATIC PDM Routing can be additionally installed as an option on a local SIMATIC S7 engineering and service station with SIMATIC PDM S7.

Option SIMATIC PDM Server V9.0

The server functionality can be activated in a local or central service station with this option. It enables parameter assignment of selected field devices on any client of the SIMATIC PCS 7 Maintenance Station as well as on local SIMATIC PDM clients. This functionality is already integrated in the SIMATIC PDM Stand alone Server and SIMATIC PDM PCS 7 Server. The SIMATIC PDM clients as well as the portals opened on these clients (SIMATIC PDM sessions) must be licensed with SIMATIC PDM 1 client licenses. For details about this, refer to "SIMATIC PDM 1 Client" under "Optional product components", page 7/8.

Option SIMATIC PDM Communication FOUNDATION Fieldbus V9.0

In a SIMATIC S7/PCS 7 configuration environment, using this option SIMATIC PDM can communicate with field devices on the FOUNDATION Fieldbus H1 via the FF link.

This functionality is already integrated in the SIMATIC PDM PCS 7-FF product package.

Option SIMATIC PDM HART Server V9.0

This option permits the use of HART multiplexers from various vendors in SIMATIC PDM. Furthermore, wireless HART field devices can also be parameterized with SIMATIC PDM.

SIMATIC PDM TAGs (version-independent)

Depending on the project size, the SIMATIC PDM TAGs supplied with a product package (except SIMATIC PDM Single Point) can be cumulatively expanded with sets of 10, 100 or 1 000 SIMATIC PDM TAGs.

A SIMATIC PDM TAG corresponds to a SIMATIC PDM object that represents the individual field devices or field components within a project, e.g. measuring instruments, positioners, switching devices or remote I/Os. SIMATIC PDM TAGs are also relevant for diagnostics with the lifelist of SIMATIC PDM. In this case, TAGs are considered to be all recognized devices with diagnostics capability, whose detailed diagnostics is effected through the device description (EDD).

SIMATIC PDM 1 Client (version-independent)

Cumulative 1 client license newly introduced with SIMATIC PDM V9.0 for SIMATIC PDM configurations with SIMATIC PDM Server, e.g. SIMATIC PDM Stand alone Server or SIMATIC PDM PCS 7 Server. The license is used to activate registered SIMATIC PDM clients and SIMATIC PDM sessions (opened portals) on these clients.

Each "SIMATIC PDM 1 Client" license activates one SIMATIC PDM client with one SIMATIC PDM session. A SIMATIC PDM session is defined as one opened portal together with the parameter views of the field devices opened from the portal. Each additional simultaneously opened SIMATIC PDM session on this client requires its own "SIMATIC PDM 1 Client" license. For larger projects, up to 30 registered SIMATIC PDM Clients are possible.

The "SIMATIC PDM 1 Client" license must be transferred to the computer with the SIMATIC PDM Server. The SIMATIC PDM Standalone Server product package comes with 2 "SIMATIC PDM 1 Client" licenses.

SIMATIC PDM Software Media Package V9.0

The current SIMATIC PDM installation software is offered without a license in the form of the SIMATIC PDM Software Media Package. Purchasing of corresponding software licenses is necessary to unlock the product-specific functionalities.

With SIMATIC PDM product packages, when supplied via physical delivery (not with optional product components), a SIMATIC PDM Software Media Package is supplied together with each ordering item. Further SIMATIC PDM Software Media Packages must be ordered separately as required.

The software of the SIMATIC PDM Media Package without a license can be used for demonstration purposes in demo mode. The SIMATIC PDM functionality is limited as follows in demo mode:

- Stand alone mode
- Storage functions disabled
- Export and import functions disabled
- Expanded functionality disabled
- Communication functions restricted

Information on ordering and delivery

SIMATIC PDM is among the products for which the installation software is provided in the form of a software Media package. Software Media packages and product-specific software licenses are separate packages, which are not merged into a single delivery unit for a physical delivery.

The number of delivered software Media packages can be determined by the number of ordered items. You can find more information under "Delivery form package" in the "Software Media and Logistics", "PCS 7 Software Packages" section, page 1/2.

Function

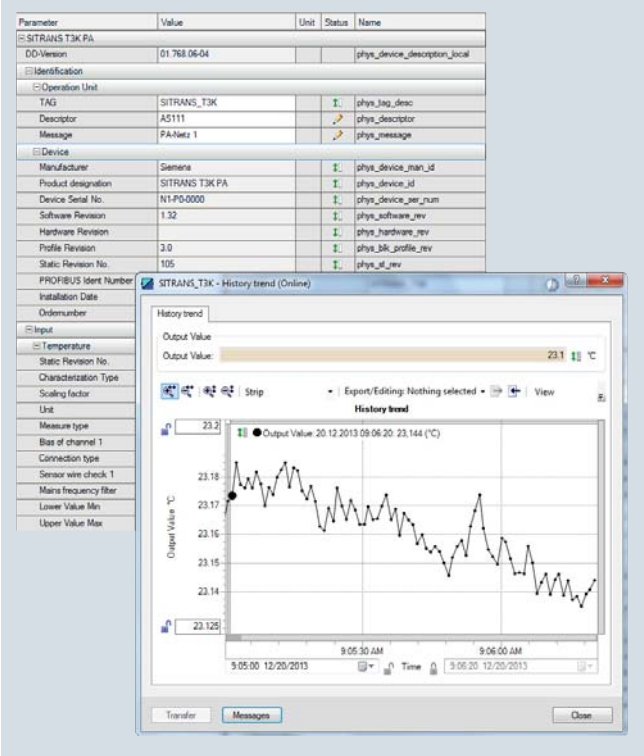

SIMATIC PDM, parameter view and trend window

SIMATIC PDM core functions

- Creation of project-specific device libraries
- Adjustment and modification of device parameters
- Comparing (e.g. project and device data)
- Plausibility testing of data input
- Device identification and testing
- Device status indication (operating modes, interrupts, states)
- Simulation
- Diagnostics (standard, detailed)
- Export/import (parameter data, logs, documents)
- Management (e.g. networks and PCs)
- Commissioning functions, e.g. measuring circuit tests of device data
- Lifecycle management functions, e.g. for device replacement
- Global and device-specific modification logbook for user operations (audit trail)
- Device-specific calibration reports
- Graphic presentations of echo envelope curves, trend displays, valve diagnosis results etc.
- Presentation of incorporated manuals
- Document manager for integration of up to 10 multiMedia files

Integration

Device integration

SIMATIC PDM supports all devices described by EDD (Electronic Device Description). EDD is standardized to EN 50391 and IEC 61804. Internationally it is the most widely used standardized technology for device integration. At the same time, it is the guideline of the established organizations for

- PROFIBUS and PROFINET (PI – PROFIBUS & PROFINET International)
- HART (HCF: HART Communication Foundation)
- FF (Fieldbus Foundation)

The devices are integrated directly in SIMATIC PDM through a company-specific EDD or the current HCF or Fieldbus Foundation libraries. To achieve improved transparency, they can be managed in project-specific device libraries.

Field devices are described in the EDD in terms of functionality and construction using the Electronic Device Description Language (EDDL). Using this description, SIMATIC PDM automatically creates its user interfaces with the specific device data. Existing devices can be updated, and further devices integrated into SIMATIC PDM, by simply importing the manufacturer's device-specific EDD.

Fieldbus Foundation provides pre-defined device descriptions (standard DD) for the basic functions of specific field device types. The basic functions are implemented using various standard function and transmission blocks.

Technical support

If you wish to use devices which cannot be found in the SIMATIC PDM device description library, we would be pleased to help you integrate them.

Support Request

You can request support by service specialists at Technical Support by using a "Support Request" on the Internet:

www.siemens.com/automation/support-request

Contacts in the Region

The Technical Support responsible for your Region can be found on the Internet at:

www.automation.siemens.com/partner

Technical specifications

SIMATIC PDM V9.0	
Hardware	• PG/PC/notebook with processor corresponding to operating system requirements
Operating system (alternatives)	Can be used generally: • Windows 7 Professional/Ultimate/Enterprise SP1, 32-bit/64-bit Only with integration in SIMATIC PCS 7: • Windows Server 2008 R2 SP1 Standard Edition, 64-bit • Windows Server 2012 R2 SP1 Standard Edition, 64-bit
Integration in STEP 7/PCS 7	• SIMATIC PCS 7 V8.0+SP2 (without Communication FOUNDATION Fieldbus) • SIMATIC PCS 7 V8.1/V8.2 (with/without ServicePack) • STEP 7 V5.5+SP4
SIMATIC PDM Client	• Internet Explorer 10 or 11

Ordering data

	Article No.
SIMATIC PDM Stand alone product packages	
Minimum configuration	
SIMATIC PDM Single Point V9.0 including 1 TAG; product package for operation and configuration of one field device; communication via PROFIBUS DP/PA, HART (modem, RS 232, PROFIBUS/PROFINET), Modbus, Ethernet or PROFINET Additional functions or SIMATIC PDM TAGs are not possible 6 languages (English, German, French, Italian, Spanish, Chinese), software class A, runs on Windows 7 Ultimate 32/64-bit, Windows Server 2008 R2 Standard 64-bit, or Windows Server 2012 R2 Standard 64-bit, floating license for 1 user	
• Goods delivery (without SIMATIC PCS 7 Software Media Package) License key on USB flash drive and certificate of license, bundled with 1 × SIMATIC PDM Software Media Package per ordering position	**6ES7658-3HA58-0YA5**
• Online delivery (without SIMATIC PCS 7 Software Media Package) License Key download and online certificate of license combined with SIMATIC PDM Software Media Package (SIMATIC PDM and device library software download) Note: Email address required!	**6ES7658-3HA58-0YH5**
Basic configuration for individual product package as well as local service and parameter assignment stations	
SIMATIC PDM Basic V9.0 including 4 TAGs; product package for operation and configuration of field devices and components; communication via PROFIBUS DP/PA, HART (modem, RS 232, PROFIBUS/PROFINET), Modbus, Ethernet or PROFINET 6 languages (English, German, French, Italian, Spanish, Chinese), software class A, runs on Windows 7 Ultimate 32/64-bit, Windows Server 2008 R2 Standard 64-bit, or Windows Server 2012 R2 Standard 64-bit, floating license for 1 user	
• Goods delivery (without SIMATIC PCS 7 Software Media Package) License key on USB flash drive and certificate of license, bundled with 1 × SIMATIC PDM Software Media Package per ordering position	**6ES7658-3AB58-0YA5**
• Online delivery (without SIMATIC PCS 7 Software Media Package) License key download and online certificate of license combined with SIMATIC PDM Software Media Package (SIMATIC PDM and device library software download) Note: Email address required!	**6ES7658-3AB58-0YH5**

	Article No.
Configuration for local service and parameter assignment station	
SIMATIC PDM Service V9.0 Product package for service and measuring circuit tests on a local service station, with • SIMATIC PDM Basic incl. 4 TAGs • 50 TAGs 6 languages (English, German, French, Italian, Spanish, Chinese), software class A, runs on Windows 7 Ultimate 32/64-bit, Windows Server 2008 R2 Standard 64-bit, or Windows Server 2012 R2 Standard 64-bit, floating license for 1 user	
• Goods delivery (without SIMATIC PCS 7 Software Media Package) License key on USB flash drive and certificate of license, bundled with 1 × SIMATIC PDM Software Media Package per ordering position	**6ES7658-3JD58-0YA5**
• Online delivery (without SIMATIC PCS 7 Software Media Package) License key download and online certificate of license combined with SIMATIC PDM Software Media Package (SIMATIC PDM and device library software download) Note: Email address required!	**6ES7658-3JD58-0YH5**
Configuration for central service and parameter assignment station	
SIMATIC PDM Stand alone Server V9.0 Product package for service and device management in plant units, with - SIMATIC PDM Basic incl. 4 TAGs - SIMATIC PDM Extended - SIMATIC PDM Server - 2 × SIMATIC PDM 1 Client - 100 TAGs 6 languages (German, English, French, Italian, Spanish, Chinese), software class A, runs with Windows 7 Ultimate 32/64-bit, Windows Server 2008 R2 Standard 64-bit, or Windows Server 2012 R2 Standard 64-bit, single license for 1 installation	
• Goods delivery (without SIMATIC PCS 7 Software Media Package) License key on USB flash drive and certificate of license, bundled with 1 × SIMATIC PDM Software Media Package per ordering position	**6ES7658-3TX58-0YA5**
• Online delivery (without SIMATIC PCS 7 Software Media Package) License key download and online certificate of license combined with SIMATIC PDM Software Media Package (SIMATIC PDM and device library software download) Note: Email address required!	**6ES7658-3TX58-0YH5**

Ordering data

	Article No.
SIMATIC PDM system-integrated product packages	
Configuration for local SIMATIC S7 engineering and service station	
SIMATIC PDM S7 V9.0 Product package for use in a SIMATIC S7 configuration environment, with - SIMATIC PDM Basic incl. 4 TAGs - SIMATIC PDM Extended - SIMATIC PDM integration in STEP 7/PCS 7 - 100 TAGs 6 languages (English, German, French, Italian, Spanish, Chinese), software class A, runs on Windows 7 Ultimate 32/64-bit, Windows Server 2008 R2 Standard 64-bit, or Windows Server 2012 R2 Standard 64-bit, floating license for 1 user	
• Goods delivery (without SIMATIC PCS 7 Software Media Package) License key on USB flash drive and certificate of license, bundled with 1 × SIMATIC PDM Software Media Package per ordering position	**6ES7658-3KD58-0YA5**
• Online delivery (without SIMATIC PCS 7 Software Media Package) License key download and online certificate of license combined with SIMATIC PDM Software Media Package (SIMATIC PDM and device library software download) Note: Email address required!	**6ES7658-3KD58-0YH5**
Configuration for central SIMATIC PCS 7 engineering and service stations	
SIMATIC PDM PCS 7 V9.0 Product package for use in a SIMATIC PCS 7 configuration environment 6 languages (German, English, French, Italian, Spanish, Chinese), software class A, runs with Windows 7 Ultimate 32/64-bit, Windows Server 2008 R2 Standard 64-bit, or Windows Server 2012 R2 Standard 64-bit floating license for 1 user, with - SIMATIC PDM Basic incl. 4 TAGs - SIMATIC PDM Extended - SIMATIC PDM integration in STEP 7/PCS 7 - SIMATIC PDM Routing - 100 TAGs	
• Goods delivery (without SIMATIC PCS 7 Software Media Package) License key on USB flash drive and certificate of license, bundled with 1 × SIMATIC PDM Software Media Package per ordering position	**6ES7658-3LD58-0YA5**
• Online delivery (without SIMATIC PCS 7 Software Media Package) License Key download and online certificate of license combined with SIMATIC PDM Software Media Package (SIMATIC PDM and device library software download) Note: Email address required!	**6ES7658-3LD58-0YH5**

	Article No.
SIMATIC PDM PCS 7-FF V9.0 Product package for use in a SIMATIC PCS 7 configuration environment, including FOUNDATION Fieldbus H1 communication 6 languages (German, English, French, Italian, Spanish, Chinese), software class A, runs with Windows 7 Ultimate 32/64-bit, Windows Server 2008 R2 Standard 64-bit, or Windows Server 2012 R2 Standard 64-bit floating license for 1 user, with - SIMATIC PDM Basic incl. 4 TAGs - SIMATIC PDM Extended - SIMATIC PDM integration in STEP 7/PCS 7 - SIMATIC PDM Routing - SIMATIC PDM Communication FOUNDATION Fieldbus - 100 TAGs	
• Goods delivery (without SIMATIC PCS 7 Software Media Package) License key on USB flash drive and certificate of license, bundled with 1 × SIMATIC PDM Software Media Package per ordering position	**6ES7658-3MD58-0YA5**
• Online delivery (without SIMATIC PCS 7 Software Media Package) License key download and online certificate of license combined with SIMATIC PDM Software Media Package (SIMATIC PDM and device library software download) Note: Email address required!	**6ES7658-3MD58-0YH5**
SIMATIC PDM PCS 7 Server V9.0 Product package for use in a SIMATIC PCS 7 configuration environment, including server functionality 6 languages (German, English, French, Italian, Spanish, Chinese), software class A, runs with Windows 7 Ultimate 32/64-bit, Windows Server 2008 R2 Standard 64-bit, or Windows Server 2012 R2 Standard 64-bit Single license for 1 installation, with - SIMATIC PDM Basic incl. 4 TAGs - SIMATIC PDM Extended - SIMATIC PDM integration in STEP 7/PCS 7 - SIMATIC PDM Routing - SIMATIC PDM Server - 100 TAGs	
• Goods delivery (without SIMATIC PCS 7 Software Media Package) License key on USB flash drive and certificate of license, bundled with 1 × SIMATIC PDM Software Media Package per ordering position	**6ES7658-3TD58-0YA5**
• Online delivery (without SIMATIC PCS 7/SIMATIC PDM Software Media Package) License key download and online certificate of license combined with SIMATIC PDM Software Media Package (SIMATIC PDM and device library software download) Note: Email address required!	**6ES7658-3TD58-0YH5**

Ordering data

	Article No.
Optional product components for SIMATIC PDM	
SIMATIC PDM Extended V9.0 For enabling additional system functions 6 languages (English, German, French, Italian, Spanish, Chinese), software class A, runs on Windows 7 Ultimate 32/64-bit, Windows Server 2008 R2 Standard 64-bit, or Windows Server 2012 R2 Standard 64-bit, floating license for 1 user	
• Goods delivery (without SIMATIC PCS 7/SIMATIC PDM Software Media Package) License key on USB flash drive and certificate of license	**6ES7658-3NX58-2YB5**
• Online delivery (without SIMATIC PCS 7/SIMATIC PDM Software Media Package) License key download and online certificate of license Note: E-mail address required!	**6ES7658-3NX58-2YH5**
SIMATIC PDM Integration in STEP 7/SIMATIC PCS 7 V9.0 For integration in a SIMATIC S7/SIMATIC PCS 7 configuration environment 6 languages (English, German, French, Italian, Spanish, Chinese), software class A, runs on Windows 7 Ultimate 32/64-bit, Windows Server 2008 R2 Standard 64-bit, or Windows Server 2012 R2 Standard 64-bit, floating license for 1 user	
• Goods delivery (without SIMATIC PCS 7/SIMATIC PDM Software Media Package) License key on USB flash drive and certificate of license	**6ES7658-3BX58-2YB5**
• Online delivery (without SIMATIC PCS 7/SIMATIC PDM Software Media Package) License key download and online certificate of license Note: E-mail address required!	**6ES7658-3BX58-2YH5**
SIMATIC PDM Routing V9.0 For plant-wide navigation to field devices 6 languages (English, German, French, Italian, Spanish, Chinese), software class A, runs on Windows 7 Ultimate 32/64-bit, Windows Server 2008 R2 Standard 64-bit, or Windows Server 2012 R2 Standard 64-bit, floating license for 1 user	
• Goods delivery (without SIMATIC PCS 7/SIMATIC PDM Software Media Package) License key on USB flash drive and certificate of license	**6ES7658-3CX58-2YB5**
• Online delivery (without SIMATIC PCS 7/SIMATIC PDM Software Media Package) License key download, online certificate of license Note: E-mail address required!	**6ES7658-3CX58-2YH5**

	Article No.
SIMATIC PDM Server V9.0 For activating the server functionality 6 languages (German, English, French, Italian, Spanish, Chinese), software class A, runs with Windows 7 Ultimate 32/64-bit, Windows Server 2008 R2 Standard 64-bit, or Windows Server 2012 R2 Standard 64-bit, single license for 1 installation	
• Goods delivery (without SIMATIC PCS 7/SIMATIC PDM Software Media Package) License key on USB flash drive, certificate of license	**6ES7658-3TX58-2YB5**
• Online delivery (without SIMATIC PCS 7/SIMATIC PDM Software Media Package) License key download and online certificate of license Note: E-mail address required!	**6ES7658-3TX58-2YH5**
SIMATIC PDM Communication FOUNDATION Fieldbus V9.0 For communication with field devices on FOUNDATION Fieldbus H1 6 languages (English, German, French, Italian, Spanish, Chinese), software class A, runs on Windows 7 Ultimate 32/64-bit, Windows Server 2008 R2 Standard 64-bit, or Windows Server 2012 R2 Standard 64-bit, floating license for 1 user	
• Goods delivery (without SIMATIC PCS 7/SIMATIC PDM Software Media Package) License key on USB flash drive and certificate of license	**6ES7658-3QX58-2YB5**
• Online delivery (without SIMATIC PCS 7/SIMATIC PDM Software Media Package) License key download and online certificate of license Note: E-mail address required!	**6ES7658-3QX58-2YH5**
SIMATIC PDM HART Server V9.0 For using HART multiplexers as well as for configuration of wireless HART field devices 6 languages (English, German, French, Italian, Spanish, Chinese), software class A, runs on Windows 7 Ultimate 32/64-bit, Windows Server 2008 R2 Standard 64-bit, or Windows Server 2012 R2 Standard 64-bit, floating license for 1 user	
• Goods delivery (without SIMATIC PCS 7/SIMATIC PDM Software Media Package) License key on USB flash drive and certificate of license	**6ES7658-3EX58-2YB5**
• Online delivery (without SIMATIC PCS 7/SIMATIC PDM Software Media Package) License key download and online certificate of license Note: E-mail address required!	**6ES7658-3EX58-2YH5**

Ordering data

	Article No.
SIMATIC PDM 1 Client Cumulative client license for SIMATIC PDM configurations with SIMATIC PDM Server, software class A, single license for 1 installation	
• Goods delivery License key on USB flash drive and certificate of license	**6ES7658-3UA00-2YB5**
• Online delivery License key download and online certificate of license Note: Email address required!	**6ES7658-3UA00-2YH5**
SIMATIC PDM TAGs TAG licenses for expanding the available TAG volume, cumulative, software class A, floating license for 1 user	
• Goods delivery License key on USB flash drive and certificate of license	
- 10 TAGs	**6ES7658-3XC00-2YB5**
- 100 TAGs	**6ES7658-3XD00-2YB5**
- 1 000 TAGs	**6ES7658-3XE00-2YB5**
• Online delivery License key download and online certificate of license Note: E-mail address required!	
- 10 TAGs	**6ES7658-3XC00-2YH5**
- 100 TAGs	**6ES7658-3XD00-2YH5**
- 1 000 TAGs	**6ES7658-3XE00-2YH5**

	Article No.
SIMATIC PDM Software Media Package	
SIMATIC PDM Software Media Package V9.0 Installation software without license, 6 languages (German, English, French, Italian, Spanish, Chinese), software class A, runs with Windows 7 Ultimate 32/64-bit, Windows Server 2008 R2 Standard 64-bit, or Windows Server 2012 R2 Standard 64-bit Note: Can only be used in conjunction with a valid license or in demo mode!	
• Goods delivery (without SIMATIC PCS 7 Software Media Package) SIMATIC PDM and device library software on DVD	**6ES7658-3GX58-0YT8**
• Online delivery (without SIMATIC PCS 7 Software Media Package) SIMATIC PDM and device library software download Note: E-mail address required!	**6ES7658-3GX58-0YG8**

More information

Update/Upgrade

Existing installations based on SIMATIC PDM V6.x or V8.x (including SP in each case) can be upgraded directly to V9.0 with upgrade packages. Alternatively, an upgrade is also possible as part of the Software Update Service. For details, see "Software Media and logistics", "Software Update Service" section, page 1/4.

Projects with SIMATIC PDM V7.0 can only be upgraded to version 9.0 by first upgrading to version 8.0. Two upgrade packages are offered for SIMATIC PDM V8.x:

- SIMATIC PDM Upgrade Package Basic[1)] (with/without SIMATIC PDM HART Server option in each case) for configurations based on:
  - SIMATIC PDM Basic
  - SIMATIC PDM Service
  - SIMATIC PDM S7
  - SIMATIC PDM PCS 7
- SIMATIC PDM Upgrade Package Complete[1)] for configurations based on:
  - SIMATIC PDM PCS 7 Server
  - SIMATIC PDM PCS 7-FF

[1)] Optional product components for SIMATIC PDM such as PDM Extended, PDM Integration in STEP 7/PCS 7, PDM Routing, PDM Server and PDM Communication FOUNDATION Fieldbus are each included in a product package listed in the SIMATIC PDM Upgrade Package Basic or SIMATIC PDM Upgrade Package Complete and are implicitly authorized to be updated via the corresponding license. The SIMATIC PDM Upgrade Package Complete is required for use of the product components PDM Server or PDM Communication FOUNDATION Fieldbus.

For more information, see the section "Update/upgrade packages", "Updates/upgrades asynchronous to the PCS 7 version" - "Upgrades SIMATIC PDM", page 16/38.

Overview

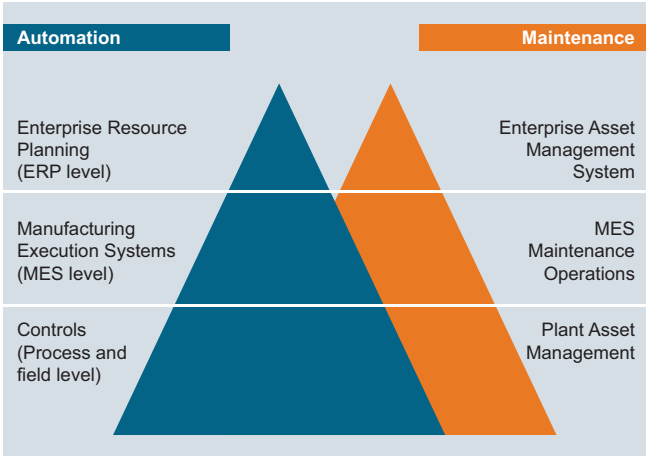

The maintenance station is specialized for plant asset management (also known as plant-floor asset management), i.e. the management of company assets that are used as fixed assets for production. Its tasks include efficient administration and management of equipment in technological systems, in particular the I&C equipment, with the objective of maintaining and increasing the value.

The following maintenance strategies are used for this purpose:

- **Corrective maintenance**
  Response to pending error and diagnostics messages
  - Failures are risked or minimized by redundant configurations
  - Maintenance in the form of repair or replacement
- **Preventive maintenance**
  Preventive diagnostics and maintenance
  - Initiation of appropriate maintenance measures before a fault actually occurs
  - Maintenance in the form of time-dependent or status-dependent maintenance (depending on degree of wear)
- **Predictive maintenance**
  Predictive diagnostics for timely detection of potential problems and determination of the remaining service life

Using the maintenance station, the maintenance engineer can check the hardware of the automation system, evaluate its diagnostics messages and information and derive maintenance measures from them. He or she is thus in a position to plan, control and document the entire maintenance cycle - starting with the arrival of a diagnostics message, continuing with the evaluation of detailed diagnostics information and the planning, initiation and tracking of maintenance measures, all the way to their completion.

SIMATIC PCS 7 Maintenance Station

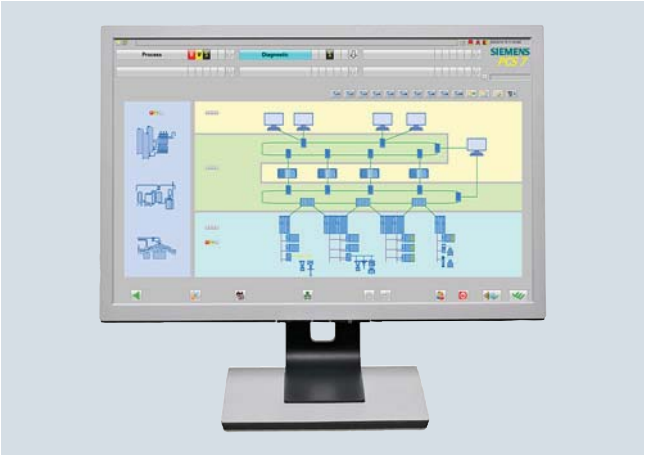

The SIMATIC PCS 7 Maintenance Station makes additional hardware or software components for plant asset management superfluous. Fully integrated in SIMATIC PCS 7, it supplements the process control system with a valuable instrument for minimizing the total cost of ownership over the complete life cycle of the plant.

Parallel to process control, the SIMATIC PCS 7 Maintenance Station provides consistent maintenance information and functions for the system components of the plant (assets):

- The plant operator receives all process-relevant information via the operator system, as well as an overview of the diagnostics status of the process control system.
- The maintenance engineer checks the hardware of the automation system using the SIMATIC PCS 7 Maintenance Station, and processes its diagnostics messages and maintenance requests.

The SIMATIC PCS 7 Maintenance Station provides maintenance and service personnel access to:

- Components of the process control system, e.g. intelligent field devices and I/O modules, fieldbuses, controllers, network components and plant buses as well as single stations, servers and clients
- Assets that do not directly belong to the process control system, such as pumps, motors, centrifuges, heat exchangers (mechanical assets) or control loops. They are represented by proxy objects in which the diagnostics rules are stored.

It is therefore no longer the case that maintenance functions and information are only available in a separate level independent of the production process.

Plant operators and service personnel are thus able to constantly act the following, for example:

- Service requests
- Service approvals
- Placing an asset in "In Service" status
- Information regarding a completed service measure

Design

Architecture

The SIMATIC PCS 7 Maintenance Station uses hardware and software components of the engineering system (ES) and operator system (OS) for asset management. Depending on the project-specific SIMATIC PCS 7 architecture, it can be implemented on the basis of a SIMATIC PCS 7 BOX (PCS 7 BOX RTX ES/OS system or PCS 7 BOX ES/OS system), a SIMATIC PCS 7 ES single station, or a client/server combination.

As a result of the close interlacing, ES, OS, and asset management functions run on common hardware. Such a multi-functional station cannot only be used for asset management, but also for system engineering or HMI.

The following table shows possible hardware/software configurations of the SIMATIC PCS 7 Maintenance Station (MS).

SIMATIC PCS 7 Maintenance Station as	Single-user system		Multi-user system (client-server combination)		
Required SIMATIC PCS 7 hardware/software	**PCS 7 BOX**	**PCS 7 ES Single Station**	**PCS 7 MS/ES Client**	**PCS 7 MS Server**	**PCS 7 ES Server or Single Station**
Basic hardware					
PCS 7 BOX RTX ES/OS system (Windows 7 Ultimate 32-bit) or PCS 7 BOX ES/OS system (Windows 7 Ultimate 64-bit)	●	–	–	–	–
SIMATIC PCS 7 ES/OS IPC[1] BCE/IE (Windows 7 Ultimate 64-bit)	–	●	●	–	● (Single Station)
SIMATIC PCS 7 OS Server IPC[1] BCE/IE (Windows 2008 R2 Standard 64-bit or Windows Server 2012 R2 Standard 64-bit)	–	–	–	●	● (Server)
Required SIMATIC PCS 7 software corresponding to operating system of basic hardware (without taking into account the quantity frameworks)					
SIMATIC PCS 7 Engineering Software AS/OS	–	●	●	–	●
Optional[2]: SIMATIC PDM PCS 7 Server[3]; optionally also SIMATIC PDM-FF[4]	●	●	–	–	●
SIMATIC PCS 7 OS Software Server	–	–	–	●	–
SIMATIC PCS 7 OS Software Client	–	–	●	–	–
SIMATIC PCS 7 Maintenance Station Engineering	●	●	●	–	●
SIMATIC PCS 7 Maintenance Station Runtime (basic package and additional asset TAGs)	●	●	–	●	–

1) IPC stands for one of the SIMATIC IPC types from the product range in the section "Industrial Workstation/IPC, SIMATIC Rack PC", which are authorized for SIMATIC PCS 7.

2) Only when using intelligent field devices or AssetMon functionality

3) Allows SIMATIC PDM to be started on every MS Client

4) SIMATIC PDM-FF required for plants with FOUNDATION Fieldbus H1

The MS Server can even be operated as a redundant pair of servers. The redundant MS servers must be configured like redundant OS servers and expanded by the SIMATIC PCS 7 Maintenance Station Runtime functionality.

The SIMATIC PCS 7 Maintenance Station Runtime basic package already contains 100 asset TAGs. These can be expanded by cumulative SIMATIC PCS 7 Maintenance Station Runtime licenses for 100 or 1 000 asset TAGs (Count Relevant Licenses).

Design (continued)

The signaling system, user interface, picture hierarchy and operator prompting are based on the HMI philosophy of the operator system. The diagnostics data of all assets are displayed on uniform faceplates whose contents depend on the intelligence of the respective component. This means that working with the SIMATIC PCS 7 Maintenance Station is simple and intuitive – a time-consuming training period is not required.

The SIMATIC PCS 7 Maintenance Station uses the optional product package SIMATIC PDM PCS 7 Server for parameter assignment and diagnostics of the devices integrated via an Electronic Device Description (EDD). The optional product component SIMATIC PDM-FF is required for plants with FOUNDATION Fieldbus H1.

For editing the devices, the user receives the functional rights corresponding to their role following identification. User management and access control for the SIMATIC PCS 7 Maintenance Station is handled by SIMATIC Logon integrated in SIMATIC PCS 7.

SIMATIC PDM supplies comprehensive device information for display and further processing on the maintenance station and can be called from any SIMATIC PCS 7 Maintenance Station Client (MS Client). The display of diagnostics displays structured according to the plant hierarchy with the operating states of the SIMATIC PCS 7 components is possible both on purely MS clients and combined MS/OS clients. The faceplates of these stations can also display the enhanced diagnostics information determined by SIMATIC PDM. A device-specific call of SIMATIC PDM is also possible. However, enhanced online diagnostics functions in conjunction with HW Config can only be called on stations that are both an MS client and engineering station for SIMATIC PCS 7 at the same time.

Configuration

The SIMATIC PCS 7 Maintenance Station is based on the hardware and software project of the application which is generated during the standard configuration with the SIMATIC PCS 7 engineering system. With system support, all data relevant to the plant asset management are derived from the project data of the application, and the diagnostics screens are also generated, simply by pressing a button. The procedure is simple, and requires no additional configuration work:

- Generation of the hardware and software project of the application
- Parameter settings for optional functionalities
- System-supported generation of the diagnostics screens with all components present in the project, including the picture hierarchy based on the project's hardware structure
- Compilation of the configuration data, and downloading to the operator station and Maintenance Station with subsequent test and commissioning phase

The names of imported pictures, icons, etc. can be permanently changed for further use in the maintenance project.

Conformity to international standards, specifications, and recommendations

Plant asset management with the SIMATIC PCS 7 Maintenance Station conforms to international standards, specifications, and recommendations. It is based on the NAMUR requirements (process control standards committee in the chemical and pharmaceutical industries) defined for systems for plant asset management and for status messages from field devices:

- NAMUR recommendation NE91 (requirements for systems for plant asset management)
- NAMUR recommendation NE 105 (requirements for the integration of fieldbus devices in engineering tools)
- NAMUR recommendation NE107 (status messages from field devices "Device failure", "Maintenance requirements", "Function check")

In addition, it also observes IEC 61804-2 for describing devices by means of the Electronic Device Description Language (EDDL) and specifications made by the PROFIBUS & PROFINET International (PI) organization, e.g.:

- PROFIBUS Profile Guidelines Identification & Maintenance Functions
- PROFIBUS PA Profile for Process Control Devices

Function

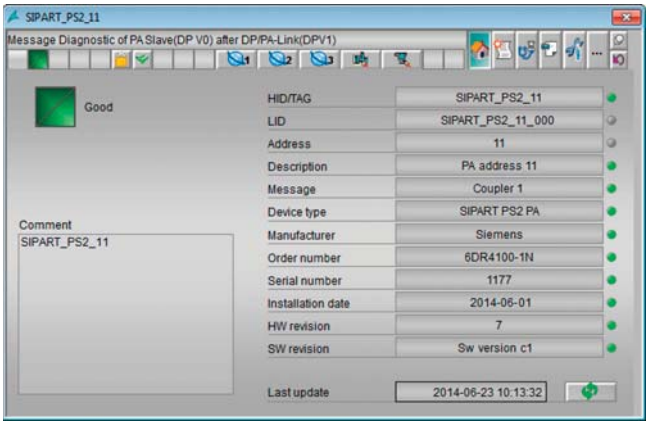

Diagnostics message of a component in the "Identity" faceplate view

The SIMATIC PCS 7 Maintenance Station provides maintenance engineers with comprehensive maintenance information on the system components (assets) of the plant. Starting from the overview display, maintenance engineers can navigate to the diagnostics displays of the subordinate hardware levels to obtain information on the diagnostics status of individual plant areas or components. If a fault is signaled in the overview display, the "Loop in alarm" function permits rapid switching to the diagnostics faceplate of the associated component.

The scope of information available depends on the individual possibilities of the asset, and is filtered according to the user's area of responsibility.

The following information is available, for example:

- Display of diagnostics status detected by the system
- Information on the component, such as process tag name, manufacturer or serial number
- Display of diagnostics messages of an individual component
- Visualization of the type and current state of the initiated maintenance measure

Information on mechanical assets

For mechanical assets without self-diagnostics (pumps, motors, etc.), the AssetMon function block can determine inadmissible operating states from various measured values and their deviations from a defined normal status. These are displayed as maintenance alarms on the SIMATIC PCS 7 Maintenance Station. AssetMon is able to process up to 3 analog values and up to 16 binary values.

In addition, AssetMon is suitable for implementation of:

- Individual diagnostics structures
- Project-specific diagnostics rules
- Condition monitoring functions

Enhanced information for assets according to IEC 61804-2

Further information can be called for assets described by the electronic device description (EDD) according to IEC 61804-2. This information is automatically read out of the components and made available by SIMATIC PDM in the background.

- Device type information (electronic rating plate)
- Detailed diagnostics information
  - Device-specific information from the vendor
  - Information on fault diagnostics and troubleshooting
  - Additional documentation
- Results of internal condition monitoring functions
- Status information (e.g. local configuration changes)
- Information on changes (audit trail report)
- Parameter information

Visualization of the maintenance information

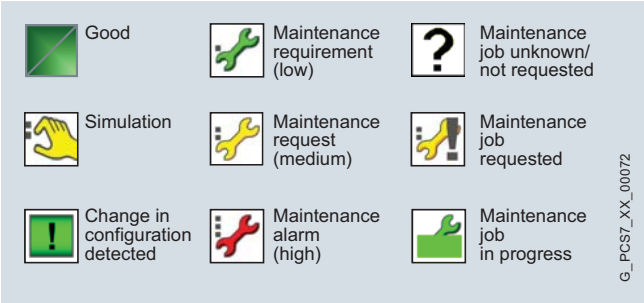

Uniform symbols for visualization of the maintenance status as well as operator prompting

The hierarchical structuring of information and the uniform symbols support the overview, facilitate orientation, and permit the maintenance engineer to rapidly access detailed information starting from the plant overview.

The symbol set defined for the plant asset management contains symbols which identify the diagnostic status of the devices/components, the relevance of the maintenance request, and the status of the maintenance measure.

Group displays in the plant overview visualize the diagnostics status of the subordinate structures/components according to a type of traffic light with red, yellow or green.

Appropriate to their significance, the components described per EDD can be marked as follows and also directly filtered using these features:

- Normal
- Important
- Safety Instrumented Function (SIF)

Diagnostics screens display the status of components and subordinate devices/components through standardized symbols with the following elements:

- Bitmap of component
- TAG identification of component
- Maintenance state display
- Group display for diagnostics status of subordinate components

Clicking an element in the symbol display either opens the subordinate hierarchy level or a component faceplate. The component faceplate offers various views of the associated component with additional device-specific information, e.g. an identification, message or maintenance view.

Ordering data

	Article No.
SIMATIC PCS 7 Maintenance Station Runtime Basic Package V8.2 including SNMP OPC server license and 100 asset TAGs	
6 languages (English, German, French, Italian, Spanish, Chinese), software class A, runs with Windows 7 Ultimate 32/64-bit, Windows Server 2008 R2 Standard 64-bit or Windows Server 2012 R2 Standard 64-bit, single license for 1 installation	
No SIMATIC PCS 7 Software Media Package	
• Physical delivery License key on USB flash drive, certificate of license	**6ES7658-7GB28-0YB0**
• Online delivery License key download, online certificate of license Note: E-mail address required!	**6ES7658-7GB28-0YH0**
SIMATIC PCS 7 Maintenance Station Runtime Asset TAGs for adding asset TAGs, cumulative	
Language-neutral, software class A, single license for 1 installation	
No SIMATIC PCS 7 Software Media Package	
• Physical delivery License key on USB flash drive, certificate of license	
- 100 asset TAGs	**6ES7658-7GB00-2YB0**
- 1 000 asset TAGs	**6ES7658-7GC00-2YB0**
• Online delivery License key download, online certificate of license Note: E-mail address required!	
- 100 asset TAGs	**6ES7658-7GB00-2YH0**
- 1 000 asset TAGs	**6ES7658-7GC00-2YH0**

	Article No.
Maintenance Station Engineering	
SIMATIC PCS 7 Maintenance Station Engineering V8.2	
6 languages (English, German, French, Italian, Spanish, Chinese), software class A, runs with Windows 7 Ultimate 32/64-bit, Windows Server 2008 R2 Standard 64-bit or Windows Server 2012 R2 Standard 64-bit, single license for 1 installation	
No SIMATIC PCS 7 Software Media Package	
• Physical delivery License key on USB flash drive, certificate of license	**6ES7658-7GX28-0YB5**
• Online delivery License key download, online certificate of license Note: E-mail address required!	**6ES7658-7GX28-0YH5**

Asset TAGs

Asset TAGs license the number of asset objects that are monitored with the SIMATIC PCS 7 Maintenance Station. An asset object represents individual hardware components within a SIMATIC PCS 7 project, e.g.

- Measuring devices monitored per EDD, positioners, switching devices, or remote I/O stations
- Basic devices or Ethernet components monitored per OPC coupling in the Maintenance Station

The asset TAGs of the SIMATIC PCS 7 Maintenance Station Runtime licenses (sets of 100 and 1 000) are cumulative (Count Relevant Licenses).

Automation systems

8

Overview

SIMATIC PCS 7 automation systems in various designs: Modular S7-400 systems plus Microbox system

Automation systems are available in different designs for the SIMATIC PCS 7 process control system. The automation performance can therefore be finely scaled within wide limits.

The automation systems offered can be classified as follows:

- Modular systems of the S7-400 series with hardware controller in the versions "Standard", "High Availability" and "Safety-related"
  - AS 410 automation systems
  - Complementary S7-400 systems
- Embedded systems with software controller
  - Microbox automation system SIMATIC PCS 7 RTX in product versions SIMATIC PCS 7 AS RTX PROFIBUS and SIMATIC PCS 7 AS RTX PROFINET

Application

Automation system with APL	AS 412H	AS 414-3	AS 414-3IE	AS 414H	AS 416-2	AS 416-3	AS 416-3IE	AS 416H	AS 417-4	AS 417H	AS RTX
	I-----	--------	--------	--------	--------	AS 410	--------	--------	--------	-----I	
Analog value measurements	10	150	150	100	300	500	500	400	800	600	300
Digital value measurements	20	300	300	250	600	1 000	1 000	800	1 400	1 000	600
PID controls	5	50	50	50	100	200	200	150	250	200	200
Motors	7	75	75	75	150	250	250	200	450	400	150
Valves	7	75	75	75	150	250	250	200	450	400	250
SFC	0	15	15	15	60	100	100	100	200	200	100
Steps	0	150	150	150	700	1 000	1 000	1 000	2 000	2 000	800
Dosing	0	5	5	3	20	25	25	25	50	50	50
Digital inputs DI	30	450	450	300	900	1 500	1 500	1 200	2 200	1 800	1 200
Digital outputs DO	10	150	150	110	300	500	500	400	750	650	400
Analog inputs AI	15	225	225	150	450	750	750	600	1 100	900	600
Analog outputs AO	5	75	75	50	150	250	250	200	350	350	200
Process objects (PO)	30	450	450	350	900	1 500	1 500	1 200	2 200	2 000	1 200

Typical mixed configuration limits for SIMATIC PCS 7 automation systems, based on the SIMATIC PCS 7 Advanced Process Library (APL)

Note:

The values quoted here are not AS-specific maximum values for the particular item. Instead, they represent a typical distribution of the available total capacity of the AS during mixed operation of all the items of a contiguous block.

The number of process objects is not an absolute value, but depends on the library used as well as on the number and type of blocks used in the application.

Application (continued)

Modular automation systems of the S7-400 range

AS type	CPU	Interfaces			
		PN/IE (2 ports)	MPI/DP	DP	DP module as optional plug-in
Standard systems					
AS 410S	CPU 410-5H Process Automation	2	–	1	–
AS 414-3	CPU 414-3	–	1	1	1
AS 414-3IE	CPU 414-3 PN/DP	1	1	–	1
AS 416-2	CPU 416-2	–	1	1	–
AS 416-3	CPU 416-3	–	1	1	1
AS 416-3IE	CPU 416-3 PN/DP	1	1	–	1
AS 417-4	CPU 417-4	–	1	1	2
High Availability and safety-related systems					
AS 410H/F/FH	CPU 410-5H Process Automation (1 × or 2 ×)	2	–	1	–
AS 412H/F/FH	CPU 412-5H (1 × or 2 ×)	1	1	1	–
AS 414H/F/FH	CPU 414-5H (1 × or 2 ×)	1	1	1	–
AS 416H/F/FH	CPU 416-5H (1 × or 2 ×)	1	1	1	–
AS 417H/F/FH	CPU 417-5H (1 × or 2 ×)	1	1	1	–

The rugged automation systems of the S7-400 series are suitable for universal use. They are characterized by high processing and communication performance. The product range offered basically differs in the following features:

- **AS 410 automation systems**
  - Preferred systems for new plants with SIMATIC PCS 7
  - Suitable for SIMATIC PCS 7 as of V8.0+SP1, an additional Hardware Upgrade Package (HUP CPU 410-5H) is required for SIMATIC PCS 7 V8.0+SP1
  - Standard systems, high availability systems, and safety-related systems are based on the very same CPU
  - Performance of the general purpose CPU is scalable and expandable based on the number of process objects
  - Changes in the type of module during operation (TCiR) possible together with the SIMATIC PCS 7 Engineering System V8.1 and higher
- **Complementary S7-400 systems**
  - Can be used in plants with SIMATIC PCS 7 V8/V7
  - As an alternative to AS 410, primarily in systems with SIMATIC PCS 7 V7
  - Scalable based on types of CPU differing in performance

The CPU for all automation systems of the S7-400 series is already equipped as standard with the PROFIBUS DP fieldbus connection. Depending on the type of CPU, one or two further PROFIBUS DP interfaces are possible directly on the CPU using additive IF 964 DP interface modules. If required, up to 10 PROFIBUS communication modules can be additionally operated on each CPU.

S7-400 automation systems can be integrated via a PROFINET interface into the CPU in PROFINET IO, some types via communication module CP 443-1 as well.

Embedded automation systems

The embedded automation system SIMATIC PCS 7 AS RTX is a low-priced compact Microbox system with excellent physical properties. It is especially well-suited for plant-level use in the low to medium performance range or as an OEM product, e.g. in Package Units. Depending on the selected product variant, it is possible to connect the process I/O via a routing-capable PROFIBUS DP interface (SIMATIC PCS 7 AS RTX PROFIBUS) or a PROFINET interface (SIMATIC PCS 7 AS RTX PROFINET).

More information

Online configurators

Selected SIMATIC S7-400 components are combined as "AS bundles" according to the task involved for the modular SIMATIC PCS 7 automation systems. Configurators are available in the Industry Mall help you to assemble the AS bundles:

- Online configurators for AS 410 automation systems
  - SIMATIC PCS 7 AS 410 Single Station configurator
  - SIMATIC PCS 7 AS 410 Redundancy Station configurator
- Online configurators for complementary S7-400 systems
  - SIMATIC PCS 7 AS Single Station configurator
  - SIMATIC PCS 7 AS Redundancy Station configurator

Overview

With the rugged all-round AS 410 system, the SIMATIC PCS 7 process control system offers an exclusive automation system from the SIMATIC S7-400 series, which can be used in all domains due to its versatility. Depending on the requirements, you can configure it as a:

- Standard AS 410S automation system
- High Availability AS 410H automation system
- Safety-related AS 410F/FH automation system

With its high-performance hardware and optimized firmware, the innovative CPU 410-5H Process Automation of the AS 410 covers the entire spectrum of conventional AS 412 to AS 417 automation systems. Its automation performance can be scaled with system expansion cards based on the number of SIMATIC PCS 7 process objects (POs) as follows:

- 100 POs
- 500 POs
- 1 000 POs
- 1 600 POs
- ≥ 2 000 POs (PO 2k+)

The CPU performance defined by the system expansion card can be increased with CPU 410 Expansion Packs for 100 and 500 POs. The type reduction to a single CPU offers numerous advantages. It significantly simplifies selection and configuration of the automation system as well as spare part inventory and plant expansion.

Design

Similar to all SIMATIC PCS 7 automation systems of the S7-400 series, AS 410 automation systems are available as "AS bundles" as follows:

- Individual components bundled per system in one delivery
- Pre-assembled and tested complete systems (no extra charge compared to delivery of individual components)

The AS bundles come furnished with the SIMATIC PCS 7 Runtime license for 100 process objects (PO). Building on this, the number of process objects can be increased with cumulative AS Runtime licenses for 100, 1 000 or 10 000 POs.

The configuration of the AS bundles as well as the Article No.'s can be defined by selecting pre-configured ordering units. System-specific ordering configurations are available in tabular form for this purpose in the sections "Standard automation systems", "High Availability automation systems" and "Safety-related automation systems".

For interactive configuration of AS bundles, there are also two online configurators available in the Industry Mall:

- SIMATIC PCS 7 AS 410 Single Station configurator
- SIMATIC PCS 7 AS 410 Redundancy Station configurator

CPU, aluminum rack (except UR1), optionally redundant or redundant power supply modules (in 4 A and 10 A versions), communication modules and sync modules of the SIMATIC PCS 7 AS 410 bundles have an additional coating (conformal coating).

AS 410 bundles for operating temperatures up to 70 °C

The AS 410 bundles are usually designed for operating temperatures up to 60 °C. Additional designs are available for extreme conditions; these are permitted for operating temperatures up to 70 °C. Their components mainly carry the designation "XTR" (extended temperature range) in their names. All components of the "AS 410 bundles for the extended temperature range (XTR)" also have an additional coating (conformal coating).

The Article No.'s of the AS 410 bundles for the extended temperature range (XTR) can be defined in the sections "Standard automation systems", "High Availability automation systems" and "Safety-related automation systems" by means of an individual configuration table.

Design (continued)

Flexible and scalable availability

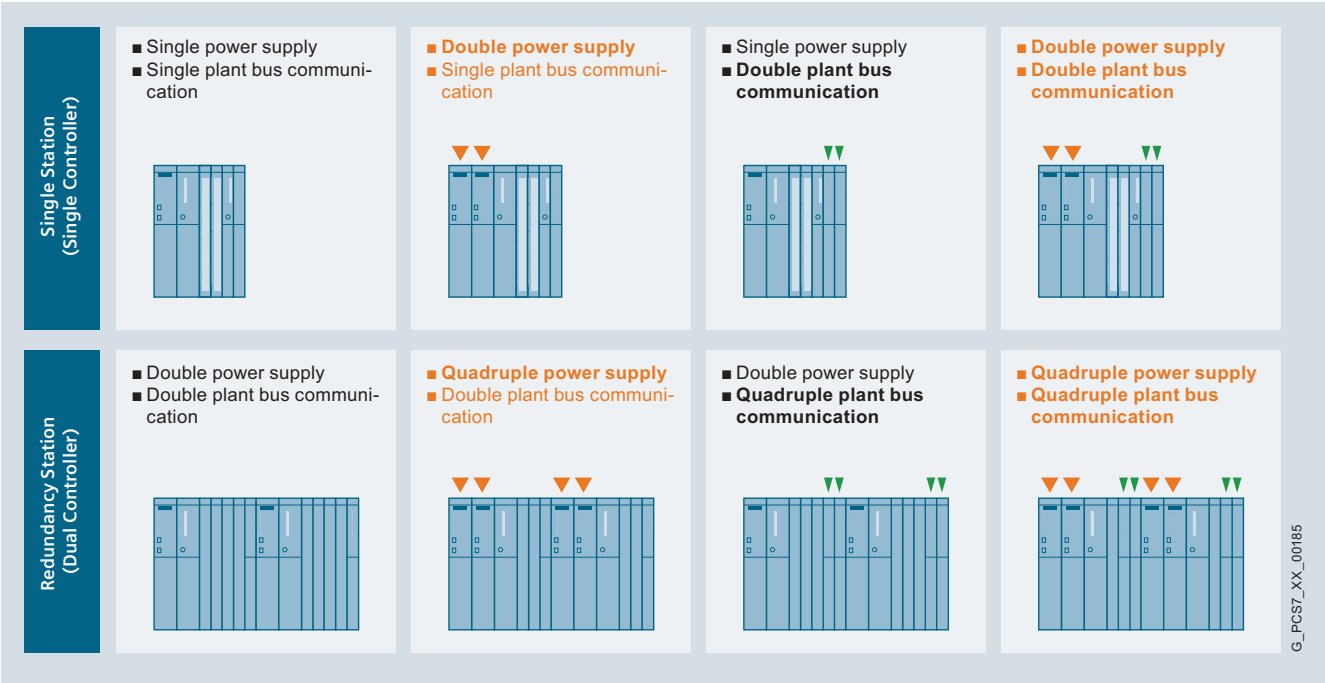

A particular characteristic of the modular S7-400 systems is the flexible and scalable availability of various components.

For a SIMATIC PCS 7 AS Single Station of the AS 410 type, you have the option of specifically increasing the availability by implementing a redundant configuration of the power supply or the Industrial Ethernet communications module, and combining these measures.

Even the AS Redundancy Station of the AS 410 type with its redundant CPUs offers significantly higher availability. It operates according to the 1oo2 principle, in which a switch is made from the active subsystem to the standby system in the event of a fault. Starting from here, you can double the power supply or the Industrial Ethernet communications module for each subsystem, and combine these measures.

CPU 410-5H Process Automation

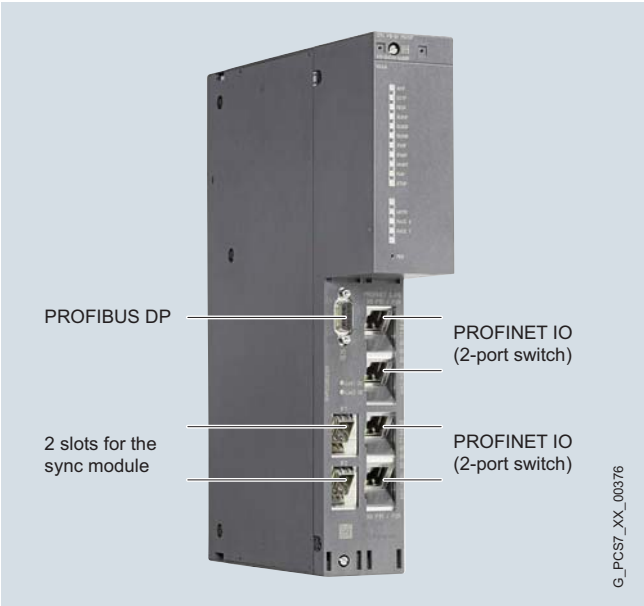

CPU 410-5H Process Automation

The CPU 410-5H Process Automation is at the heart of the standard automation systems as well as the high-availability and safety-related AS 410 automation systems. With expansion cards for 100 PO, 500 PO, 1 000 PO, 1 600 PO and ≥ 2 000 PO (PO 2k+), you can define your performance for your specific application with up to around 2 600 PO.

If the performance limit defined by the system expansion card is reached during configuration, commissioning or operation, a subsequent increase in performance is possible without replacing the hardware by using an appropriate number of CPU 410 Expansion Packs 100 POs/500 POs.

As shown in the figure, CPU 410-5H Process Automation is equipped with two PROFINET IO interfaces (2-port switch in each case) for up to 250 I/O devices and a PROFIBUS DP interface for up to 96 PROFIBUS DP slaves. Two integrated slots allow the synchronization of two redundant subsystems via sync modules and sync cables (FOC).

CPU 410-5H Process Automation supports NTP as well as S7 time synchronization.

Design (continued)

Other features include:

- Integrated 48 MB load memory and 16 MB RAM each for program and data
- Cycle time up to 10 ms/9 process tasks
- Total number of I/Os (on PROFIBUS DP and PROFINET IO) approx. 7 500, 16 KB each for inputs and outputs
- Additional protection of the circuit board with coating (conformal coating)
- Expanded temperature range during operation up to 70 °C (as of product version 2)
- High-precision time stamping
- Recessed RESET button
- Preset hardware parameters (PCS 7 skinning)
- Changes in the type of module during operation (TCiR) in association with the SIMATIC PCS 7 Engineering System V8.1 and higher

For detailed information about CPU 410-5H Process Automation, see "Technical specifications".

I/O connection via PROFIBUS DP

The distributed process I/O can be integrated into a PROFIBUS DP segment either directly or via a lower-level fieldbus (PROFIBUS PA or FOUNDATION Fieldbus H1). For details on this, see the sections "Communication", "PROFIBUS DP", "PROFIBUS PA" and "FOUNDATION Fieldbus H1".

PROFIBUS DP segments with distributed process I/O can be operated on a PROFIBUS DP interface in the CPU and on additive CP 443-5 Extended (conformal coating) PROFIBUS DP interfaces. You can configure up to 4 individual or redundant CP 443-5 Extended PROFIBUS DP interfaces (conformal coating) for an automation system using the configurators for SIMATIC PCS 7 automation systems in the Industry Mall as well as in the catalog sections "Standard automation systems", "High Availability automation systems" and "Safety-related automation systems".

You can additionally implement further PROFIBUS interfaces using separately ordered CP 443-5 Extended PROFIBUS DP interfaces (conformal coating). According to the manual, up to 10 CP 443-5 Extended interfaces (conformal coating) can be operated in one automation system.

I/O connection via PROFINET IO

You can easily and efficiently connect AS 410 automation systems to remote I/O stations via the PROFINET IO interfaces integrated in the CPU 410-5H Process Automation, for example, to remote ET 200M or ET 200SP I/O stations (see also the section "Communication", "PROFINET"). PROFINET IO interfaces made available by additive communication modules of the CP 443-1 type (conformal coating) cannot be used.

Technical specifications

CPU 410-5H Process Automation	
General information	
Firmware version	V8.1
Engineering with	SIMATIC PCS 7 as of V8.1
Degree of protection	IP20
Version	with conformal coating (ISA-S71.04 severity level G1; G2; G3) and operating temperature up to 70 °C (as of product version 2)
Power supply	
Supply voltage	5 V DC from system power supply
Input current • From backplane bus, 5 V DC max. • From interface 5 V DC, max.	 1.7 A 90 mA
Power loss, typical	7.5 W
Memory	
RAM • For program • For data	 16 MB 16 MB
Load memory, integrated	48 MB
Buffering with battery	Yes, all data
CPU performance	
Clock	450 MHz (multiprocessor system)
Average processing time of APL typicals	Approx. 110 µs
PCS 7 process objects, can be set with system expansion card	Up to approx. 2 600
Process tasks	
Cyclic interrupts (can be set from 10 ms to 5 s)	9

I/O	
Total number of I/Os	Approx. 7 500 (16 KB inputs/outputs)
Number of I/Os per DP interface	Approx. 3 800 (8 KB inputs/outputs)
Number of I/Os per PN interface	Approx. 3 800 (8 KB inputs/outputs)
Communication	
Number of S7 connections	120
Alarm_8P	10 000 (max. 80 000 messages)
Interfaces	
• X1: PROFIBUS DP	1 × up to 12 Mbit/s, 9-pin Sub-D socket
• X5: PROFINET IO with 2 ports	2 × 10/100 Mbit/s, RJ45
• X8: PROFINET IO with 2 ports	2 × 10/100 Mbit/s, RJ45
• IF1: Sync module slot (redundant systems)	Sync module 1
• IF2: Sync module slot (redundant systems)	Sync module 2
Electromagnetic compatibility (EMC)	
Emission of radio interference acc. to EN 55011	Limit class A, for use in industrial areas
Climatic conditions	
Temperature • Operation	 0 to 70 °C (as of product version 2)
Relative humidity • Operation	 0 to 95 %, without condensation
Standards, specifications, approvals	
CE mark	Yes
cULus	Yes
CSA approval	Yes
FM approval	Yes
ATEX approval	Yes
Dimensions and weights	
Dimensions (W x H x D in mm)	50 × 290 × 219
Weight	approx. 1.1 kg

Accessories

Backup batteries

Lithium backup batteries of type AA with 2.3 Ah are used in the power supply modules of all SIMATIC PCS 7 automation systems of the S7-400 range (AS bundles). Since lithium batteries are easily inflammable, more rigorous transport and storage regulations apply to them.

To avoid subjecting the AS bundles to these more rigorous transport and storage regulations, the backup batteries must be ordered and delivered separately (Article No. 6ES7971-0BA00 or 6ES7971-0BA02).

The following backup batteries are required depending on the configuration of the AS bundles:

- SIMATIC PCS 7 AS Single Station with
  - 1 power supply module: 2 units
  - 2 redundant power supply modules: 4 units
- SIMATIC PCS 7 AS Redundancy Station with
  - 2 power supply modules: 4 units
  - 2 x 2 redundant power supply modules: 8 units

Overview

Standard AS 410S automation system

The AS 410S modular standard automation systems are suitable for general use. These are always your first choice if high availability through redundancy and safety-related functions are not relevant for the application.

In the range from 100 to approx. 2 600 POs, their performance can be customized to meet the task at hand using system expansion cards (for more information, see the previous section of the catalog "Modular S7-400 systems").

An AS 410S is also the base system for a high availability (AS 410H) or a safety-related automation system (AS 410F, AS 410FH). Your decision for the AS 410S is therefore not final, you can remain flexible. If the task changes, the automation system can be used differently at any time and the target system can be expanded accordingly.

Design

Individual configuration of AS bundles

The configuration of the standard automation systems as well as the Article No.'s can be defined by selecting pre-configured ordering units.

Typical combinations can be selected from the tables in section "Ordering data" of the paper catalog. The complete range is available to you via the SIMATIC PCS 7 AS 410 Single Station online configurator in the Industry Mall.

Subsequent increase in performance

If the performance limit defined by the ordered system expansion card is reached during configuration, commissioning or operation, a subsequent increase in performance is possible by using an appropriate number of CPU 410 Expansion Packs 100 POs/500 POs. Hardware modifications are not necessary.

I/O connection via PROFIBUS DP

Several PROFIBUS DP segments with distributed process I/Os can be operated on one standard automation system. A PROFIBUS DP interface is already integrated in the CPU 410-5H Process Automation. Up to four more PROFIBUS DP interfaces can be configured via additive CP 443-5 PROFIBUS DP interfaces (conformal coating).

I/O connection via PROFINET IO

Standard AS 410S automation systems can only be connected to remote I/O stations, for example ET 200M/ET 200SP, via the two PROFINET interfaces (2-port switch) integrated in CPU 410-5H Process Automation (see also section "Communication", "PROFINET", page 10/58).

The availability of the I/O devices can be increased by a ring topology with Media redundancy (MRP). If the transmission link in the ring is interrupted at a given location, for example, due to a break in the ring cable or the failure of a station, the redundancy manager, e.g. the CPU, imMediately activates the alternative communication path.

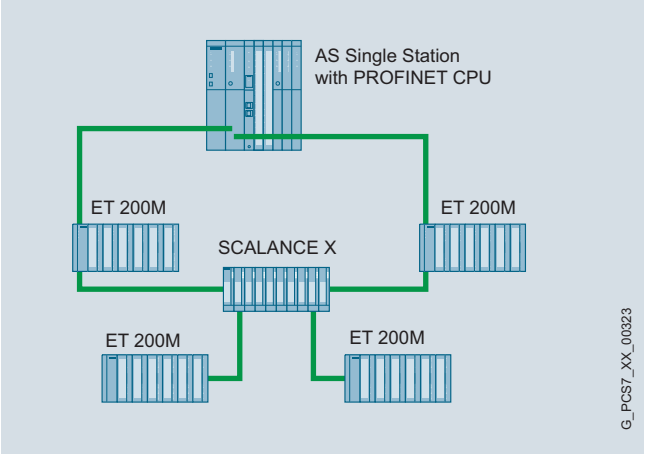

Example for PROFINET IO communication with Media redundancy

Industrial Ethernet (IE) plant bus communication

If the PROFINET interfaces integrated in the CPU are not used for PROFINET IO, they can then also be used for the connection to the Industrial Ethernet plant bus. Otherwise, the AS 410S standard automation system can be connected to the Industrial Ethernet plant bus via the CP 443-1 communication module (conformal coating). If necessary, the availability of plant bus communication can be increased by using a second CP 443-1 communication module (conformal coating).

Redundant power supply

If you have two separate power supply networks for your plant, you can increase the availability of the AS 410S standard automation systems by using two redundant power supplies.

Runtime licenses

The AS bundles come furnished with the SIMATIC PCS 7 Runtime license for 100 POs. The number of process objects can be extended by additional Runtime licenses for 100, 1 000 or 10 000 POs. The process objects of additional Runtime licenses can be added to process objects which already exist. The number and type (e.g. 100 or 1000) of additional Runtime licenses are irrelevant with regard to the implementable quantity framework.

Ordering data

	Article No.								
AS 410S CPU 410-5H with PROFIBUS DP and PROFINET IO interface 32 MB RAM (16 MB each for program and data) with SIMATIC PCS 7 AS Runtime license for 100 POs	**6ES7654-**								
	■	C	■	0	■	-	■	■	F	■
Type of delivery										
• Individual components, not pre-assembled	5									
• Pre-assembled and tested	6									
System expansion card										
• System expansion card 100 POs			J							
• System expansion card 500 POs			L							
• System expansion card 1 000 POs			N							
• System expansion card 1 600 POs			P							
• System expansion card PO 2k+ (≥ 2 000)			Q							
• System expansion card 0 PO (blank)			R							
Additive Industrial Ethernet interfaces[1]										
• Without CP 443-1					0					
• 1 × CP 443-1[2]					3					
• 2 × CP 443-1[2]					4					
Racks										
• UR2 (9 slots), aluminum[1)2)]							3			
• UR2 (9 slots), steel[1]							4			
• UR1 (18 slots), aluminum							5			
• UR1 (18 slots), steel							6			
• CR3 (4 slots), aluminum[2)3)]							7			
Power supply (without backup batteries)										
• 1 × PS 407, 4 A for 120/230 V AC/DC[2]								A		
• 1 × PS 407, 10 A for 120/230 V AC/DC								B		
• 1 × PS 407, 10 A for 120/230 V AC/DC, optional redundancy[2]								C		
• 1 × PS 407, 20 A for 120/230 V AC/DC								D		
• 2 × PS 407, 10 A for 120/230 V AC/DC, redundant[2]								E		
• 1 × PS 405, 4 A for 24 V DC[2]								F		
• 1 × PS 405, 10 A for 24 V DC								G		
• 1 × PS 405, 10 A for 24 V DC, optional redundancy[2]								H		
• 1 × PS 405, 20 A for 24 V DC								J		
• 2 × PS 405, 10 A for 24 V DC, redundant[2]								K		
Additive PROFIBUS DP interfaces[1]										
• Without CP 443-5 Extended										0
• 1 × CP 443-5 Extended[2]										1
• 2 × CP 443-5 Extended[2]										2
• 3 × CP 443-5 Extended[2]										3
• 4 × CP 443-5 Extended[2]										4

[1] Up to 5 CPs (Industrial Ethernet/PROFIBUS) can be plugged into the UR2 rack with a single power supply, or up to 3 with a redundant power supply.
[2] Conformal coating
[3] Only in conjunction with 4 A power supplies

Standard automation systems for the expanded temperature range (XTR)

	Article No.								
AS 410S CPU 410-5H with PROFIBUS DP and PROFINET IO interface 32 MB RAM (16 MB each for program and data) with SIMATIC PCS 7 AS Runtime license for 100 POs	**6ES7654-**								
	■	C	■	0	■	-	■	■	F	■
Type of delivery										
• Individual components, not pre-assembled	5									
• Pre-assembled and tested	6									
System expansion card										
• System expansion card 100 POs			J							
• System expansion card 500 POs			L							
• System expansion card 1 000 POs			N							
• System expansion card 1 600 POs			P							
• System expansion card PO 2k+ (≥ 2 000)			Q							
• System expansion card 0 PO (blank)			R							
Additive Industrial Ethernet interfaces										
• Without CP 443-1					0					
Racks										
• UR2 XTR (9 slots), aluminum[1]							3			
• CR3 XTR, 4 slots, aluminum[2]							7			
Power supply (without backup batteries)										
• 1 × PS 407, 4 A XTR for 120/230 V AC/DC								A		
• 1 × PS 407, 10 A XTR for 120/230 V AC/DC, optional redundancy								C		
• 2 × PS 407, 10 A XTR for 120/230 V AC/DC, redundant								E		
• 1 × PS 405, 4 A XTR for 24 V DC								F		
• 1 × PS 405, 10 A XTR for 24 V DC, optional redundancy								H		
• 2 × PS 405, 10 A XTR for 24 V DC, redundant								K		
Additive PROFIBUS DP interfaces										
• Without CP 443-5 Extended										0

[1] Only in conjunction with 10 A power supplies
[2] Only in conjunction with 4 A power supplies

Ordering data

Individual components

	Article No.
Individual components for AS 410S standard automation systems	
CPU 410-5H Process Automation as spare part Conformal coating; for operating temperature up to 70 °C 32 MB RAM integrated (16 MB each for program and data); module occupies 2 slots	**6ES7410-5HX08-0AB0**
CPU 410-5H Process Automation 100 PO Bundle CPU bundle, consisting of CPU 410-5H Process Automation and PCS 7 system expansion card for 100 PO	**6ES7654-5CJ00-0XF0**
CPU 410-5H Process Automation 500 PO Bundle CPU bundle, consisting of CPU 410-5H Process Automation and PCS 7 system expansion card for 500 PO	**6ES7654-5CL00-0XF0**
CPU 410-5H Process Automation 1 000 PO Bundle CPU bundle, consisting of CPU 410-5H Process Automation and PCS 7 system expansion card for 1 000 PO	**6ES7654-5CN00-0XF0**
CPU 410-5H Process Automation 1 600 PO Bundle CPU bundle, consisting of CPU 410-5H Process Automation and PCS 7 system expansion card for 1 600 PO	**6ES7654-5CP00-0XF0**
CPU 410-5H Process Automation PO 2k+ Bundle CPU bundle, consisting of CPU 410-5H Process Automation and PCS 7 system expansion card for PO 2k+ (≥ 2 000)	**6ES7654-5CQ00-0XF0**
CPU 410 expansion pack For subsequent increase in performance of the CPU 410-5H process automation Upgrade option for 1 installation, independent of language No SIMATIC PCS 7 Software Media Package	
• Physical delivery License key on USB flash drive, certificate of license	
- 100 POs	**6ES7653-2CA00-0XE0**
- 500 POs	**6ES7653-2CC00-0XE0**
• Online delivery License key download, online certificate of license Note: Email address required!	
- 100 POs	**6ES7653-2CA00-0XK0**
- 500 POs	**6ES7653-2CC00-0XK0**

	Article No.
SIMATIC NET CP 443-1 (conformal coating) Communication module for connecting SIMATIC S7-400 to Industrial Ethernet through TCP/IP, ISO, and UDP; PROFINET IO controller, MRP; integrated real-time switch ERTEC with two ports; 2 x RJ45 interface; S7 communication, open communication (SEND/RECEIVE) with FETCH/WRITE, with or without RFC 1006, DHCP, SNMP V2, diagnostics, multicast, access protection over IP access list, initialization over LAN 10/100 Mbit/s; with electronic manual on DVD	**6GK7443-1EX30-0XE1**
SIMATIC NET CP 443-5 Extended (conformal coating) Communication module for connection of SIMATIC S7-400 to PROFIBUS as DP master or for S7 communication, for increasing the number of DP lines, for data set routing with SIMATIC PDM and for 10-ms time stamping, electronic manual on CD; module occupies 1 slot	**6GK7443-5DX05-0XE1**
PS 407 power supply module with battery compartment for 2 backup batteries, module occupies 2 slots	
• **4 A XTR** (conformal coating; for operating temperature up to 70 °C) 120/230 V AC/DC; 5 V DC/4 A, 24 V DC/0.5 A	**6ES7407-0DA02-0AA1**
• **10 A** 120/230 V AC/DC; 5 V DC/10 A, 24 V DC/1 A	**6ES7407-0KA02-0AA0**
• **10 A XTR, optional redundancy** (conformal coating; for operating temperature up to 70 °C) 120/230 V UC/; 5 V DC/10 A, 24 V DC/1 A	**6ES7407-0KR02-0AA1**
• **20 A** 120/230 V AC/DC; 5 V DC/20 A, 24 V DC/1 A	**6ES7407-0RA02-0AA0**
PS 405 power supply module with battery compartment for 2 backup batteries, module occupies 2 slots	
• **4 A XTR** (conformal coating; for operating temperature up to 70 °C) 24/48/60 V DC; 5 V DC/4 A, 24 V DC/0.5 A	**6ES7405-0DA02-0AA1**
• **10 A** 24/48/60 V DC; 5 V DC/10 A, 24 V DC/1 A	**6ES7405-0KA02-0AA0**
• **10 A XTR, optional redundancy** (conformal coating; for operating temperature up to 70 °C) 24/48/60 V DC/; 5 V DC/10 A, 24 V DC/1 A	**6ES7405-0KR02-0AA1**
• **20 A** 24/48/60 V DC; 5 V DC/20 A, 24 V DC/1 A; with battery compartment for 2 backup batteries, module occupies 2 slots	**6ES7405-0RA02-0AA0**

Ordering data

	Article No.
Backup battery for PS 405/407, type AA, 3.6 V, 2.3 Ah	**6ES7971-0BA00**
XTR backup battery for PS 405/407, type AA, 3.6 V, 2.3 Ah; for operating temperature up to 70 °C	**6ES7971-0BA02**
Aluminum rack	
• UR1, 18 slots	**6ES7400-1TA11-0AA0**
• UR2 XTR, 9 slots (conformal coating; for operating temperature up to 70 °C)	**6ES7400-1JA11-0AA1**
• CR3 XTR, 4 slots (conformal coating; for operating temperature up to 70 °C)	**6ES7401-1DA01-0AA1**
Steel rack	
• UR1, 18 slots	**6ES7400-1TA01-0AA0**
• UR2, 9 slots	**6ES7400-1JA01-0AA0**

	Article No.
Runtime licenses for SIMATIC PCS 7 automation systems (can be added to existing licenses)	
SIMATIC PCS 7 AS Runtime license Language-neutral, floating license for 1 user	
No SIMATIC PCS 7 Software Media Package	
• Physical delivery License key on USB flash drive, certificate of license	
- 100 POs	**6ES7653-2BA00-0XB5**
- 1 000 POs	**6ES7653-2BB00-0XB5**
- 10 000 POs	**6ES7653-2BC00-0XB5**
• Online delivery License key download, online certificate of license Note: Email address required!	
- 100 POs	**6ES7653-2BA00-0XH5**
- 1 000 POs	**6ES7653-2BB00-0XH5**
- 10 000 POs	**6ES7653-2BC00-0XH5**

Overview

Redundancy Station AS 410H

High Availability automation systems are used to reduce the risk of production failures. The higher investment costs for high availability automation systems are frequently negligible compared to the costs resulting from production failures. The higher the costs of a production failure, the more worthwhile it is to use a high availability system.

High Availability SIMATIC PCS 7 automation systems can be used in a system configuration on their own or together with standard and safety-related automation systems.

Design

The AS 410H, which consists of two redundant, galvanically isolated subsystems, can be mounted on a UR2-H compact rack with a split backplane bus or on two separate racks (UR1 or UR2). The configuration in two racks has the advantage that the redundant subsystems are spatially separated (for example, by a fire-proof wall) and can be located far apart from each other. Depending on the sync modules used, distances from 10 m to 10 km are possible between the two subsystems. As a result of the electrical isolation, the system is also resistant to EMC interference.

Individual configuration of AS bundles

The configuration of the high availability automation systems and the Article No.'s can be defined by selecting pre-configured ordering units.

Typical combinations can be selected from the tables in section "Ordering data" of the paper catalog. The complete range for selection is available via the SIMATIC PCS 7 AS 410 Redundancy Station online configurator in the Industry Mall.

Ordering information:

- For an AS 410H redundant configuration based on two AS Single Stations (AS 410S), you additionally require 4 sync modules (up to 10 m or up to 10 km) and 2 fiber-optic sync cables. The selection depends on the distance between the two AS Single Stations.
- FO sync cables longer than 1 m must always be ordered separately (2 cables required in each case).

Subsequent increase in performance

If the performance limit defined by the ordered system expansion card is reached during configuration, commissioning or operation, a subsequent increase in performance is possible by using an appropriate number of CPU 410 Expansion Packs 100 POs/500 POs. Hardware modifications are not necessary.

I/O connection via PROFIBUS DP

The distributed process I/O can be integrated into a PROFIBUS DP segment either directly or via a lower-level fieldbus (PROFIBUS PA or FOUNDATION Fieldbus H1).

Several PROFIBUS DP segments with distributed process I/Os can be operated on an AS 410H high availability automation system. A PROFIBUS DP interface is integrated in each of the two CPUs 410-5H Process Automation. Up to four more PROFIBUS DP interfaces with add-on CP 443-5 PROFIBUS DP interfaces (conformal coating) can be configured for each redundant subsystem.

With redundant PROFIBUS DP lines, the process I/Os can be connected to an AS 410H as follows:

- ET 200M remote I/Os stations with two IM 153-2 High Feature interface modules on a special bus module
- ET 200iSP remote I/Os stations with two IM 152-1 on a special terminal module
- Field devices on the PROFIBUS PA over a PA link to two redundant IM 153-2 High Feature interface modules
- Field devices on the FOUNDATION Fieldbus H1 via a redundant Compact FF Link pair
- Non-redundant PROFIBUS DP devices, e.g. ET 200S or ET 200pro remote I/O stations per Y-Link

Design (continued)

I/O connection via PROFINET IO

High Availability AS 410H automation systems can be connected via PROFINET IO with remote I/O stations, for example, ET 200M or ET 200SP remote I/O stations. Only the PROFINET interfaces integrated in the CPUs can be used for this on the automation system.

The maximum availability with minimum error reaction times is achieved by the AS 410H when used in conjunction with system redundancy of the I/O devices. System redundancy refers to a type of PROFINET IO communication in which each I/O device establishes a communication link to each of the two CPUs of an AS 410H over the topological network. Then, the failure of a CPU does not automatically lead to failure of the connected I/O devices.

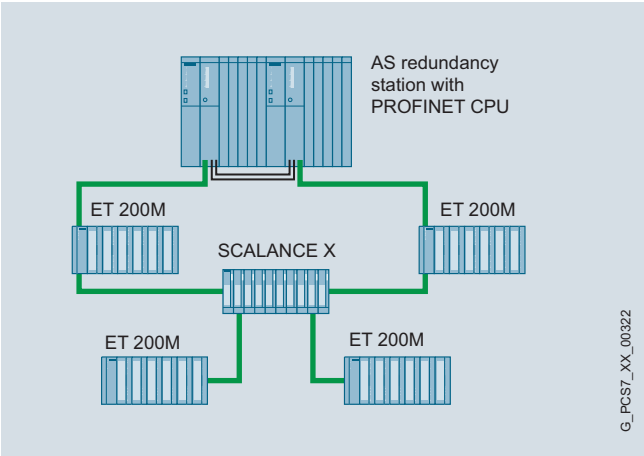

PROFINET IO communication with system redundancy

Communication via the Industrial Ethernet (IE) plant bus

If the PROFINET interfaces integrated in the CPUs of the AS 410H are not used for PROFINET IO, they can then also be used for the connection to the Industrial Ethernet plant bus. Otherwise, the two subsystems of the AS 410H can be connected to the plant bus using one CP 443-1 communication module (conformal coating) each.

The plant bus can be implemented in the form of a ring structure, which can also be configured with redundant architecture if the availability requirements are high. When there are two redundant rings it makes sense to configure two IE interface/communication modules in each case and to distribute their connections between the two rings (4-way connection). Double faults such as failure of the switch on ring 1 with simultaneous interruption of the bus cable on ring 2 can thus be tolerated.

Runtime licenses

The automation systems come furnished with the SIMATIC PCS 7 AS Runtime license for 100 process objects (PO). The number of process objects can be extended by additional Runtime licenses for 100, 1 000 or 10 000 POs. The process objects of additional Runtime licenses can be added to process objects which already exist. The number and type (e.g. 100 or 1000) of additional Runtime licenses are irrelevant.

Ordering data

	Article No.								
AS 410H (Redundancy Station) 2 x CPU 410-5H with PROFIBUS DP and PROFINET IO interface 32 MB RAM (16 MB each for program and data) with SIMATIC PCS 7 AS Runtime license for 100 POs	**6ES7656-**								
	■	C	■	■	■	-	■	■ F	■
Type of delivery									
• Individual components, not pre-assembled	5								
• Pre-assembled and tested	6								
System expansion card									
• 2 × system expansion card 100 POs			J						
• 2 × system expansion card 500 POs			L						
• 2 × system expansion card 1 000 POs			N						
• 2 × system expansion card 1 600 POs			P						
• 2 × system expansion card PO 2k+ (≥ 2 000)			Q						
• 2 × System Expansion Card 0 PO (blank)			R						
Sync modules and cables									
• 2 × 2 sync modules[2] for distances up to 10 m and 2 × FO sync cable, 1 m				3					
• 2 × 2 sync modules for up to 10 km and 2 × FO sync cable, 1 m, for testing				4					
Additive Industrial Ethernet interfaces[1]									
• Without CP 443-1					0				
• 2 × 1 CP 443-1[2]					3				
• 2 × 2 CP 443-1[2]					4				
Racks									
• 1 × UR2-H (2 × 9 slots), aluminum[1)2)]						1			
• 1 × UR2-H (2 × 9 slots), steel[1]						2			
• 2 × UR2 (9 slots), aluminum[1)2)]						3			
• 2 × UR2 (9 slots), steel[1]						4			
• 2 × CR3 (4 slots), aluminum[2)3)]						7			
Power supply (without backup batteries)									
• 2 × PS 407, 4 A for 120/230 V AC/DC[2]							A		
• 2 × PS 407, 10 A for 120/230 V AC/DC							B		
• 2 × PS 407, 10 A for 120/230 V AC/DC, optional redundancy[2]							C		
• 2 × PS 407, 20 A for 120/230 V AC/DC							D		
• 2 × 2 PS 407, 10 A for 120/230 V AC/DC, redundant[2]							E		
• 2 × PS 405, 4 A for 24 V DC[2]							F		
• 2 × PS 405, 10 A for 24 V DC							G		
• 2 × PS 405, 10 A for 24 V DC, optional redundancy[2]							H		
• 2 × PS 405, 20 A for 24 V DC							J		
• 2 × 2 PS 405, 10 A for 24 V DC, redundant[2]							K		
Additive PROFIBUS DP interfaces[1]									
• Without CP 443-5 Extended									0
• 2 × 1 CP 443-5 Extended[2]									1
• 2 × 2 CP 443-5 Extended[2]									2
• 2 × 3 CP 443-5 Extended[2]									3
• 2 × 4 CP 443-5 Extended[2]									4

1) In configurations with UR2/UR2-H racks, up to 5 CPs (Industrial Ethernet/PROFIBUS) can be configured with a single power supply per subsystem, or up to 3 CPs per subsystem with a redundant power supply.

2) Conformal coating

3) Only in conjunction with 4 A power supplies

High Availability automation systems for the expanded temperature range (XTR)

	Article No.								
AS 410H (Redundancy Station) 2 x CPU 410-5H with PROFIBUS DP and PROFINET IO interface 32 MB RAM (16 MB each for program and data) with SIMATIC PCS 7 AS Runtime license for 100 POs	**6ES7656-**								
	■	C	■	■	■	-	■	■ F	■
Type of delivery									
• Individual components, not pre-assembled	5								
• Pre-assembled and tested	6								
System expansion card									
• 2 × system expansion card 100 POs			J						
• 2 × system expansion card 500 POs			L						
• 2 × system expansion card 1 000 POs			N						
• 2 × system expansion card 1 600 POs			P						
• 2 × system expansion card PO 2k+ (≥ 2 000)			Q						
• 2 × System Expansion Card 0 PO (blank)			R						
Sync modules and cables									
• 2 × 2 sync modules V8 XTR for distances up to 10 m and 2 × FO sync cable, 1 m				3					
Additive Industrial Ethernet interfaces									
• Without CP 443-1					0				
Racks									
• 1 × UR2-H XTR (2 × 9 slots), aluminum[1]						1			
• 2 × UR2 XTR (9 slots), aluminum[1]						3			
• 2 x CR3 XTR, 4 slots, aluminum[2]						7			
Power supply (without backup batteries)									
• 2 × PS 407, 4 A XTR for UC 120/230 V							A		
• 2 × PS 407, 10 A XTR for 120/230 V AC/DC, optional redundancy							C		
• 2 × 2 PS 407, 10 A XTR for 120/230 V AC/DC, redundant							E		
• 2 × PS 405, 4 A XTR for 24 V DC							F		
• 2 × PS 405, 10 A XTR for 24 V DC, optional redundancy							H		
• 2 × 2 PS 405, 10 A XTR for 24 V DC, redundant							K		
Additive PROFIBUS DP interfaces									
• Without CP 443-5 Extended									0

1) Only in conjunction with 10 A power supplies

2) Only in conjunction with 4 A power supplies

Ordering data

Individual components

	Article No.
Individual components of the high availability SIMATIC PCS 7 AS 410H automation systems	
CPU 410-5H Process Automation as spare part Conformal coating; for operating temperature up to 70 °C 32 MB RAM integrated (16 MB each for program and data); module occupies 2 slots	**6ES7410-5HX08-0AB0**
CPU 410-5H Process Automation 100 PO Bundle CPU bundle, consisting of CPU 410-5H Process Automation and PCS 7 system expansion card for 100 PO	**6ES7654-5CJ00-0XF0**
CPU 410-5H Process Automation 500 PO Bundle CPU bundle, consisting of CPU 410-5H Process Automation and PCS 7 system expansion card for 500 PO	**6ES7654-5CL00-0XF0**
CPU 410-5H Process Automation 1 000 PO Bundle CPU bundle, consisting of CPU 410-5H Process Automation and PCS 7 system expansion card for 1 000 PO	**6ES7654-5CN00-0XF0**
CPU 410-5H Process Automation 1 600 PO Bundle CPU bundle, consisting of CPU 410-5H Process Automation and PCS 7 system expansion card for 1 600 PO	**6ES7654-5CP00-0XF0**
CPU 410-5H Process Automation PO 2k+ Bundle CPU bundle, consisting of CPU 410-5H Process Automation and PCS 7 system expansion card for PO 2k+ (≥ 2 000)	**6ES7654-5CQ00-0XF0**
CPU 410 expansion pack For subsequent increase in performance of the CPU 410-5H process automation Upgrade option for 1 installation, independent of language No SIMATIC PCS 7 Software Media Package	
• Physical delivery License key on USB flash drive, certificate of license	
- 100 POs	**6ES7653-2CA00-0XE0**
- 500 POs	**6ES7653-2CC00-0XE0**
• Online delivery License key download, online certificate of license Note: Email address required!	
- 100 POs	**6ES7653-2CA00-0XK0**
- 500 POs	**6ES7653-2CC00-0XK0**
Sync set For coupling two redundant CPUs; for distances up to	
• 10 m, consisting of 4 sync modules for up to 10 m and 2 fiber-optic sync cables, 1 m each	**6ES7656-7XX30-0XE0**
• 10 km, consisting of 4 sync modules for up to 10 km Note: please order fiber-optic sync cables (2 units) in the required length separately.	**6ES7656-7XX40-0XE0**

	Article No.
Sync module For coupling two redundant CPUs; 2 modules required for each CPU; for distances up to	
• 10 m	**6ES7960-1AA06-0XA0**
• 10 km	**6ES7960-1AB06-0XA0**
Sync module V8 XTR (Conformal coating; for operating temperature up to 70 °C) For coupling two redundant CPUs; 2 modules required for each CPU; for distances up to 10 m	**6ES7960-1AA08-0XA0**
Sync cable (fiber-optic cable) For connecting two redundant CPUs, 2 cables required for each redundant automation system	
• 1 m	**6ES7960-1AA04-5AA0**
• 2 m	**6ES7960-1AA04-5BA0**
• 10 m	**6ES7960-1AA04-5KA0**
Other lengths	On request
SIMATIC NET CP 443-1 (conformal coating) Communication module for connecting SIMATIC S7-400 to Industrial Ethernet through TCP/IP, ISO and UDP; PROFINET IO controller, MRP; integrated real-time switch ERTEC with 2 ports; 2 x RJ45 interface; S7 communication, open communication (SEND/RECEIVE) with FETCH/WRITE, with or without RFC 1006, DHCP, SNMP V2, diagnostics, multicast, access protection over IP access list, initialization over LAN 10/100 Mbit/s; with electronic manual on DVD	**6GK7443-1EX30-0XE1**
SIMATIC NET CP 443-5 Extended (conformal coating) Communication module for connection of SIMATIC S7-400 to PROFIBUS as DP master or for S7 communication, for increasing the number of DP lines, for data set routing with SIMATIC PDM and for 10-ms time stamp, electronic manual on CD; module occupies 1 slot	**6GK7443-5DX05-0XE1**
PS 407 power supply module with battery compartment for 2 backup batteries, module occupies 2 slots	
• **4 A XTR** (conformal coating; for operating temperature up to 70 °C) 120/230 V UC; 5 V DC/4 A, 24 V DC/0.5 A	**6ES7407-0DA02-0AA1**
• **10 A** 120/230 V AC/DC; 5 V DC/10 A, 24 V DC/1 A	**6ES7407-0KA02-0AA0**
• **10 A XTR, optional redundancy** (conformal coating; for operating temperature up to 70 °C) 120/230 V UC/; 5 V DC/10 A, 24 V DC/1 A	**6ES7407-0KR02-0AA1**
• **20 A** 120/230 V AC/DC; 5 V DC/20 A, 24 V DC/1 A	**6ES7407-0RA02-0AA0**

Ordering data

	Article No.
PS 405 power supply module with battery compartment for 2 backup batteries, module occupies 2 slots	
• **4 A XTR** (conformal coating; for operating temperature up to 70 °C) 24/48/60 V DC; 5 V DC/4 A, 24 V DC/0.5 A	**6ES7405-0DA02-0AA1**
• **10 A** 24/48/60 V DC; 5 V DC/10 A, 24 V DC/1 A	**6ES7405-0KA02-0AA0**
• **10 A XTR, optional redundancy** (conformal coating; for operating temperature up to 70 °C) 24/48/60 V DC/; 5 V DC/10 A, 24 V DC/1 A	**6ES7405-0KR02-0AA1**
• **20 A** 24/48/60 V DC; 5 V DC/20 A, 24 V DC/1 A; with battery compartment for 2 backup batteries, module occupies 2 slots	**6ES7405-0RA02-0AA0**
Backup battery for PS 405/407, type AA, 3.6 V, 2.3 Ah	**6ES7971-0BA00**
XTR backup battery for PS 405/407, type AA, 3.6 V, 2.3 Ah; for operating temperature up to 70 °C	**6ES7971-0BA02**
Aluminum rack	
• UR1, 18 slots	**6ES7400-1TA11-0AA0**
• UR2 XTR, 9 slots (conformal coating; for operating temperature up to 70 °C)	**6ES7400-1JA11-0AA1**
• UR2-H XTR, for divided central controllers; 2 × 9 slots (conformal coating; for operating temperature up to 70 °C)	**6ES7400-2JA10-0AA1**
• CR3 XTR, 4 slots (conformal coating; for operating temperature up to 70 °C)	**6ES7401-1DA01-0AA1**
Steel rack	
• UR1, 18 slots	**6ES7400-1TA01-0AA0**
• UR2, 9 slots	**6ES7400-1JA01-0AA0**
• UR2-H, for divided central controllers; 2 × 9 slots	**6ES7400-2JA00-0AA0**

	Article No.
Runtime licenses for SIMATIC PCS 7 automation systems (can be added to existing licenses)	
SIMATIC PCS 7 AS Runtime license Language-neutral, floating license for 1 user	
No SIMATIC PCS 7 Software Media Package	
• Physical delivery License key on USB flash drive, certificate of license	
- 100 POs	**6ES7653-2BA00-0XB5**
- 1 000 POs	**6ES7653-2BB00-0XB5**
- 10 000 POs	**6ES7653-2BC00-0XB5**
• Online delivery License key download, online certificate of license Note: Email address required!	
- 100 POs	**6ES7653-2BA00-0XH5**
- 1 000 POs	**6ES7653-2BB00-0XH5**
- 10 000 POs	**6ES7653-2BC00-0XH5**
Y-Link	
Y-Link For connection of devices with only 1 PROFIBUS DP interface to a redundant automation system	**6ES7197-1LA12-0XA0**

Options

Y-Link

- Bus coupler for transition from a redundant PROFIBUS DP master system to a single-channel PROFIBUS DP master system
- For connection of devices with only one PROFIBUS DP interface to the redundant PROFIBUS DP master system

The Y-link comprises:

- 2 IM 153-2 High Feature Outdoor high feature interface modules
- One Y coupler including RS 485 repeater
- One BM IM/IM bus module for two IM 153-2 High Feature Outdoor modules
- One BM Y coupler bus module

Evaluation of the Y-Link diagnostics (and hence indirectly of the connected DP standard slaves) is supported by driver blocks.

Overview

AS Single Station AS 410F

Safety-related automation systems are used for critical applications where a fault could endanger life or result in damage to the plant or the environment. These F/FH systems also referred to as "fail-safe automation systems" detect both faults in the process and their own internal faults in association with the safety-related F modules of the ET 200 distributed I/O systems or fail-safe transmitters connected directly via the fieldbus. They automatically transfer the plant to a safe state in the event of a fault.

Design

The PROFIsafe profile allows safety-related communication between the automation system (controller) and the process I/O via both PROFIBUS and PROFINET. The decision for choosing either PROFINET IO or the PROFIBUS DP/PA fieldbuses has a significant influence on the architecture of the safety-related system.

For information on the safety-related design versions with PROFIBUS DP/PA and PROFINET IO, refer to the section "Safety Integrated for Process Automation", "Introduction", page 14/2.

The safety-related SIMATIC PCS 7 automation systems are based either on the hardware of the AS 410S standard automation system (F systems) or the hardware of the AS 410H high availability automation system (FH systems), which have been supplemented with safety functions using S7 F systems.

In accordance with the design variant, they are categorized as:

- **AS Single Station AS 410F** with only one CPU (safety-related)
- **AS Redundancy Station AS 410FH** with two redundant CPUs (safety-related and high availability)

The availability can be flexibly increased with a redundant design for the power supply or the Industrial Ethernet communications module (for details, see the section "Modular S7-400 systems" under "Flexible and scalable availability", page 8/5).

All AS 410F/FH systems are TÜV-certified and comply with the safety requirements up to SIL 3 according to IEC 61508.

In these systems with multitasking capability, several programs can be executed simultaneously in one CPU – basic process control (BPCS) applications or also safety-related applications. The programs are reaction-free, i.e. faults in BPCS applications have no effect on safety-related applications, and vice versa. Special tasks with very short response times can also be implemented.

The redundant FH systems operating according to the 1-out-of-2 principle consist of two subsystems of identical design. These are electrically isolated from each other to achieve optimum EMC, and are synchronized with each other via fiber-optic cables. In case of an error, there is a bumpless switchover from the active subsystem to the reserve system. The two subsystems can be present in the same rack or separated by up to 10 km. The spatial separation provides additional security in the case of extreme influences in the environment of the active subsystem, e.g. resulting from a fire.

The redundancy of the FH systems is only used to increase the availability. It is not relevant to processing of the safety functions and the associated fault detection.

Individual configuration of AS bundles

Configuration of the safety-related automation systems as well as the Article No.'s can be defined by selecting pre-configured ordering units.

Typical combinations for the respective system can be selected using tables in the "Ordering data" section. These are divided into:

- AS Single Station AS 410F with one CPU
- AS Redundancy Station AS 410FH with two redundant CPUs, mounted on one common rack (UR2-H) or two separate racks (UR2)

The complete range for selection is available using two correspondingly structured online configurators in the Industry Mall:

- SIMATIC PCS 7 AS 410 Single Station configurator
- SIMATIC PCS 7 AS 410 Redundancy Station configurator

System expansion cards including an S7 F systems Runtime license should be selected here for safety-related AS 410 F/FH automation systems.

FO sync cables longer than 1 m must always be ordered separately (2 cables required in each case).

The components suitable for engineering the safety-related applications can be ordered in the section "Safety Integrated for Process Automation":

- S7 F Systems
  F programming tool with F block library for programming safety-related user programs on the engineering system
- SIMATIC Safety Matrix
  Convenient safety lifecycle tool for configuration, operation and servicing

Design (continued)

Subsequent increase in performance

If the performance limit defined by the ordered system expansion card is reached during configuration, commissioning or operation, a subsequent increase in performance is possible by using an appropriate number of CPU 410 Expansion Packs 100 POs/500 POs. Hardware modifications are not necessary.

I/O connection via PROFIBUS DP

The distributed process I/O can be integrated into a PROFIBUS DP segment either directly or via a lower-level PROFIBUS PA fieldbus. Several PROFIBUS DP segments with distributed process I/Os can be operated on an AS 410F/FH automation system.

A PROFIBUS DP interface is already integrated in each CPU 410-5H Process Automation. Using the online configurator in the Industry Mall or in the Ordering data, up to four additional PROFIBUS DP interfaces can be configured with additive CP 443-5 PROFIBUS DP interfaces (conformal coating) for each AS 410F as well as for each subsystem of the AS 410FH.

Connection of the process I/Os to two redundant PROFIBUS DP lines of an FH system (AS Redundancy Station) is carried out as described in the section "High Availability automation systems".

The FOUNDATION Fieldbus (FF) H1 and the FF devices are not supported by Safety Integrated for Process Automation.

I/O connection via PROFINET IO

Safety-related AS 410F/FH automation systems can be connected via PROFINET IO with remote I/O stations, for example, ET 200M or ET 200SP remote I/O stations. Only the two PROFINET interfaces (2-port switches) integrated in the CPU can be used for this on the automation system. You can find more information in the section "Safety Integrated for Process Automation", "Introduction", page 14/2.

Communication over the plant bus

If the PROFINET interfaces integrated in the CPU of the safety-related automation systems are not used for PROFINET IO, they are then available for connection to the Industrial Ethernet plant bus. Otherwise, the AS 410F and the two subsystems of the AS 410FH can be connected to the plant bus via one CP 443-1 (conformal coating) communication module each.

The plant bus can be implemented in the form of a ring structure, which can also be configured with redundant architecture if the availability requirements are high. When there are two redundant rings, it makes sense to configure two IE interface/communication modules per AS (AS 410F) or AS subsystem (AS 410FH) and to distribute their connections over the two rings (4-way connection). Double faults such as failure of the switch on ring 1 with simultaneous interruption of the bus cable on ring 2 can thus be tolerated.

Runtime licenses

Safety-related automation systems come furnished with the SIMATIC PCS 7 AS Runtime license for 100 process objects (PO) and the S7 F Systems RT license. The 100 POs of the SIMATIC PCS 7 AS Runtime license can be expanded by additional Runtime licenses for 100, 1 000 or 10 000 POs. The process objects of additional Runtime licenses can be added to process objects which already exist. The number and type (e.g. 100 or 1000) of additional Runtime licenses are irrelevant.

Ordering data

	Article No.								
AS 410F (Single Station) CPU 410-5H with PROFIBUS DP and PROFINET IO interface 32 MB RAM (16 MB each for program and data) with SIMATIC PCS 7 AS Runtime license for 100 POs	**6ES7654-**								
	■	C	■	0	■	-	■	■ F	■
Type of delivery									
• Individual components, not pre-assembled	5								
• Pre-assembled and tested	6								
System expansion card									
• System expansion card 100 POs including S7 F systems runtime license			A						
• System expansion card 500 POs including S7 F systems runtime license			C						
• System expansion card 1 000 POs including S7 F systems runtime license			E						
• System expansion card 1 600 POs including S7 F Systems Runtime license			F						
• System expansion card PO 2k+ (≥ 2 000) including S7 F systems runtime license			G						
• System expansion card 0 PO (blank) including S7 F Systems Runtime license			H						
Additive Industrial Ethernet interfaces[1]									
• Without CP 443-1					0				
• 1 × CP 443-1[2]					3				
• 2 × CP 443-1[2]					4				
Racks									
• UR2 (9 slots), aluminum[1)2)]						3			
• UR2 (9 slots), steel[1]						4			
• UR1 (18 slots), aluminum						5			
• UR1 (18 slots), steel						6			
• CR3 (4 slots), aluminum[2)3)]						7			
Power supply (without backup batteries)									
• 1 × PS 407, 4 A for 120/230 V AC/DC[2]							A		
• 1 × PS 407, 10 A for 120/230 V AC/DC							B		
• 1 × PS 407, 10 A for 120/230 V AC/DC, optional redundancy[2]							C		
• 1 × PS 407, 20 A for 120/230 V AC/DC							D		
• 2 × PS 407, 10 A for 120/230 V AC/DC, redundant[2]							E		
• 1 × PS 405, 4 A for 24 V DC[2]							F		
• 1 × PS 405, 10 A for 24 V DC							G		
• 1 × PS 405, 10 A for 24 V DC, optional redundancy[2]							H		
• 1 × PS 405, 20 A for 24 V DC							J		
• 2 × PS 405, 10 A for 24 V DC, redundant[2]							K		
Additive PROFIBUS DP interfaces[1]									
• Without CP 443-5 Extended									0
• 1 × CP 443-5 Extended[2]									1
• 2 × CP 443-5 Extended[2]									2
• 3 × CP 443-5 Extended[2]									3
• 4 × CP 443-5 Extended[2]									4

[1] Up to 5 CPs (Industrial Ethernet/PROFIBUS) can be plugged into the UR2 rack with a single power supply, or up to 3 with a redundant power supply.

[2] Conformal coating

[3] Only in conjunction with 4 A power supplies

	Article No.								
AS 410FH (Redundancy Station) 2 × CPU 410-5H with PROFIBUS DP and PROFINET IO interface 32 MB RAM (16 MB each for program and data) with SIMATIC PCS 7 AS Runtime license for 100 POs	**6ES7656-**								
	■	C	■	■	■	-	■	■ F	■
Type of delivery									
• Individual components, not pre-assembled	5								
• Pre-assembled and tested	6								
System expansion card									
• 2 × System expansion card 100 POs including S7 F systems runtime license			A						
• 2 × system expansion card 500 POs including S7 F systems runtime license			C						
• 2 × system expansion card 1 000 POs including S7 F Systems Runtime license			E						
• 2 × System expansion card 1 600 POs including S7 F systems runtime license			F						
• 2 × System expansion card PO 2k+ (≥ 2 000) including S7 F Systems Runtime license			G						
• 2 × System expansion card 0 PO (blank) including S7 F Systems Runtime license			H						
Sync modules and cables									
• 2 × 2 sync modules[2] for distances up to 10 m and 2 × FO sync cable, 1 m				3					
• 2 × 2 sync modules for up to 10 km and 2 × FO sync cable, 1 m, for testing				4					
Additive Industrial Ethernet interfaces[1]									
• Without CP 443-1					0				
• 2 × 1 CP 443-1[2]					3				
• 2 × 2 CP 443-1[2]					4				
Racks									
• 1 × UR2-H (2 × 9 slots), aluminum[1)2)]							1		
• 1 × UR2-H (2 × 9 slots), steel[1]							2		
• 2 × UR2 (9 slots), aluminum[1)2)]							3		
• 2 × UR2 (9 slots), steel[1]							4		
• 2 x CR3 (4 slots), aluminum[2)3)]							7		
Power supply (without backup batteries)									
• 2 × PS 407, 4 A for 120/230 V AC/DC[2]								A	
• 2 × PS 407, 10 A for 120/230 V AC/DC								B	
• 2 × PS 407, 10 A for 120/230 V AC/DC, optional redundancy[2]								C	
• 2 × PS 407, 20 A for 120/230 V AC/DC								D	
• 2 × 2 PS 407, 10 A for 120/230 V AC/DC, redundant[2]								E	
• 2 × PS 405, 4 A for 24 V DC[2]								F	
• 2 × PS 405, 10 A for 24 V DC								G	
• 2 × PS 405, 10 A for 24 V DC, optional redundancy[2]								H	
• 2 × PS 405, 20 A for 24 V DC								J	
• 2 × 2 PS 405, 10 A for 24 V DC, redundant[2]								K	
Additive PROFIBUS DP interfaces[1]									
• Without CP 443-5 Extended									0
• 2 × 1 CP 443-5 Extended[2]									1
• 2 × 2 CP 443-5 Extended[2]									2
• 2 × 3 CP 443-5 Extended[2]									3
• 2 × 4 CP 443-5 Extended[2]									4

[1] In configurations with UR2/UR2-H racks, up to 5 CPs (Industrial Ethernet/PROFIBUS) can be configured with a single power supply per subsystem, or up to 3 CPs per subsystem with a redundant power supply.

[2] Conformal coating

[3] Only in conjunction with 4 A power supplies

Ordering data (continued)

Safety-related automation systems for the expanded temperature range (XTR)

	Article No.								
AS 410F (Single Station) CPU 410-5H with PROFIBUS DP and PROFINET IO interface 32 MB RAM (16 MB each for program and data) with SIMATIC PCS 7 AS Runtime license for 100 POs	**6ES7654-**								
	■	C	■	0	■	-	■	■	F	■
Type of delivery										
• Individual components, not pre-assembled	5									
• Pre-assembled and tested	6									
System expansion card										
• System expansion card 100 POs including S7 F systems runtime license			A							
• System expansion card 500 POs including S7 F systems runtime license			C							
• System expansion card 1 000 POs including S7 F systems runtime license			E							
• System expansion card 1 600 POs including S7 F Systems Runtime license			F							
• System expansion card PO 2k+ (≥ 2 000) including S7 F systems runtime license			G							
• System expansion card 0 PO (blank) including S7 F Systems Runtime license			H							
Additive Industrial Ethernet interfaces										
• Without CP 443-1					0					
Racks										
• UR2 XTR (9 slots), aluminum[1]							3			
• CR3 XTR, 4 slots, aluminum[2]							7			
Power supply (without backup batteries)										
• 1 × PS 407, 4 A XTR for 120/230 V AC/DC								A		
• 1 × PS 407, 10 A XTR for 120/230 V AC/DC, optional redundancy								C		
• 2 × PS 407, 10 A XTR for 120/230 V AC/DC, redundant								E		
• 1 × PS 405, 4 A XTR for 24 V DC								F		
• 1 × PS 405, 10 A XTR for 24 V DC, optional redundancy								H		
• 2 × PS 405, 10 A XTR for 24 V DC, redundant								K		
Additive PROFIBUS DP interfaces										
• Without CP 443-5 Extended										0

[1] Only in conjunction with 10 A power supplies
[2] Only in conjunction with 4 A power supplies

	Article No.									
AS 410FH (Redundancy Station) 2 × CPU 410-5H with PROFIBUS DP and PROFINET IO interface 32 MB RAM (16 MB each for program and data) with SIMATIC PCS 7 AS Runtime license for 100 POs	**6ES7656-**									
	■	C	■	■	■	-	■	■	F	■
Type of delivery										
• Individual components, not pre-assembled	5									
• Pre-assembled and tested	6									
System expansion card										
• 2 × System expansion card 100 POs including S7 F systems runtime license			A							
• 2 × system expansion card 500 POs including S7 F systems runtime license			C							
• 2 × system expansion card 1 000 POs including S7 F Systems Runtime license			E							
• 2 × System expansion card 1 600 POs including S7 F systems runtime license			F							
• 2 × System expansion card PO 2k+ (≥ 2 000) including S7 F Systems Runtime license			G							
• 2 × System expansion card 0 PO (blank) including S7 F Systems Runtime license			H							
Sync modules and cables										
• 2 × 2 sync modules V8 XTR for distances up to 10 m and 2 × FO sync cable, 1 m				3						
Additive Industrial Ethernet interfaces										
• Without CP 443-1					0					
Racks										
• 1 × UR2-H XTR (2 × 9 slots), aluminum[1]							1			
• 2 × UR2 XTR (9 slots), aluminum[1]							3			
• 2 × CR3 XTR, 4 slots, aluminum[2]							7			
Power supply (without backup batteries)										
• 2 × PS 407, 4 A XTR for 120/230 V AC/DC								A		
• 2 × PS 407, 10 A XTR for 120/230 V AC/DC, optional redundancy								C		
• 2 × 2 PS 407, 10 A XTR for 120/230 V AC/DC, redundant								E		
• 2 × PS 405, 4 A XTR for 24 V DC								F		
• 2 × PS 405, 10 A XTR for 24 V DC, optional redundancy								H		
• 2 × 2 PS 405, 10 A XTR for 24 V DC, redundant								K		
Additive PROFIBUS DP interfaces										
• Without CP 443-5 Extended										0

[1] Only in conjunction with 10 A power supplies
[2] Only in conjunction with 4 A power supplies

Ordering data

Individual components

	Article No.
Individual components of the safety-related SIMATIC PCS 7 AS 410F and AS 410FH automation systems	
S7 F Systems RT License For processing safety-related user programs, for one AS 410F/FH system each	**6ES7833-1CC00-6YX0**
CPU 410-5H Process Automation as spare part Conformal coating; for operating temperature up to 70 °C 32 MB RAM integrated (16 MB each for program and data); module occupies 2 slots	**6ES7410-5HX08-0AB0**
CPU 410-5H Process Automation 100 PO Bundle CPU bundle, consisting of CPU 410-5H Process Automation and PCS 7 system expansion card for 100 PO	**6ES7654-5CJ00-0XF0**
CPU 410-5H Process Automation 500 PO Bundle CPU bundle, consisting of CPU 410-5H Process Automation and PCS 7 system expansion card for 500 PO	**6ES7654-5CL00-0XF0**
CPU 410-5H Process Automation 1 000 PO Bundle CPU bundle, consisting of CPU 410-5H Process Automation and PCS 7 system expansion card for 1 000 PO	**6ES7654-5CN00-0XF0**
CPU 410-5H Process Automation 1 600 PO Bundle CPU bundle, consisting of CPU 410-5H Process Automation and PCS 7 system expansion card for 1 600 PO	**6ES7654-5CP00-0XF0**
CPU 410-5H Process Automation PO 2k+ Bundle CPU bundle, consisting of CPU 410-5H Process Automation and PCS 7 system expansion card for PO 2k+ (≥ 2 000)	**6ES7654-5CQ00-0XF0**
CPU 410 expansion pack For subsequent increase in performance of the CPU 410-5H process automation Upgrade option for 1 installation, independent of language No SIMATIC PCS 7 Software Media Package	
• Physical delivery License key on USB flash drive, certificate of license	
- 100 POs	**6ES7653-2CA00-0XE0**
- 500 POs	**6ES7653-2CC00-0XE0**
• Online delivery License key download, online certificate of license Note: Email address required!	
- 100 POs	**6ES7653-2CA00-0XK0**
- 500 POs	**6ES7653-2CC00-0XK0**

	Article No.
Sync set For coupling two redundant CPUs; for distances up to	
• 10 m, consisting of 4 sync modules for up to 10 m and 2 fiber-optic sync cables, 1 m each	**6ES7656-7XX30-0XE0**
• 10 km, consisting of 4 sync modules for up to 10 km Note: please order fiber-optic sync cables (2 units) in the required length separately.	**6ES7656-7XX40-0XE0**
Sync module For coupling two redundant CPUs; 2 modules required for each CPU, for distances up to	
• 10 m	**6ES7960-1AA06-0XA0**
• 10 km	**6ES7960-1AB06-0XA0**
Sync module V8 XTR (Conformal coating; for operating temperature up to 70 °C) For coupling two redundant CPUs; 2 modules required for each CPU; for distances up to 10 m	**6ES7960-1AA08-0XA0**
Sync cable (fiber-optic cable) For connecting two redundant CPUs, 2 cables required for each redundant automation system	
• 1 m	**6ES7960-1AA04-5AA0**
• 2 m	**6ES7960-1AA04-5BA0**
• 10 m	**6ES7960-1AA04-5KA0**
Other lengths	On request
SIMATIC NET CP 443-1 (conformal coating) Communication module for connecting SIMATIC S7-400 to Industrial Ethernet through TCP/IP, ISO and UDP; PROFINET IO controller, MRP; integrated real-time switch ERTEC with 2 ports; 2 x RJ45 interface; S7 communication, open communication (SEND/RECEIVE) with FETCH/WRITE, with or without RFC 1006, DHCP, SNMP V2, diagnostics, multicast, access protection over IP access list, initialization over LAN 10/100 Mbit/s; with electronic manual on DVD	**6GK7443-1EX30-0XE1**
SIMATIC NET CP 443-5 Extended (conformal coating) Communication module for connection of SIMATIC S7-400 to PROFIBUS as DP master or for S7 communication, for increasing the number of DP lines, for data set routing with SIMATIC PDM and for 10-ms time stamp, electronic manual on CD; module occupies 1 slot	**6GK7443-5DX05-0XE1**

8

Ordering data

	Article No.
PS 407 power supply module with battery compartment for 2 backup batteries, module occupies 2 slots	
• **4 A XTR** (conformal coating; for operating temperature up to 70 °C) 120/230 V UC; 5 V DC/4 A, 24 V DC/0.5 A	**6ES7407-0DA02-0AA1**
• **10 A** 120/230 V AC/DC; 5 V DC/10 A, 24 V DC/1 A	**6ES7407-0KA02-0AA0**
• **10 A XTR, optional redundancy** (conformal coating; for operating temperature up to 70 °C) 120/230 V UC/; 5 V DC/10 A, 24 V DC/1 A	**6ES7407-0KR02-0AA1**
• **20 A** 120/230 V AC/DC; 5 V DC/20 A, 24 V DC/1 A	**6ES7407-0RA02-0AA0**
PS 405 power supply module with battery compartment for 2 backup batteries, module occupies 2 slots	
• **4 A XTR** (conformal coating; for operating temperature up to 70 °C) 24/48/60 V DC; 5 V DC/4 A, 24 V DC/0.5 A	**6ES7405-0DA02-0AA1**
• **10 A** 24/48/60 V DC; 5 V DC/10 A, 24 V DC/1 A	**6ES7405-0KA02-0AA0**
• **10 A XTR, optional redundancy** (conformal coating; for operating temperature up to 70 °C) 24/48/60 V DC/; 5 V DC/10 A, 24 V DC/1 A	**6ES7405-0KR02-0AA1**
• **20 A** 24/48/60 V DC; 5 V DC/20 A, 24 V DC/1 A; with battery compartment for 2 backup batteries, module occupies 2 slots	**6ES7405-0RA02-0AA0**
Backup battery for PS 405/407, type AA, 3.6 V, 2.3 Ah	**6ES7971-0BA00**
XTR backup battery for PS 405/407, type AA, 3.6 V, 2.3 Ah; for operating temperature up to 70 °C	**6ES7971-0BA02**
Aluminum rack	
• UR1, 18 slots	**6ES7400-1TA11-0AA0**
• UR2 XTR, 9 slots (conformal coating; for operating temperature up to 70 °C)	**6ES7400-1JA11-0AA1**
• UR2-H XTR, for divided central controllers; 2 × 9 slots (conformal coating; for operating temperature up to 70 °C)	**6ES7400-2JA10-0AA1**
• CR3 XTR, 4 slots (conformal coating; for operating temperature up to 70 °C)	**6ES7401-1DA01-0AA1**
Steel rack	
• UR1, 18 slots	**6ES7400-1TA01-0AA0**
• UR2, 9 slots	**6ES7400-1JA01-0AA0**
• UR2-H, for divided central controllers; 2 × 9 slots	**6ES7400-2JA00-0AA0**

	Article No.
Runtime licenses for SIMATIC PCS 7 automation systems (can be added to existing licenses)	
SIMATIC PCS 7 AS Runtime license Language-neutral, floating license for 1 user	
No SIMATIC PCS 7 Software Media Package	
• Physical delivery License key on USB flash drive, certificate of license	
- 100 POs	**6ES7653-2BA00-0XB5**
- 1 000 POs	**6ES7653-2BB00-0XB5**
- 10 000 POs	**6ES7653-2BC00-0XB5**
• Online delivery License key download, online certificate of license Note: Email address required!	
- 100 POs	**6ES7653-2BA00-0XH5**
- 1 000 POs	**6ES7653-2BB00-0XH5**
- 10 000 POs	**6ES7653-2BC00-0XH5**
AS 410F/FH Engineering See section "Safety Integrated for Process Automation", S7 F Systems, page 14/5	
Y-Link	
Y-Link For connection of devices with only one PROFIBUS DP interface to a redundant automation system	**6ES7197-1LA12-0XA0**

Overview

With the S7-400 automation systems, which are scalable via different types of CPU, you have an alternative to AS 410 automation systems. The systems that can be used in plants with SIMATIC PCS 7 V7/V8 can be classified as follows:

- Standard automation systems
- High Availability automation systems
- Safety-related automation systems

Standard automation systems

The AS 414-3, AS 414-3IE, AS 416-2, AS 416-3, AS 416-3IE and AS 417-4 standard automation systems are extremely robust and feature high processing and communication performance.

The AS 414-3 and AS 414-3IE are tailored for smaller-scale applications with smaller quantity structures. This allows for a low-cost starter solution with a modular and scalable system based on the S7-400 controller range. Larger quantity frameworks can be implemented with the AS 416-2, AS416-3/416-3IE and AS 417-4 automation systems. These systems are preferred for medium and large-sized plants.

High Availability automation systems

The aim in using high availability automation systems is to minimize the risk of a production outage. In accordance with their basic design, these systems are categorized as:

- AS Single Stations: AS 412-5-1H, AS 414-5-1H, AS 416-5-1H, and AS 417-5-1H with only one CPU, e.g. for the following applications:
  - Subsequent expansion to a redundant system
  - Redundant configuration on UR1 racks, comprising 2 single stations, 4 sync modules, and 2 sync fiber-optic cables
- AS Redundancy Stations: AS 412-5-2H, AS 414-5-2H, AS 416-5-2H and AS 417-5-2H with two redundant CPUs, mounted on one common rack (UR2-H) or two separate racks (UR2)

Safety-related automation systems

Safety-related automation systems (F/FH systems) are available for safety-relevant applications in which an incident can result in danger to persons, plant damage or environmental pollution. These are based on the hardware of the high availability automation systems, which is expanded by safety functions with S7 F systems.

In accordance with the design variant, they are categorized as:

- **AS Single Stations**
  AS 412F, AS 414F, AS 416F, and AS 417F with only one CPU (safety-related)
- **AS Redundancy Stations**
  AS 412FH, AS 414FH, AS 416FH, and AS 417FH with two redundant CPUs (safety-related and high availability)

The safety-related F/FH systems collaborate with safety-related F modules of the ET 200 distributed I/O systems or fail-safe transmitters connected directly via the fieldbus to detect not only faults in the process, but also their own, internal faults. They automatically transfer the plant to a safe state in the event of a fault. The redundancy of the FH systems is only used to increase the availability. It is not relevant to processing of the safety functions and the associated fault detection.

All F/FH systems are TÜV-certified and comply with the safety requirements up to SIL 3 according to IEC 61508.

Design

Racks

Automation systems based on only one CPU (AS Single Station) can be mounted on a UR1 rack (18 slots) or UR2 rack (9 slots).

The automation systems (AS Redundancy Station) consisting of two electrically isolated redundant subsystems can be mounted on a UR2-H compact rack with divided backplane bus or on two separate racks (UR1 or UR2). The design with two racks allows physical separation of the redundant subsystems, e.g. by a fireproof partition and over a distance of up to 10 km. As a result of the galvanic isolation, the system is insensitive to electromagnetic interferences.

Redundant power supply

If you have two separate power supply networks for your system, you can increase the availability of the automation systems with redundant power supplies (2 power supplies for one AS Single Station or 1 or 2 power supplies for each subsystem of an AS Redundancy Station).

Communication via the Industrial Ethernet (IE) plant bus

Each standard automation system is connected to the Industrial Ethernet plant bus by means of a CP 443-1 communication module.

If the PN/IE interfaces integrated in the CPUs of the high availability and safety-related automation systems are not used for PROFINET IO, they can then also be used for the connection to the Industrial Ethernet plant bus. Otherwise, the 1H/F systems (AS Single Station) and the two subsystems of the 2H/FH systems (AS Redundancy Station) can be connected to the plant bus via one CP 443-1 communication module each.

I/O connection via PROFIBUS DP

The distributed process I/O can be integrated into a PROFIBUS DP segment either directly or via a lower-level fieldbus (PROFIBUS PA or FOUNDATION Fieldbus H1).

Several PROFIBUS DP segments with distributed process I/O can be operated on a standard automation system, an 1H/F system (AS Single Station), or a 2H/FH system (AS Redundancy Station). The following table provides an overview of the number and type of configurable PROFIBUS DP interfaces.

Design (continued)

AS type	PROFIBUS interfaces							
	1	2	3	4	5	6	7	8
AS 412-5-1H/AS 412F	MPI/DP	DP	CP	CP	CP	CP		
AS 412-5-2H/AS 412FH	MPI/DP	DP	CP	CP	CP	CP		
AS 414-5-1H/AS 414F	MPI/DP	DP	CP	CP	CP	CP		
AS 414-5-2H/AS 414FH	MPI/DP	DP	CP	CP	CP	CP		
AS 416-5-1H/AS 416F	MPI/DP	DP	CP	CP	CP	CP		
AS 416-5-2H/AS 416FH	MPI/DP	DP	CP	CP	CP	CP		
AS 417-5-1H/AS 417F	MPI/DP	DP	CP	CP	CP	CP		
AS 417-5-2H/AS 417FH	MPI/DP	DP	CP	CP	CP	CP		
AS 416-2	MPI/DP	DP	CP	CP	CP	CP		
AS 414-3IE	MPI/DP	IF	CP	CP	CP	CP		
AS 416-3IE	MPI/DP	IF	CP	CP	CP	CP		
AS 414-3	MPI/DP	DP	IF	CP	CP	CP	CP	
AS 416-3	MPI/DP	DP	IF	CP	CP	CP	CP	
AS 417-4	MPI/DP	DP	IF	IF	CP	CP	CP	CP

Overview of number and type of configurable PROFIBUS interfaces

MPI/DP = Integrated MPI/DP interface (for up to 32 PROFIBUS DP nodes)

DP = Integrated PROFIBUS DP interface
IF = Optional PROFIBUS DP interface module
CP = Additive CP 443-5 Extended PROFIBUS DP interface

I/O connection via PROFINET (PN)

Standard automation systems, high availability and safety-oriented automation systems (AS Single Stations and AS Redundancy Stations) can be networked simply and effectively with ET 200M remote I/O stations over PROFINET IO. If a PN/IE interface is integrated in the CPU of the automation system (AS 414-3IE, AS 416-3IE, and all H/F/FH systems), then it is to be used for connecting ET 200M remote I/O stations via PROFINET IO. In standard automation systems, the PN/IE interfaces of type CP 443-1 communication modules can also be used for PROFINET IO.

The maximum availability with minimum error handling times is achieved by the AS Redundancy Station (2 H/FH systems) in conjunction with the system redundancy of the I/O devices. System redundancy refers to a type of PROFINET IO communication where each I/O device establishes a communication connection to each of the two CPUs of an AS Redundancy Station over the topological network.

Runtime licenses

Each automation system comes furnished with the SIMATIC PCS 7 AS Runtime license for 100 process objects (PO). Safety-related automation systems are additionally furnished with the S7 F Systems RT license. The 100 POs of the SIMATIC PCS 7 AS Runtime license can be expanded by additional Runtime licenses for 100, 1 000 or 10 000 POs. The process objects of additional Runtime licenses can be added to process objects which already exist. The number and type (e.g. 100 or 1000) of additional Runtime licenses are irrelevant.

Individual configuration of AS bundles

The various versions of the SIMATIC PCS 7 automation systems AS 412 to AS 417 are available as AS bundles as follows:

- Individual components, combined per station in one consignment
- Preassembled and tested complete systems (no extra charge compared to delivery of individual components)

Typical combinations can be selected from tables in the section "Ordering data".

The complete range is available to you via two configurators in the Industry Mall:

- SIMATIC PCS 7 AS Single Station configurator
- SIMATIC PCS 7 AS Redundancy Station configurator

Ordering information

- For a redundant configuration based on 2 AS Single Stations, you additionally require 4 sync modules (up to 10 m or 10 km) and 2 fiber-optic sync cables. The selection depends on the distance between the two AS Single Stations.
- FO sync cables longer than 1 m must always be ordered separately (2 cables required in each case).

Accessories

Backup batteries

Lithium backup batteries of type AA with 2.3 Ah are used in the power supply modules of all SIMATIC PCS 7 automation systems AS 412 to AS 417. Since lithium batteries are easily inflammable, more rigorous transport and storage regulations apply to them.

To avoid subjecting the AS bundles to these more rigorous transport and storage regulations, the backup batteries must be ordered and delivered separately (Article No. 6ES7971-0BA00).

The following backup batteries are required depending on the configuration of the AS bundles:

- SIMATIC PCS 7 AS Single Station:
  - With 1 power supply module: 2 units
  - With 2 redundant power supply modules: 4 units
- SIMATIC PCS 7 AS Redundancy Station:
  - With 2 power supply modules: 4 units
  - With 2 x 2 redundant power supply modules: 8 units

Ordering data

Configuration tables for standard automation systems

	Article No.								
AS 414-3 with SIMATIC PCS 7 AS Runtime license for 100 POs	**6ES7654-**								
	■	■	■	■	■	-	■	■ G	■
CPU with 3 interfaces (MPI/DP and slot for IF module) 4 MB RAM (2 MB each for program and data)									
Type of delivery									
• Individual components, not pre-assembled	7								
• Pre-assembled and tested	8								
Memory card									
• Memory card 2 MB RAM (up to approx. 100 POs)		B							
• Memory card 4 MB RAM (up to approx. 210 POs)		C							
• Memory card 8 MB RAM (up to approx. 800 POs)		D							
CPU type									
• CPU 414-3 (up to approx. 450 POs)			C						
Additive IF 964-DP interface module									
• Without additive IF 964-DP				0					
• 1 × IF 964-DP				1					
Interface to Industrial Ethernet/PROFINET plant bus									
• 1 × CP 443-1EX30					3				
• 2 × CP 443-1EX30					4				
Racks									
• UR2 (9 slots), aluminum							3		
• UR2 (9 slots), steel							4		
• UR1 (18 slots), aluminum							5		
• UR1 (18 slots), steel							6		
Power supply (without backup batteries)									
• 1 × PS 407, 10 A for 120/230 V AC/DC								B	
• 1 × PS 407, 10 A for 120/230 V AC/DC, optional redundancy								C	
• 1 × PS 407, 20 A for 120/230 V AC/DC								D	
• 2 × PS 407, 10 A for 120/230 V AC/DC, optional redundancy								E	
• 1 × PS 405, 10 A for 24 V DC								G	
• 1 × PS 405, 10 A for 24 V DC, optional redundancy								H	
• 1 × PS 405, 20 A for 24 V DC								J	
• 2 × PS 405, 10 A for 24 V DC, optional redundancy								K	
Additive PROFIBUS DP interfaces									
• Without CP 443-5 Extended									0
• 1 × CP 443-5 Extended									1
• 2 × CP 443-5 Extended									2
• 3 × CP 443-5 Extended[1)]									3
• 4 × CP 443-5 Extended[1)]									4

[1)] With the UR2 rack in combination with a redundant power supply, the number of additive CP 443-5 Extended is limited to 2.

	Article No.								
AS 416-2 with SIMATIC PCS 7 AS Runtime license for 100 POs	**6ES7654-**								
	■	■	■	■	■	-	■	■ G	■
CPU with 2 interfaces (MPI/DP and DP) 8 MB RAM (4 MB each for program and data)									
Type of delivery									
• Individual components, not pre-assembled	7								
• Pre-assembled and tested	8								
Memory card									
• Memory card 4 MB RAM (up to approx. 210 POs)		C							
• Memory card 8 MB RAM (up to approx. 800 POs)		D							
• Memory card 16 MB RAM (up to approx. 3 000 POs)		E							
CPU type									
• CPU 416-2 (up to approx. 900 POs)			G						
Additive IF 964-DP interface module									
• Without additive IF 964-DP				0					
Interface to Industrial Ethernet/PROFINET plant bus									
• 1 × CP 443-1EX30					3				
• 2 × CP 443-1EX30					4				
Racks									
• UR2 (9 slots), aluminum							3		
• UR2 (9 slots), steel							4		
• UR1 (18 slots), aluminum							5		
• UR1 (18 slots), steel							6		
Power supply (without backup batteries)									
• 1 × PS 407, 10 A for 120/230 V AC/DC								B	
• 1 × PS 407, 10 A for 120/230 V AC/DC, optional redundancy								C	
• 1 × PS 407, 20 A for 120/230 V AC/DC								D	
• 2 × PS 407, 10 A for 120/230 V AC/DC, optional redundancy								E	
• 1 × PS 405, 10 A for 24 V DC								G	
• 1 × PS 405, 10 A for 24 V DC, optional redundancy								H	
• 1 × PS 405, 20 A for 24 V DC								J	
• 2 × PS 405, 10 A for 24 V DC, optional redundancy								K	
Additive PROFIBUS DP interfaces									
• Without CP 443-5 Extended									0
• 1 × CP 443-5 Extended									1
• 2 × CP 443-5 Extended									2
• 3 × CP 443-5 Extended									3
• 4 × CP 443-5 Extended[1)]									4

[1)] With the UR2 rack in combination with a redundant power supply, the number of additive CP 443-5 Extended is limited to 3.

Ordering data (continued)

	Article No.								
AS 416-3 with SIMATIC PCS 7 AS Runtime license for 100 POs	**6ES7654-**								
	■	■	■	■	■	-	■	■	G	■
CPU with 3 interfaces (MPI/DP, DP and slot for IF module) 16 MB RAM (8 MB each for program and data)										
Type of delivery										
• Individual components, not pre-assembled	7									
• Pre-assembled and tested	8									
Memory card										
• Memory card 4 MB RAM (up to approx. 210 POs)		C								
• Memory card 8 MB RAM (up to approx. 800 POs)		D								
• Memory card 16 MB RAM (up to approx. 2 100 POs)		E								
CPU type										
• CPU 416-3 (up to approx. 1 500 POs)			H							
Additive IF 964-DP interface module										
• Without additive IF 964-DP				0						
• 1 × IF 964-DP				1						
Interface to Industrial Ethernet/PROFINET plant bus										
• 1 × CP 443-1EX30					3					
• 2 × CP 443-1EX30					4					
Racks										
• UR2 (9 slots), aluminum							3			
• UR2 (9 slots), steel							4			
• UR1 (18 slots), aluminum							5			
• UR1 (18 slots), steel							6			
Power supply (without backup batteries)										
• 1 × PS 407, 10 A for 120/230 V AC/DC								B		
• 1 × PS 407, 10 A for 120/230 V AC/DC, optional redundancy								C		
• 1 × PS 407, 20 A for 120/230 V AC/DC								D		
• 2 × PS 407, 10 A for 120/230 V AC/DC, optional redundancy								E		
• 1 × PS 405, 10 A for 24 V DC								G		
• 1 × PS 405, 10 A for 24 V DC, optional redundancy								H		
• 1 × PS 405, 20 A for 24 V DC								J		
• 2 × PS 405, 10 A for 24 V DC, optional redundancy								K		
Additive PROFIBUS DP interfaces										
• Without CP 443-5 Extended										0
• 1 × CP 443-5 Extended										1
• 2 × CP 443-5 Extended										2
• 3 × CP 443-5 Extended[1)]										3
• 4 × CP 443-5 Extended[1)]										4

[1)] With the UR2 rack in combination with a redundant power supply, the number of additive CP 443-5 Extended is limited to 2.

	Article No.								
AS 417-4 with SIMATIC PCS 7 AS Runtime license for 100 POs	**6ES7654-**								
	■	■	■	■	■	-	■	■	G	■
CPU with 4 interfaces (MPI/DP, DP and 2 slots for IF modules) 30 MB RAM (15 MB each for program and data)										
Type of delivery										
• Individual components, not pre-assembled	7									
• Pre-assembled and tested	8									
Memory card										
• Memory card 8 MB RAM (up to approx. 800 POs)		D								
• Memory card 16 MB RAM (up to approx. 2 100 POs)		E								
• Memory card 64 MB RAM (> 2 100 POs)		G								
CPU type										
• CPU 417-4 (up to approx. 2 200 POs)			K							
Additive IF 964-DP interface module										
• Without additive IF 964-DP				0						
• 1 × IF 964-DP				1						
• 2 × IF 964-DP				2						
Interface to Industrial Ethernet/PROFINET plant bus										
• 1 × CP 443-1EX30					3					
• 2 × CP 443-1EX30					4					
Racks										
• UR2 (9 slots), aluminum							3			
• UR2 (9 slots), steel							4			
• UR1 (18 slots), aluminum							5			
• UR1 (18 slots), steel							6			
Power supply (without backup batteries)										
• 1 × PS 407, 10 A for 120/230 V AC/DC								B		
• 1 × PS 407, 10 A for 120/230 V AC/DC, optional redundancy								C		
• 1 × PS 407, 20 A for 120/230 V AC/DC								D		
• 2 × PS 407, 10 A for 120/230 V AC/DC, optional redundancy								E		
• 1 × PS 405, 10 A for 24 V DC								G		
• 1 × PS 405, 10 A for 24 V DC, optional redundancy								H		
• 1 × PS 405, 20 A for 24 V DC								J		
• 2 × PS 405, 10 A for 24 V DC, optional redundancy								K		
Additive PROFIBUS DP interfaces										
• Without CP 443-5 Extended										0
• 1 × CP 443-5 Extended										1
• 2 × CP 443-5 Extended										2
• 3 × CP 443-5 Extended[1)]										3
• 4 × CP 443-5 Extended[1)]										4

[1)] With the UR2 rack in combination with a redundant power supply, the number of additive CP 443-5 Extended is limited to 2.

Ordering data (continued)

	Article No.								
AS 414-3IE with SIMATIC PCS 7 AS Runtime license for 100 POs	**6ES7654-**								
	■	■	■	■	■	-	■	■	G	■
CPU with 2 DP interfaces (MPI/DP and slot for IF module) 4 MB RAM (2 MB each for program and data)										
Type of delivery										
• Individual components, not pre-assembled	7									
• Pre-assembled and tested	8									
Memory card										
• Memory card 2 MB RAM (up to approx. 100 POs)		B								
• Memory card 4 MB RAM (up to approx. 210 POs)		C								
• Memory card 8 MB RAM (up to approx. 800 POs)		D								
CPU type										
• CPU 414-3 PN/DP (up to approx. 450 POs)			D							
Additive IF 964-DP interface module										
• Without additive IF 964-DP				0						
• 1 × IF 964-DP				1						
Interface to Industrial Ethernet/PROFINET plant bus										
• Integrated, without CP 443-1					0					
• 1 × CP 443-1EX30					3					
• 2 × CP 443-1EX30					4					
Racks										
• UR2 (9 slots), aluminum							3			
• UR2 (9 slots), steel							4			
• UR1 (18 slots), aluminum							5			
• UR1 (18 slots), steel							6			
Power supply (without backup batteries)										
• 1 × PS 407, 10 A for 120/230 V AC/DC								B		
• 1 × PS 407, 10 A for 120/230 V AC/DC, optional redundancy								C		
• 1 × PS 407, 20 A for 120/230 V AC/DC								D		
• 2 × PS 407, 10 A for 120/230 V AC/DC, optional redundancy								E		
• 1 × PS 405, 10 A for 24 V DC								G		
• 1 × PS 405, 10 A for 24 V DC, optional redundancy								H		
• 1 × PS 405, 20 A for 24 V DC								J		
• 2 × PS 405, 10 A for 24 V DC, optional redundancy								K		
Additive PROFIBUS DP interfaces										
• Without CP 443-5 Extended										0
• 1 × CP 443-5 Extended										1
• 2 × CP 443-5 Extended										2
• 3 × CP 443-5 Extended										3
• 4 × CP 443-5 Extended[1]										4

[1] With the UR2 rack in combination with a redundant power supply, the number of additive CP 443-5 Extended is limited to 3.

	Article No.								
AS 416-3IE with SIMATIC PCS 7 AS Runtime license for 100 POs	**6ES7654-**								
	■	■	■	■	■	-	■	■	G	■
CPU with 2 DP interfaces (MPI/DP and slot for IF module) 16 MB RAM (8 MB each for program and data)										
Type of delivery										
• Individual components, not pre-assembled	7									
• Pre-assembled and tested	8									
Memory card										
• Memory card 4 MB RAM (up to approx. 210 POs)		C								
• Memory card 8 MB RAM (up to approx. 800 POs)		D								
• Memory card 16 MB RAM (up to approx. 2 100 POs)		E								
CPU type										
• CPU 416-3 PN/DP (up to approx. 1 500 POs)			J							
Additive IF 964-DP interface module										
• Without additive IF 964-DP				0						
• 1 × IF 964-DP				1						
Interface to Industrial Ethernet/PROFINET plant bus										
• Integrated, without CP 443-1					0					
• 1 × CP 443-1EX30					3					
• 2 × CP 443-1EX30					4					
Racks										
• UR2 (9 slots), aluminum							3			
• UR2 (9 slots), steel							4			
• UR1 (18 slots), aluminum							5			
• UR1 (18 slots), steel							6			
Power supply (without backup batteries)										
• 1 × PS 407, 10 A for 120/230 V AC/DC								B		
• 1 × PS 407, 10 A for 120/230 V AC/DC, optional redundancy								C		
• 1 × PS 407, 20 A for 120/230 V AC/DC								D		
• 2 × PS 407, 10 A for 120/230 V AC/DC, optional redundancy								E		
• 1 × PS 405, 10 A for 24 V DC								G		
• 1 × PS 405, 10 A for 24 V DC, optional redundancy								H		
• 1 × PS 405, 20 A for 24 V DC								J		
• 2 × PS 405, 10 A for 24 V DC, optional redundancy								K		
Additive PROFIBUS DP interfaces										
• Without CP 443-5 Extended										0
• 1 × CP 443-5 Extended										1
• 2 × CP 443-5 Extended										2
• 3 × CP 443-5 Extended										3
• 4 × CP 443-5 Extended[1]										4

[1] With the UR2 rack in combination with a redundant power supply, the number of additive CP 443-5 Extended is limited to 3.

Ordering data

	Article No.
Individual components of standard automation systems	
CPU 414-3 RAM 4 MB (2 MB each for program and data); module occupies 2 slots	**6ES7414-3XM07-0AB0**
CPU 416-2 RAM 8 MB (4 MB each for program and data); module occupies 1 slot	**6ES7416-2XP07-0AB0**
CPU 416-3 RAM 16 MB (8 MB each for program and data); module occupies 2 slots	**6ES7416-3XS07-0AB0**
CPU 417-4 32 MB RAM integrated (16 MB each for program and data); module occupies 2 slots	**6ES7417-4XT07-0AB0**
CPU 414-3 PN/DP RAM 4 MB (2 MB each for program and data); module occupies 2 slots	**6ES7414-3EM07-0AB0**
CPU 416-3 PN/DP RAM 16 MB (8 MB each for program and data); module occupies 2 slots	**6ES7416-3ES07-0AB0**
Memory card RAM	
• 2 MB	**6ES7952-1AL00-0AA0**
• 4 MB	**6ES7952-1AM00-0AA0**
• 8 MB	**6ES7952-1AP00-0AA0**
• 16 MB	**6ES7952-1AS00-0AA0**
• 64 MB	**6ES7952-1AY00-0AA0**
Memory Card Flash-EPROM Only required to update firmware	
• 16 MB	**6ES7952-1KS00-0AA0**
CP 443-1 Communication module for connecting SIMATIC S7-400 to Industrial Ethernet via TCP/IP, ISO and UDP; PROFINET IO controller, MRP; integrated real-time switch ERTEC with two ports; 2 × RJ45 interface; S7 communication, open communication (SEND/RECEIVE) with FETCH/WRITE, with or without RFC 1006, DHCP, SNMP V2, diagnostics, multicast, access protection via IP access list, initialization via LAN 10/100 Mbit/s; with electronic manual on DVD	**6GK7443-1EX30-0XE0**
CP 443-5 Extended Communication module for connection of SIMATIC S7-400 to PROFIBUS as DP master or for S7 communication, for increasing the number of DP lines, for data set routing with SIMATIC PDM and for 10-ms time stamping, electronic manual on CD; module occupies 1 slot	**6GK7443-5DX05-0XE0**
IF 964-DP Interface module for connection of another PROFIBUS DP line, for plugging into a free DP module slot of the CPU	**6ES7964-2AA04-0AB0**

	Article No.
PS 407 power supply module; 10 A 120/230 V AC/DC; 5 V DC/10 A, 24 V DC/1 A; with battery compartment for 2 backup batteries, module occupies 2 slots	**6ES7407-0KA02-0AA0**
PS 407 power supply module; 10 A, optional redundancy 120/230 V AC/DC; 5 V DC/10 A, 24 V DC/1 A; with battery compartment for 2 backup batteries, module occupies 2 slots	**6ES7407-0KR02-0AA0**
PS 407 power supply module; 20 A 120/230 V AC/DC; 5 V DC/20 A, 24 V DC/1 A; with battery compartment for 2 backup batteries, module occupies 2 slots	**6ES7407-0RA02-0AA0**
PS 405 power supply module; 10 A 24 V DC; 5 V DC/10 A, 24 V DC/1 A; with battery compartment for 2 backup batteries, module occupies 2 slots	**6ES7405-0KA02-0AA0**
PS 405 power supply module; 10 A, optional redundancy 24 V DC; 5 V DC/10 A, 24 V DC/1 A; with battery compartment for 2 backup batteries, module occupies 2 slots	**6ES7405-0KR02-0AA0**
PS 405 power supply module; 20 A 24 V DC; 5 V DC/20 A, 24 V DC/1 A; with battery compartment for 2 backup batteries, module occupies 2 slots	**6ES7405-0RA02-0AA0**
Backup battery Type AA, 2.3 Ah	**6ES7971-0BA00**
Aluminum UR1 rack 18 slots	**6ES7400-1TA11-0AA0**
Aluminum UR2 rack 9 slots	**6ES7400-1JA11-0AA0**
Steel UR1 rack 18 slots	**6ES7400-1TA01-0AA0**
Steel UR2 rack 9 slots	**6ES7400-1JA01-0AA0**
Runtime licenses for SIMATIC PCS 7 automation systems (can be added to existing licenses)	
SIMATIC PCS 7 AS Runtime license Language-neutral, floating license for 1 user No SIMATIC PCS 7 Software Media Package	
• Physical delivery License key on USB flash drive, certificate of license	
- 100 POs	**6ES7653-2BA00-0XB5**
- 1 000 POs	**6ES7653-2BB00-0XB5**
- 10 000 POs	**6ES7653-2BC00-0XB5**
• Online delivery License key download, online certificate of license Note: Email address required!	
- 100 POs	**6ES7653-2BA00-0XH5**
- 1 000 POs	**6ES7653-2BB00-0XH5**
- 10 000 POs	**6ES7653-2BC00-0XH5**

Ordering data

Configuration tables for high availability automation systems

	Article No.									
AS 412-5-1H (Single Station) with SIMATIC PCS 7 AS Runtime license for 100 POs CPU with 2 PROFIBUS interfaces (MPI/DP master and DP master) and 1 PN/IE interface (2 port switch) 1 MB RAM (512 KB each for program and data)	**6ES7654-**									
	■	■	■	■	■	-	■	■	F	■
Type of delivery										
• Individual components, not pre-assembled	7									
• Pre-assembled and tested	8									
Memory card										
• Memory card 1 MB RAM (up to approx. 30 POs)		A								
• Memory card 2 MB RAM (up to approx. 100 POs)		B								
CPU type										
• CPU 412-5H (up to approx. 30 POs)			A							
Additive IF 964-DP interface module										
• Without additive IF 964-DP				0						
Interface to Industrial Ethernet plant bus										
• Without interface module					0					
• 1 × CP 443-1EX30[1)]					3					
• 2 × CP 443-1EX30 for redundant interface[1)]					4					
Racks										
• UR2 (9 slots), aluminum							3			
• UR2 (9 slots), steel							4			
• UR1 (18 slots), aluminum							5			
• UR1 (18 slots), steel							6			
Power supply (without backup batteries)										
• 1 × PS 407, 10 A for 120/230 V AC/DC								B		
• 1 × PS 407, 10 A for 120/230 V AC/DC, optional redundancy								C		
• 1 × PS 407, 20 A for 120/230 V AC/DC								D		
• 2 × PS 407, 10 A for 120/230 V AC/DC (redundant)								E		
• 1 × PS 405, 10 A for 24 V DC								G		
• 1 × PS 405, 10 A for 24 V DC, optional redundancy								H		
• 1 × PS 405, 20 A for 24 V DC								J		
• 2 × PS 405, 10 A for 24 V DC (redundant)								K		
Additive PROFIBUS DP interfaces										
• Without CP 443-5 Extended										0
• 1 × CP 443-5 Extended										1
• 2 × CP 443-5 Extended[1)]										2
• 3 × CP 443-5 Extended[1)]										3
• 4 × CP 443-5 Extended[1)]										4

[1)] Up to 5 CPs can be plugged into the UR2 rack with a single power supply or up to 3 with a redundant power supply.

	Article No.									
AS 414-5-1H (Single Station) with SIMATIC PCS 7 AS Runtime license for 100 POs CPU with 2 PROFIBUS interfaces (MPI/DP master and DP master) and 1 PN/IE interface (2 port switch) 4 MB RAM (2 MB each for program and data)	**6ES7654-**									
	■	■	■	■	■	-	■	■	F	■
Type of delivery										
• Individual components, not pre-assembled	7									
• Pre-assembled and tested	8									
Memory card										
• Memory card 2 MB RAM (up to approx. 100 POs)		B								
• Memory card 4 MB RAM (up to approx. 210 POs)		C								
CPU type										
• CPU 414-5H (up to approx. 350 POs)			E							
Additive IF 964-DP interface module										
• Without additive IF 964-DP				0						
Interface to Industrial Ethernet plant bus										
• Without interface module					0					
• 1 × CP 443-1EX30[1)]					3					
• 2 × CP 443-1EX30 for redundant interface[1)]					4					
Racks										
• UR2 (9 slots), aluminum							3			
• UR2 (9 slots), steel							4			
• UR1 (18 slots), aluminum							5			
• UR1 (18 slots), steel							6			
Power supply (without backup batteries)										
• 1 × PS 407, 10 A for 120/230 V AC/DC								B		
• 1 × PS 407, 10 A for 120/230 V AC/DC, optional redundancy								C		
• 1 × PS 407, 20 A for 120/230 V AC/DC								D		
• 2 × PS 407, 10 A for 120/230 V AC/DC (redundant)								E		
• 1 × PS 405, 10 A for 24 V DC								G		
• 1 × PS 405, 10 A for 24 V DC, optional redundancy								H		
• 1 × PS 405, 20 A for 24 V DC								J		
• 2 × PS 405, 10 A for 24 V DC (redundant)								K		
Additive PROFIBUS DP interfaces										
• Without CP 443-5 Extended										0
• 1 × CP 443-5 Extended										1
• 2 × CP 443-5 Extended[1)]										2
• 3 × CP 443-5 Extended[1)]										3
• 4 × CP 443-5 Extended[1)]										4

[1)] Up to 5 CPs can be plugged into the UR2 rack with a single power supply or up to 3 with a redundant power supply.

Ordering data (continued)

	Article No.								
AS 416-5-1H (Single Station) with SIMATIC PCS 7 AS Runtime license for 100 POs	**6ES7654-**								
	■	■	■	■	■	-	■	■	F	■
CPU with 2 PROFIBUS interfaces (MPI/DP master and DP master) and 1 PN/IE interface (2 port switch) 16 MB RAM (6 MB for program and 10 MB for data)										
Type of delivery										
• Individual components, not pre-assembled	7									
• Pre-assembled and tested	8									
Memory card										
• Memory card 4 MB RAM (up to approx. 210 POs)		C								
• Memory card 8 MB RAM (up to approx. 800 POs)		D								
• Memory card 16 MB RAM (up to approx. 2 100 POs)		E								
CPU type										
• CPU 416-5H (up to approx. 1 200 POs)			P							
Additive IF 964-DP interface module										
• Without additive IF 964-DP				0						
Interface to Industrial Ethernet plant bus										
• Without interface module					0					
• 1 × CP 443-1EX30[1]					3					
• 2 × CP 443-1EX30 for redundant interface[1]					4					
Racks										
• UR2 (9 slots), aluminum							3			
• UR2 (9 slots), steel							4			
• UR1 (18 slots), aluminum							5			
• UR1 (18 slots), steel							6			
Power supply (without backup batteries)										
• 1 × PS 407, 10 A for 120/230 V AC/DC								B		
• 1 × PS 407, 10 A for 120/230 V AC/DC, optional redundancy								C		
• 1 × PS 407, 20 A for 120/230 V AC/DC								D		
• 2 × PS 407, 10 A for 120/230 V AC/DC (redundant)								E		
• 1 × PS 405, 10 A for 24 V DC								G		
• 1 × PS 405, 10 A for 24 V DC, optional redundancy								H		
• 1 × PS 405, 20 A for 24 V DC								J		
• 2 × PS 405, 10 A for 24 V DC (redundant)								K		
Additive PROFIBUS DP interfaces										
• Without CP 443-5 Extended										0
• 1 × CP 443-5 Extended										1
• 2 × CP 443-5 Extended[1]										2
• 3 × CP 443-5 Extended[1]										3
• 4 × CP 443-5 Extended[1]										4

[1] Up to 5 CPs can be plugged into the UR2 rack with a single power supply or up to 3 with a redundant power supply.

	Article No.								
AS 417-5-1H (Single Station) with SIMATIC PCS 7 AS Runtime license for 100 POs	**6ES7654-**								
	■	■	■	■	■	-	■	■	F	■
CPU with 2 PROFIBUS interfaces (MPI/DP master and DP master) and 1 PN/IE interface (2 port switch) 32 MB RAM (16 MB each for program and data)										
Type of delivery										
• Individual components, not pre-assembled	7									
• Pre-assembled and tested	8									
Memory card										
• Memory card 4 MB RAM (up to approx. 210 POs)		C								
• Memory card 8 MB RAM (up to approx. 800 POs)		D								
• Memory card 16 MB RAM (up to approx. 2 100 POs)		E								
• Memory card 64 MB RAM		G								
CPU type										
• CPU 417-5H (up to approx. 2 000 POs)			M							
Additive IF 964-DP interface module										
• Without additive IF 964-DP				0						
Interface to Industrial Ethernet plant bus										
• Without interface module					0					
• 1 × CP 443-1EX30[1]					3					
• 2 × CP 443-1EX30 for redundant interface[1]					4					
Racks										
• UR2 (9 slots), aluminum							3			
• UR2 (9 slots), steel							4			
• UR1 (18 slots), aluminum							5			
• UR1 (18 slots), steel							6			
Power supply (without backup batteries)										
• 1 × PS 407, 10 A for 120/230 V AC/DC								B		
• 1 × PS 407, 10 A for 120/230 V AC/DC, optional redundancy								C		
• 1 × PS 407, 20 A for 120/230 V AC/DC								D		
• 2 × PS 407, 10 A for 120/230 V AC/DC (redundant)								E		
• 1 × PS 405, 10 A for 24 V DC								G		
• 1 × PS 405, 10 A for 24 V DC, optional redundancy								H		
• 1 × PS 405, 20 A for 24 V DC								J		
• 2 × PS 405, 10 A for 24 V DC (redundant)								K		
Additive PROFIBUS DP interfaces										
• Without CP 443-5 Extended										0
• 1 × CP 443-5 Extended										1
• 2 × CP 443-5 Extended[1]										2
• 3 × CP 443-5 Extended[1]										3
• 4 × CP 443-5 Extended[1]										4

[1] Up to 5 CPs can be plugged into the UR2 rack with a single power supply or up to 3 with a redundant power supply.

Ordering data (continued)

	Article No.								
AS 412-5-2H (Redundancy Station) with SIMATIC PCS 7 AS Runtime license for 100 POs	**6ES7656-**								
2 × CPU each with 2 PROFIBUS interfaces (MPI/DP master and DP master) and 1 PN/IE interface (2-port switch)									
2 × 1 MB RAM (512 KB each for program and data)									
Type of delivery									
• Individual components, not pre-assembled	**7**								
• Pre-assembled and tested	**8**								
Memory card									
• 2 × Memory Card 1 MB RAM (up to approx. 30 POs)		**A**							
• 2 × Memory Card 2 MB RAM (up to approx. 100 POs)		**B**							
CPU type									
• 2 × CPU 412-5H (up to approx. 30 POs)			**A**						
Sync modules and cables									
• 2 × 2 sync modules for distances up to 10 m and 2 × FO sync cable, 1 m				**3**					
Interface to Industrial Ethernet plant bus									
• Without interface module					**0**				
• 2 × CP 443-1EX30 for redundant interface[1]					**3**				
• 2 × 2 CP 443-1EX30 for 4-way connection[1]					**4**				
Racks									
• 1 × UR2-H (2 × 9 slots), aluminum						**1**			
• 1 × UR2-H (2 × 9 slots), steel						**2**			
• 2 × UR2 (9 slots), aluminum						**3**			
• 2 × UR2 (9 slots), steel						**4**			
Power supply (without backup batteries)									
• 2 × PS 407, 10 A for 120/230 V AC/DC							**B**		
• 2 × PS 407, 10 A for 120/230 V AC/DC, optional redundancy							**C**		
• 2 × PS 407, 20 A for 120/230 V AC/DC							**D**		
• 2 × 2 PS 407, 10 A for 120/230 V AC/DC (redundant)							**E**		
• 2 × PS 405, 10 A for 24 V DC							**G**		
• 2 × PS 405, 10 A for 24 V DC, optional redundancy							**H**		
• 2 × PS 405, 20 A for 24 V DC							**J**		
• 2 × 2 PS 405, 10 A for 24 V DC (redundant)							**K**		
Additive PROFIBUS DP interfaces									
• Without CP 443-5 Extended									**0**
• 2 × CP 443-5 Extended									**1**
• 2 × 2 CP 443-5 Extended[1]									**2**
• 2 × 3 CP 443-5 Extended[1]									**3**
• 2 × 4 CP 443-5 Extended[1]									**4**

[1] Up to 5 CPs can be plugged in per subsystem with a single power supply or up to 3 with a redundant power supply.

	Article No.								
AS 414-5-2H (Redundancy Station) with SIMATIC PCS 7 AS Runtime license for 100 POs	**6ES7656-**								
2 × CPU each with 2 PROFIBUS interfaces (MPI/DP master and DP master) and 1 PN/IE interface (2-port switch)									
2 × 4 MB RAM (2 MB each for program and data)									
Type of delivery									
• Individual components, not pre-assembled	**7**								
• Pre-assembled and tested	**8**								
Memory card									
• 2 × Memory Card 2 MB RAM (up to approx. 100 POs)		**B**							
• 2 × Memory Card 4 MB RAM (up to approx. 210 POs)		**C**							
CPU type									
• 2 × CPU 414-5H (up to approx. 350 POs)			**E**						
Sync modules and cables									
• 2 × 2 sync modules for distances up to 10 m and 2 × FO sync cable, 1 m				**3**					
• 2 × 2 sync modules for up to 10 km and 2 × FO sync cable, 1 m, for testing				**4**					
Interface to Industrial Ethernet plant bus									
• Without interface module					**0**				
• 2 × CP 443-1EX30 for redundant interface[1]					**3**				
• 2 × 2 CP 443-1EX30 for 4-way connection[1]					**4**				
Racks									
• 1 × UR2-H (2 × 9 slots), aluminum						**1**			
• 1 × UR2-H (2 × 9 slots), steel						**2**			
• 2 × UR2 (9 slots), aluminum						**3**			
• 2 × UR2 (9 slots), steel						**4**			
Power supply (without backup batteries)									
• 2 × PS 407, 10 A for 120/230 V AC/DC							**B**		
• 2 × PS 407, 10 A for 120/230 V AC/DC, optional redundancy							**C**		
• 2 × PS 407, 20 A for 120/230 V AC/DC							**D**		
• 2 × 2 PS 407, 10 A for 120/230 V AC/DC (redundant)							**E**		
• 2 × PS 405, 10 A for 24 V DC							**G**		
• 2 × PS 405, 10 A for 24 V DC, optional redundancy							**H**		
• 2 × PS 405, 20 A for 24 V DC							**J**		
• 2 × 2 PS 405, 10 A for 24 V DC (redundant)							**K**		
Additive PROFIBUS DP interfaces									
• Without CP 443-5 Extended									**0**
• 2 × CP 443-5 Extended									**1**
• 2 × 2 CP 443-5 Extended[1]									**2**
• 2 × 3 CP 443-5 Extended[1]									**3**
• 2 × 4 CP 443-5 Extended[1]									**4**

[1] Up to 5 CPs can be plugged in per subsystem with a single power supply or up to 3 with a redundant power supply.

Ordering data (continued)

	Article No.								
AS 416-5-2H (Redundancy Station) with SIMATIC PCS 7 AS Runtime license for 100 POs 2 × CPU each with 2 PROFIBUS interfaces (MPI/DP master and DP master) and 1 PN/IE interface (2-port switch) 2 × 16 MB RAM (6 MB each for program and 10 MB each for data)	**6ES7656-**								
	■	■	■	■	■	-	■	■	F	■
Type of delivery										
• Individual components, not pre-assembled	7									
• Pre-assembled and tested	8									
Memory card										
• 2 × Memory Card 4 MB RAM (up to approx. 210 POs)		C								
• 2 × Memory Card 8 MB RAM (up to approx. 800 POs)		D								
• 2 × Memory Card 16 MB RAM (up to approx. 2 100 POs)		E								
CPU type										
• 2 × CPU 416-5H (up to approx. 1 200 POs)			P							
Sync modules and cables										
• 2 × 2 sync modules for distances up to 10 m and 2 × FO sync cable, 1 m				3						
• 2 × 2 sync modules for up to 10 km and 2 × FO sync cable, 1 m, for testing				4						
Interface to Industrial Ethernet plant bus										
• Without interface module					0					
• 2 × CP 443-1EX30 for redundant interface[1)]					3					
• 2 × 2 CP 443-1EX30 for 4-way connection[1)]					4					
Racks										
• 1 × UR2-H (2 × 9 slots), aluminum							1			
• 1 × UR2-H (2 × 9 slots), steel							2			
• 2 × UR2 (9 slots), aluminum							3			
• 2 × UR2 (9 slots), steel							4			
Power supply (without backup batteries)										
• 2 × PS 407, 10 A for 120/230 V AC/DC								B		
• 2 × PS 407, 10 A for 120/230 V AC/DC, optional redundancy								C		
• 2 × PS 407, 20 A for 120/230 V AC/DC								D		
• 2 × 2 PS 407, 10 A for 120/230 V AC/DC (redundant)								E		
• 2 × PS 405, 10 A for 24 V DC								G		
• 2 × PS 405, 10 A for 24 V DC, optional redundancy								H		
• 2 × PS 405, 20 A for 24 V DC								J		
• 2 × 2 PS 405, 10 A for 24 V DC (redundant)								K		
Additive PROFIBUS DP interfaces										
• Without CP 443-5 Extended										0
• 2 × CP 443-5 Extended										1
• 2 × 2 CP 443-5 Extended[1)]										2
• 2 × 3 CP 443-5 Extended[1)]										3
• 2 × 4 CP 443-5 Extended[1)]										4

[1)] Up to 5 CPs can be plugged in per subsystem with a single power supply or up to 3 with a redundant power supply.

	Article No.								
AS 417-5-2H (Redundancy Station) with SIMATIC PCS 7 AS Runtime license for 100 POs 2 × CPU each with 2 PROFIBUS interfaces (MPI/DP master and DP master) and 1 PN/IE interface (2-port switch) 2 × 32 MB RAM (16 MB each for program and data)	**6ES7656-**								
	■	■	■	■	■	-	■	■	F	■
Type of delivery										
• Individual components, not pre-assembled	7									
• Pre-assembled and tested	8									
Memory card										
• 2 × Memory Card 4 MB RAM (up to approx. 210 POs)		C								
• 2 × Memory Card 8 MB RAM (up to approx. 800 POs)		D								
• 2 × Memory Card 16 MB RAM (up to approx. 2 100 POs)		E								
CPU type										
• 2 × CPU 417-5H (up to approx. 2 000 POs)			M							
Sync modules and cables										
• 2 × 2 sync modules for distances up to 10 m and 2 × FO sync cable, 1 m				3						
• 2 × 2 sync modules for up to 10 km and 2 × FO sync cable, 1 m, for testing				4						
Interface to Industrial Ethernet plant bus										
• Without interface module					0					
• 2 × CP 443-1EX30 for redundant interface[1)]					3					
• 2 × 2 CP 443-1EX30 for 4-way connection[1)]					4					
Racks										
• 1 × UR2-H (2 × 9 slots), aluminum							1			
• 1 × UR2-H (2 × 9 slots), steel							2			
• 2 × UR2 (9 slots), aluminum							3			
• 2 × UR2 (9 slots), steel							4			
Power supply (without backup batteries)										
• 2 × PS 407, 10 A for 120/230 V AC/DC								B		
• 2 × PS 407, 10 A for 120/230 V AC/DC, optional redundancy								C		
• 2 × PS 407, 20 A for 120/230 V AC/DC								D		
• 2 × 2 PS 407, 10 A for 120/230 V AC/DC (redundant)								E		
• 2 × PS 405, 10 A for 24 V DC								G		
• 2 × PS 405, 10 A for 24 V DC, optional redundancy								H		
• 2 × PS 405, 20 A for 24 V DC								J		
• 2 × 2 PS 405, 10 A for 24 V DC (redundant)								K		
Additive PROFIBUS DP interfaces										
• Without CP 443-5 Extended										0
• 2 × CP 443-5 Extended										1
• 2 × 2 CP 443-5 Extended[1)]										2
• 2 × 3 CP 443-5 Extended[1)]										3
• 2 × 4 CP 443-5 Extended[1)]										4

[1)] Up to 5 CPs can be plugged in per subsystem with a single power supply or up to 3 with a redundant power supply.

Ordering data

Individual components of high availability automation systems

	Article No.
Individual components of the high availability SIMATIC PCS 7 automation systems	
CPU 412-5H PN/DP 1 MB RAM (512 KB each for program and data) Module occupies 2 slots	**6ES7412-5HK06-0AB0**
CPU 414-5H PN/DP 4 MB RAM (2 MB each for program and data) Module occupies 2 slots	**6ES7414-5HM06-0AB0**
CPU 416-5H PN/DP 16 MB RAM (6 MB for program and 10 MB for data) Module occupies 2 slots	**6ES7416-5HS06-0AB0**
CPU 417-5H PN/DP 32 MB RAM (16 MB each for program and data) Module occupies 2 slots	**6ES7417-5HT06-0AB0**
Sync set For linking the two redundant 412-5H, 414-5H, 416-5H or 417-5H CPUs; for distances up to	
• 10 m, consisting of 4 sync modules for up to 10 m and 2 fiber-optic sync cables, 1 m each	**6ES7656-7XX30-0XE0**
• 10 km, consisting of 4 sync modules for up to 10 km Note: please order fiber-optic sync cables (2 units) in the required length separately.	**6ES7656-7XX40-0XE0**
Sync module For linking the two 412-5H, 414-5H, 416-5H or 417-5H CPUs; 2 modules required per CPU	
For distances of up to	
• 10 m	**6ES7960-1AA06-0XA0**
• 10 km	**6ES7960-1AB06-0XA0**
Sync cable (fiber-optic cable) For connecting the two 412-5H, 414-5H, 416-5H or 417-5H CPUs; each redundant automation system requires 2 cables	
• 1 m	**6ES7960-1AA04-5AA0**
• 2 m	**6ES7960-1AA04-5BA0**
• 10 m	**6ES7960-1AA04-5KA0**
Other lengths	On request

	Article No.
Memory card RAM	
• 1 MB	**6ES7952-1AK00-0AA0**
• 2 MB	**6ES7952-1AL00-0AA0**
• 4 MB	**6ES7952-1AM00-0AA0**
• 8 MB	**6ES7952-1AP00-0AA0**
• 16 MB	**6ES7952-1AS00-0AA0**
• 64 MB	**6ES7952-1AY00-0AA0**
Memory Card Flash-EPROM Only required to update firmware. Alternative: firmware update via the engineering system	
• 16 MB	**6ES7952-1KS00-0AA0**
CP 443-1 Communication module for connecting SIMATIC S7-400 to Industrial Ethernet via TCP/IP, ISO and UDP; PROFINET IO controller, MRP; integrated real-time switch ERTEC with two ports; 2 × RJ45 interface; S7 communication, open communication (SEND/RECEIVE) with FETCH/WRITE, with or without RFC 1006, DHCP, SNMP V2, diagnostics, multicast, access protection via IP access list, initialization via LAN 10/100 Mbit/s; with electronic manual on DVD	**6GK7443-1EX30-0XE0**
CP 443-5 Extended Communication module for connection of SIMATIC S7-400 to PROFIBUS as DP master or for S7 communication, for increasing the number of DP lines, for data set routing with SIMATIC PDM and for 10-ms time stamping, electronic manual on CD; module occupies 1 slot	**6GK7443-5DX05-0XE0**

Ordering data

	Article No.
PS 407 power supply module; 10 A 120/230 V AC/DC; 5 V DC/10 A, 24 V DC/1 A; with battery compartment for 2 backup batteries, module occupies 2 slots	**6ES7407-0KA02-0AA0**
PS 407 power supply module; 10 A, optional redundancy 120/230 V AC/DC; 5 V DC/10 A, 24 V DC/1 A; with battery compartment for 2 backup batteries, module occupies 2 slots	**6ES7407-0KR02-0AA0**
PS 407 power supply module; 20 A 120/230 V AC/DC; 5 V DC/20 A, 24 V DC/1 A; with battery compartment for 2 backup batteries, module occupies 2 slots	**6ES7407-0RA02-0AA0**
PS 405 power supply module; 10 A 24 V DC; 5 V DC/10 A, 24 V DC/1 A; with battery compartment for 2 backup batteries, module occupies 2 slots	**6ES7405-0KA02-0AA0**
PS 405 power supply module; 10 A, optional redundancy 24 V DC; 5 V DC/10 A, 24 V DC/1 A; with battery compartment for 2 backup batteries, module occupies 2 slots	**6ES7405-0KR02-0AA0**
PS 405 power supply module; 20 A 24 V DC; 5 V DC/20 A, 24 V DC/1 A; with battery compartment for 2 backup batteries, module occupies 2 slots	**6ES7405-0RA02-0AA0**
Backup battery Type AA, 2.3 Ah	**6ES7971-0BA00**

	Article No.
Aluminum UR1 rack 18 slots	**6ES7400-1TA11-0AA0**
Aluminum UR2 rack 9 slots	**6ES7400-1JA11-0AA0**
Aluminum UR2-H rack For divided central controllers; 2 × 9 slots	**6ES7400-2JA10-0AA0**
Steel UR1 rack 18 slots	**6ES7400-1TA01-0AA0**
Steel UR2 rack 9 slots	**6ES7400-1JA01-0AA0**
Steel UR2-H rack For divided central controllers; 2 × 9 slots	**6ES7400-2JA00-0AA0**
Runtime licenses for SIMATIC PCS 7 automation systems (can be added to existing licenses)	See "Individual components of standard automation systems", page 8/28

Ordering data

Configuration tables for safety-related automation systems

	Article No.									
AS 412F (Single Station) with SIMATIC PCS 7 AS Runtime license for 100 POs	**6ES7654-**									
	■	■	■	■	■	-	■	■	F	■
CPU with 2 PROFIBUS interfaces (MPI/DP master and DP master) and 1 PN/IE interface (2 port switch)										
1 MB RAM (512 KB each for program and data)										
Type of delivery										
• Individual components, not pre-assembled	7									
• Pre-assembled and tested	8									
Memory card										
• Memory card 1 MB RAM (up to approx. 30 POs)		A								
• Memory card 2 MB RAM (up to approx. 100 POs)		B								
CPU type										
• CPU 412-5H with S7 F Systems RT license (up to approx. 30 POs)			B							
Additive interface modules										
• Without additive interface module				0						
Interface to Industrial Ethernet plant bus										
• Without interface module					0					
• 1 × CP 443-1EX30[1]					3					
• 2 × CP 443-1EX30 for redundant interface[1]					4					
Racks										
• UR2 (9 slots), aluminum							3			
• UR2 (9 slots), steel							4			
• UR1 (18 slots), aluminum							5			
• UR1 (18 slots), steel							6			
Power supply (without backup batteries)										
• 1 × PS 407, 10 A for 120/230 V AC/DC								B		
• 1 × PS 407, 10 A for 120/230 V AC/DC, optional redundancy								C		
• 1 × PS 407, 20 A for 120/230 V AC/DC								D		
• 2 × PS 407, 10 A for 120/230 V AC/DC (redundant)								E		
• 1 × PS 405, 10 A for 24 V DC								G		
• 1 × PS 405, 10 A for 24 V DC, optional redundancy								H		
• 1 × PS 405, 20 A for 24 V DC								J		
• 2 × PS 405, 10 A for 24 V DC (redundant)								K		
Additive PROFIBUS DP interfaces										
• Without CP 443-5 Extended										0
• 1 × CP 443-5 Extended										1
• 2 × CP 443-5 Extended[1]										2
• 3 × CP 443-5 Extended[1]										3
• 4 × CP 443-5 Extended[1]										4

[1] Up to 5 CPs can be plugged into the UR2 rack with a single power supply or up to 3 with a redundant power supply.

	Article No.									
AS 414F (Single Station) with SIMATIC PCS 7 AS Runtime license for 100 POs	**6ES7654-**									
	■	■	■	■	■	-	■	■	F	■
CPU with 2 PROFIBUS interfaces (MPI/DP master and DP master) and 1 PN/IE interface (2 port switch)										
4 MB RAM (2 MB each for program and data)										
Type of delivery										
• Individual components, not pre-assembled	7									
• Pre-assembled and tested	8									
Memory card										
• Memory card 2 MB RAM (up to approx. 100 POs)		B								
• Memory card 4 MB RAM (up to approx. 210 POs)		C								
CPU type										
• CPU 414-5H with S7 F Systems RT license (up to approx. 350 POs)			F							
Additive interface modules										
• Without additive interface module				0						
Interface to Industrial Ethernet plant bus										
• Without interface module					0					
• 1 × CP 443-1EX30[1]					3					
• 2 × CP 443-1EX30 for redundant interface[1]					4					
Racks										
• UR2 (9 slots), aluminum							3			
• UR2 (9 slots), steel							4			
• UR1 (18 slots), aluminum							5			
• UR1 (18 slots), steel							6			
Power supply (without backup batteries)										
• 1 × PS 407, 10 A for 120/230 V AC/DC								B		
• 1 × PS 407, 10 A for 120/230 V AC/DC, optional redundancy								C		
• 1 × PS 407, 20 A for 120/230 V AC/DC								D		
• 2 × PS 407, 10 A for 120/230 V AC/DC (redundant)								E		
• 1 × PS 405, 10 A for 24 V DC								G		
• 1 × PS 405, 10 A for 24 V DC, optional redundancy								H		
• 1 × PS 405, 20 A for 24 V DC								J		
• 2 × PS 405, 10 A for 24 V DC (redundant)								K		
Additive PROFIBUS DP interfaces										
• Without CP 443-5 Extended										0
• 1 × CP 443-5 Extended										1
• 2 × CP 443-5 Extended[1]										2
• 3 × CP 443-5 Extended[1]										3
• 4 × CP 443-5 Extended[1]										4

[1] Up to 5 CPs can be plugged into the UR2 rack with a single power supply or up to 3 with a redundant power supply.

Ordering data (continued)

	Article No.								
AS 416F (Single Station) with SIMATIC PCS 7 AS Runtime license for 100 POs	**6ES7654-**								
	■	■	■	■	■	-	■	■ F	■
CPU with 2 PROFIBUS interfaces (MPI/DP master and DP master) and 1 PN/IE interface (2 port switch)									
16 MB RAM (6 MB for program and 10 MB for data)									
Type of delivery									
• Individual components, not pre-assembled	7								
• Pre-assembled and tested	8								
Memory card									
• Memory card 4 MB RAM (up to approx. 210 POs)		C							
• Memory card 8 MB RAM (up to approx. 800 POs)		D							
• Memory card 16 MB RAM (up to approx. 2 100 POs)		E							
CPU type									
• CPU 416-5H with S7 F Systems RT license (up to approx. 1 200 POs)			Q						
Additive IF 964-DP interface module									
• Without additive IF 964-DP				0					
Interface to Industrial Ethernet plant bus									
• Without interface module					0				
• 1 × CP 443-1EX30[1]					3				
• 2 × CP 443-1EX30 for redundant interface[1]					4				
Racks									
• UR2 (9 slots), aluminum						3			
• UR2 (9 slots), steel						4			
• UR1 (18 slots), aluminum						5			
• UR1 (18 slots), steel						6			
Power supply (without backup batteries)									
• 1 × PS 407, 10 A for 120/230 V AC/DC							B		
• 1 × PS 407, 10 A for 120/230 V AC/DC, optional redundancy							C		
• 1 × PS 407, 20 A for 120/230 V AC/DC							D		
• 2 × PS 407, 10 A for 120/230 V AC/DC (redundant)							E		
• 1 × PS 405, 10 A for 24 V DC							G		
• 1 × PS 405, 10 A for 24 V DC, optional redundancy							H		
• 1 × PS 405, 20 A for 24 V DC							J		
• 2 × PS 405, 10 A for 24 V DC (redundant)							K		
Additive PROFIBUS DP interfaces									
• Without CP 443-5 Extended									0
• 1 × CP 443-5 Extended									1
• 2 × CP 443-5 Extended[1]									2
• 3 × CP 443-5 Extended[1]									3
• 4 × CP 443-5 Extended[1]									4

[1] Up to 5 CPs can be plugged into the UR2 rack with a single power supply or up to 3 with a redundant power supply.

	Article No.								
AS 417F (Single Station) with SIMATIC PCS 7 AS Runtime license for 100 POs	**6ES7654-**								
	■	■	■	■	■	-	■	■ F	■
CPU with 2 PROFIBUS interfaces (MPI/DP master and DP master) and 1 PN/IE interface (2 port switch)									
32 MB RAM (16 MB each for program and data)									
Type of delivery									
• Individual components, not pre-assembled	7								
• Pre-assembled and tested	8								
Memory card									
• Memory card 4 MB RAM (up to approx. 210 POs)		C							
• Memory card 8 MB RAM (up to approx. 800 POs)		D							
• Memory card 16 MB RAM (up to approx. 2 100 POs)		E							
CPU type									
• CPU 417-5H with S7 F Systems RT license (up to approx. 2 000 POs)			N						
Additive interface modules									
• Without additive interface module				0					
Interface to Industrial Ethernet plant bus									
• Without interface module					0				
• 1 × CP 443-1EX30[1]					3				
• 2 × CP 443-1EX30 for redundant interface[1]					4				
Racks									
• UR2 (9 slots), aluminum						3			
• UR2 (9 slots), steel						4			
• UR1 (18 slots), aluminum						5			
• UR1 (18 slots), steel						6			
Power supply (without backup batteries)									
• 1 × PS 407, 10 A for 120/230 V AC/DC							B		
• 1 × PS 407, 10 A for 120/230 V AC/DC, optional redundancy							C		
• 1 × PS 407, 20 A for 120/230 V AC/DC							D		
• 2 × PS 407, 10 A for 120/230 V AC/DC (redundant)							E		
• 1 × PS 405, 10 A for 24 V DC							G		
• 1 × PS 405, 10 A for 24 V DC, optional redundancy							H		
• 1 × PS 405, 20 A for 24 V DC							J		
• 2 × PS 405, 10 A for 24 V DC (redundant)							K		
Additive PROFIBUS DP interfaces									
• Without CP 443-5 Extended									0
• 1 × CP 443-5 Extended									1
• 2 × CP 443-5 Extended[1]									2
• 3 × CP 443-5 Extended[1]									3
• 4 × CP 443-5 Extended[1]									4

[1] Up to 5 CPs can be plugged into the UR2 rack with a single power supply or up to 3 with a redundant power supply.

Ordering data (continued)

	Article No.								
AS 412FH (Redundant Station) with SIMATIC PCS 7 AS Runtime license for 100 POs	**6ES7656-**								
	■	■	■	■	■	-	■	■	F	■
2 × CPU each with 2 PROFIBUS interfaces (MPI/DP master and DP master) and 1 PN/IE interface (2-port switch)										
2 × 1 MB RAM (512 KB each for program and data)										
Type of delivery										
• Individual components, not pre-assembled	7									
• Pre-assembled and tested	8									
Memory card										
• 2 × Memory Card 1 MB RAM (up to approx. 30 POs)		A								
• 2 × Memory Card 2 MB RAM (up to approx. 100 POs)		B								
CPU type										
• 2 × CPU 412-5H with S7 F Systems RT license (up to approx. 30 POs)			B							
Sync modules and cables										
• 2 × 2 sync modules for distances up to 10 m and 2 × FO sync cable, 1 m				3						
Interface to Industrial Ethernet plant bus										
• Without interface module					0					
• 2 × CP 443-1EX30 for redundant interface[1)]					3					
• 2 × 2 CP 443-1EX30 for 4-way connection[1)]					4					
Racks										
• 1 × UR2-H (2 × 9 slots), aluminum						1				
• 1 × UR2-H (2 × 9 slots), steel						2				
• 2 × UR2 (9 slots), aluminum						3				
• 2 × UR2 (9 slots), steel						4				
Power supply (without backup batteries)										
• 2 × PS 407, 10 A for 120/230 V AC/DC							B			
• 2 × PS 407, 10 A for 120/230 V AC/DC, optional redundancy							C			
• 2 × PS 407, 20 A for 120/230 V AC/DC							D			
• 2 × 2 PS 407, 10 A for 120/230 V AC/DC (redundant)							E			
• 2 × PS 405, 10 A for 24 V DC							G			
• 2 × PS 405, 10 A for 24 V DC, optional redundancy							H			
• 2 × PS 405, 20 A for 24 V DC							J			
• 2 × 2 PS 405, 10 A for 24 V DC (redundant)							K			
Additive PROFIBUS DP interfaces										
• Without CP 443-5 Extended										0
• 2 × CP 443-5 Extended										1
• 2 × 2 CP 443-5 Extended[1)]										2
• 2 × 3 CP 443-5 Extended[1)]										3
• 2 × 4 CP 443-5 Extended[1)]										4

[1)] Up to 5 CPs can be plugged in per subsystem with a single power supply or up to 3 with a redundant power supply.

	Article No.								
AS 414FH (Redundant Station) with SIMATIC PCS 7 AS Runtime license for 100 POs	**6ES7656-**								
	■	■	■	■	■	-	■	■	F	■
2 × CPU each with 2 PROFIBUS interfaces (MPI/DP master and DP master) and 1 PN/IE interface (2-port switch)										
2 × 4 MB RAM (2 MB each for program and data)										
Type of delivery										
• Individual components, not pre-assembled	7									
• Pre-assembled and tested	8									
Memory card										
• 2 × Memory Card 2 MB RAM (up to approx. 100 POs)		B								
• 2 × Memory Card 4 MB RAM (up to approx. 210 POs)		C								
CPU type										
• 2 × CPU 414-5H with S7 F Systems RT license (up to approx. 350 POs)			F							
Sync modules and cables										
• 2 × 2 sync modules for distances up to 10 m and 2 × FO sync cable, 1 m				3						
• 2 × 2 sync modules for up to 10 km and 2 × FO sync cable, 1 m, for testing				4						
Interface to Industrial Ethernet plant bus										
• Without interface module					0					
• 2 × CP 443-1EX30 for redundant interface[1)]					3					
• 2 × 2 CP 443-1EX30 for 4-way connection[1)]					4					
Racks										
• 1 × UR2-H (2 × 9 slots), aluminum						1				
• 1 × UR2-H (2 × 9 slots), steel						2				
• 2 × UR2 (9 slots), aluminum						3				
• 2 × UR2 (9 slots), steel						4				
Power supply (without backup batteries)										
• 2 × PS 407, 10 A for 120/230 V AC/DC							B			
• 2 × PS 407, 10 A for 120/230 V AC/DC, optional redundancy							C			
• 2 × PS 407, 20 A for 120/230 V AC/DC							D			
• 2 × 2 PS 407, 10 A for 120/230 V AC/DC (redundant)							E			
• 2 × PS 405, 10 A for 24 V DC							G			
• 2 × PS 405, 10 A for 24 V DC, optional redundancy							H			
• 2 × PS 405, 20 A for 24 V DC							J			
• 2 × 2 PS 405, 10 A for 24 V DC (redundant)							K			
Additive PROFIBUS DP interfaces										
• Without CP 443-5 Extended										0
• 2 × CP 443-5 Extended										1
• 2 × 2 CP 443-5 Extended[1)]										2
• 2 × 3 CP 443-5 Extended[1)]										3
• 2 × 4 CP 443-5 Extended[1)]										4

[1)] Up to 5 CPs can be plugged in per subsystem with a single power supply or up to 3 with a redundant power supply.

Ordering data (continued)

	Article No.								
AS 416FH (Redundancy Station) with SIMATIC PCS 7 AS Runtime license for 100 POs	**6ES7656-**								
	■	■	■	■	■	-	■	■ F	■
2 × CPU each with 2 PROFIBUS interfaces (MPI/DP master and DP master) and 1 PN/IE interface (2-port switch)									
2 × 16 MB RAM (6 MB each for program and 10 MB each for data)									
Type of delivery									
• Individual components, not pre-assembled	7								
• Pre-assembled and tested	8								
Memory card									
• 2 × Memory Card 4 MB RAM (up to approx. 210 POs)		C							
• 2 × Memory Card 8 MB RAM (up to approx. 800 POs)		D							
• 2 × Memory Card 16 MB RAM (up to approx. 2 100 POs)		E							
CPU type									
• 2 × CPU 416-5H with S7 F Systems RT license (up to approx. 1 200 POs)			Q						
Sync modules and cables									
• 2 × 2 sync modules for distances up to 10 m and 2 × FO sync cable, 1 m				3					
• 2 × 2 sync modules for up to 10 km and 2 × FO sync cable, 1 m, for testing				4					
Interface to Industrial Ethernet plant bus									
• Without interface module					0				
• 2 × CP 443-1EX30 for redundant interface[1]					3				
• 2 × 2 CP 443-1EX30 for 4-way connection[1]					4				
Racks									
• 1 × UR2-H (2 × 9 slots), aluminum							1		
• 1 × UR2-H (2 × 9 slots), steel							2		
• 2 × UR2 (9 slots), aluminum							3		
• 2 × UR2 (9 slots), steel							4		
Power supply (without backup batteries)									
• 2 × PS 407, 10 A for 120/230 V AC/DC								B	
• 2 × PS 407, 10 A for 120/230 V AC/DC, optional redundancy								C	
• 2 × PS 407, 20 A for 120/230 V AC/DC								D	
• 2 × 2 PS 407, 10 A for 120/230 V AC/DC (redundant)								E	
• 2 × PS 405, 10 A for 24 V DC								G	
• 2 × PS 405, 10 A for 24 V DC, optional redundancy								H	
• 2 × PS 405, 20 A for 24 V DC								J	
• 2 × 2 PS 405, 10 A for 24 V DC (redundant)								K	
Additive PROFIBUS DP interfaces									
• Without CP 443-5 Extended									0
• 2 × CP 443-5 Extended									1
• 2 × 2 CP 443-5 Extended[1]									2
• 2 × 3 CP 443-5 Extended[1]									3
• 2 × 4 CP 443-5 Extended[1]									4

[1] Up to 5 CPs can be plugged in per subsystem with a single power supply or up to 3 with a redundant power supply.

	Article No.								
AS 417FH (Redundant Station) with SIMATIC PCS 7 AS Runtime license for 100 POs	**6ES7656-**								
	■	■	■	■	■	-	■	■ F	■
2 × CPU each with 2 PROFIBUS interfaces (MPI/DP master and DP master) and 1 PN/IE interface (2-port switch)									
2 × 32 MB RAM (16 MB each for program and data)									
Type of delivery									
• Individual components, not pre-assembled	7								
• Pre-assembled and tested	8								
Memory card									
• 2 × Memory Card 4 MB RAM (up to approx. 210 POs)		C							
• 2 × Memory Card 8 MB RAM (up to approx. 800 POs)		D							
• 2 × Memory Card 16 MB RAM (up to approx. 2 100 POs)		E							
CPU type									
• 2 × CPU 417-5H with S7 F Systems RT license (up to approx. 2 000 POs)			N						
Sync modules and cables									
• 2 × 2 sync modules for distances up to 10 m and 2 × FO sync cable, 1 m				3					
• 2 × 2 sync modules for up to 10 km and 2 × FO sync cable, 1 m, for testing				4					
Interface to Industrial Ethernet plant bus									
• Without interface module					0				
• 2 × CP 443-1EX30 for redundant interface[1]					3				
• 2 × 2 CP 443-1EX30 for 4-way connection[1]					4				
Racks									
• 1 × UR2-H (2 × 9 slots), aluminum							1		
• 1 × UR2-H (2 × 9 slots), steel							2		
• 2 × UR2 (9 slots), aluminum							3		
• 2 × UR2 (9 slots), steel							4		
Power supply (without backup batteries)									
• 2 × PS 407, 10 A for 120/230 V AC/DC								B	
• 2 × PS 407, 10 A for 120/230 V AC/DC, optional redundancy								C	
• 2 × PS 407, 20 A for 120/230 V AC/DC								D	
• 2 × 2 PS 407, 10 A for 120/230 V AC/DC (redundant)								E	
• 2 × PS 405, 10 A for 24 V DC								G	
• 2 × PS 405, 10 A for 24 V DC, optional redundancy								H	
• 2 × PS 405, 20 A for 24 V DC								J	
• 2 × 2 PS 405, 10 A for 24 V DC (redundant)								K	
Additive PROFIBUS DP interfaces[1]									
• Without CP 443-5 Extended									0
• 2 × CP 443-5 Extended									1
• 2 × 2 CP 443-5 Extended[1]									2
• 2 × 3 CP 443-5 Extended[1]									3
• 2 × 4 CP 443-5 Extended[1]									4

[1] Up to 5 CPs can be plugged in per subsystem with a single power supply or up to 3 with a redundant power supply.

Ordering data

Individual components of safety-related automation systems

	Article No.
Individual components of the safety-related SIMATIC PCS 7 automation systems	
S7 F Systems RT License For processing safety-related user programs, for one AS 412F/FH, AS 414F/FH, AS 416F/FH or AS 417F/FH system	**6ES7833-1CC00-6YX0**
CPU 412-5H PN/DP 1 MB RAM (512 KB each for program and data) Module occupies 2 slots	**6ES7412-5HK06-0AB0**
CPU 414-5H PN/DP 4 MB RAM (2 MB each for program and data) Module occupies 2 slots	**6ES7414-5HM06-0AB0**
CPU 416-5H PN/DP 16 MB RAM (6 MB for program and 10 MB for data) Module occupies 2 slots	**6ES7416-5HS06-0AB0**
CPU 417-5H PN/DP 32 MB RAM (16 MB each for program and data) Module occupies 2 slots	**6ES7417-5HT06-0AB0**
Sync set For linking the two redundant 412-5H, 414-5H, 416-5H or 417-5H CPUs; for distances up to	
• 10 m, consisting of 4 sync modules for up to 10 m and 2 fiber-optic sync cables, 1 m each	**6ES7656-7XX30-0XE0**
• 10 km, consisting of 4 sync modules for up to 10 km Note: please order fiber-optic sync cables (2 units) in the required length separately.	**6ES7656-7XX40-0XE0**
Sync module For connection of the two CPU 412-5H, 414-5H, 416-5H or 417-5H; 2 modules required for each CPU, for distances up to	
• 10 m	**6ES7960-1AA06-0XA0**
• 10 km	**6ES7960-1AB06-0XA0**
Sync cable (fiber-optic cable) For connecting the two 412-5H, 414-5H, 416-5H or 417-5H CPUs; each redundant automation system requires 2 cables	
• 1 m	**6ES7960-1AA04-5AA0**
• 2 m	**6ES7960-1AA04-5BA0**
• 10 m	**6ES7960-1AA04-5KA0**
Other lengths	On request
Memory card RAM	
• 1 MB	**6ES7952-1AK00-0AA0**
• 2 MB	**6ES7952-1AL00-0AA0**
• 4 MB	**6ES7952-1AM00-0AA0**
• 8 MB	**6ES7952-1AP00-0AA0**
• 16 MB	**6ES7952-1AS00-0AA0**
• 64 MB	**6ES7952-1AY00-0AA0**
Memory Card Flash-EPROM Only required to update firmware; alternative: firmware update via the engineering system	
• 16 MB	**6ES7952-1KS00-0AA0**

	Article No.
CP 443-1 Communication module for connecting SIMATIC S7-400 to Industrial Ethernet via TCP/IP, ISO and UDP; PROFINET IO controller, MRP; integrated real-time switch ERTEC with two ports; 2 × RJ45 interface; S7 communication, open communication (SEND/RECEIVE) with FETCH/WRITE, with or without RFC 1006, DHCP, SNMP V2, diagnostics, multicast, access protection via IP access list, initialization via LAN 10/100 Mbit/s; with electronic manual on DVD	**6GK7443-1EX30-0XE0**
CP 443-5 Extended Communication module for connection of SIMATIC S7-400 to PROFIBUS as DP master or for S7 communication, for increasing the number of DP lines, for data set routing with SIMATIC PDM and for 10-ms time stamping, electronic manual on CD; module occupies 1 slot	**6GK7443-5DX05-0XE0**
PS 407 power supply module with battery compartment for 2 backup batteries, module occupies 2 slots	
• **10 A** 120/230 V AC/DC; 5 V DC/10 A, 24 V DC/1 A	**6ES7407-0KA02-0AA0**
• **10 A, redundant** 120/230 V AC/DC; 5 V DC/10 A, 24 V DC/1 A	**6ES7407-0KR02-0AA0**
• **20 A** 120/230 V AC/DC; 5 V DC/20 A, 24 V DC/1 A	**6ES7407-0RA02-0AA0**
PS 405 power supply module with battery compartment for 2 backup batteries, module occupies 2 slots	
• **10 A** 24 V DC; 5 V DC/10 A, 24 V DC/1 A	**6ES7405-0KA02-0AA0**
• **10 A, redundant** 24 V DC; 5 V DC/10 A, 24 V DC/1 A	**6ES7405-0KR02-0AA0**
• **20 A** 24 V DC; 5 V DC/20 A, 24 V DC/1 A	**6ES7405-0RA02-0AA0**
Backup battery Type AA, 2.3 Ah	**6ES7971-0BA00**
Aluminum rack	
• UR1, 18 slots	**6ES7400-1TA11-0AA0**
• UR2, 9 slots	**6ES7400-1JA11-0AA0**
• UR2-H, for divided central controllers; 2 × 9 slots	**6ES7400-2JA10-0AA0**
Steel rack	
• UR1, 18 slots	**6ES7400-1TA01-0AA0**
• UR2, 9 slots	**6ES7400-1JA01-0AA0**
• UR2-H, for divided central controllers; 2 × 9 slots	**6ES7400-2JA00-0AA0**
Runtime licenses for SIMATIC PCS 7 automation systems (can be added to existing licenses)	See "Individual components of standard automation systems", page 8/28

Overview

The SIMATIC PCS 7 automation systems are extremely rugged, both electrically and mechanically. For extreme ambient conditions, hardened and refined SIPLUS extreme products are another alternative, especially in the case of:

- High humidity
- Condensation
- Chemically, mechanically or biologically active materials

You can find an overview of the complete SIPLUS extreme product range online at:

www.siemens.com/siplus

Under "Devices for extreme requirements > Controllers > Advanced Controllers", you will find conversion tools that display the SIPLUS S7-400 articles for the corresponding SIMATIC S7-400 articles.

Overview

SIMATIC PCS 7 AS RTX with DIN rail, front view

SIMATIC PCS 7 AS RTX

SIMATIC PCS 7 AS RTX is an excellent alternative to S7-400 design standard automation systems, especially for small applications, due to the following characteristics:

- Resistant to vibration and shock thanks to:
  - Compact and robust design
  - Complete absence of fans and rotating storage Media
- Maintenance-free, 24-hour continuous operation at operating temperatures from 0 to 50 °C in an RAL environment (RAL = restricted access location), for example, in a lockable control cabinet

Depending on the preferred communication in the field, the following design versions are available:

- SIMATIC PCS 7 AS RTX PROFIBUS for connecting PROFIBUS DP
- SIMATIC PCS 7 AS RTX PROFINET for connecting PROFINET IO

Application

As a result of its exceptional physical properties and small dimensions, the SIMATIC PCS 7 AS RTX Microbox automation system is exceptionally suitable for industrial use at plant level. Possible fields of application:

- Small production applications
- Package units
- Laboratory automation

SIMATIC PCS 7 AS RTX can also be combined with SIMATIC PCS 7 BOX or automation systems of S7-400 design within a plant.

Design

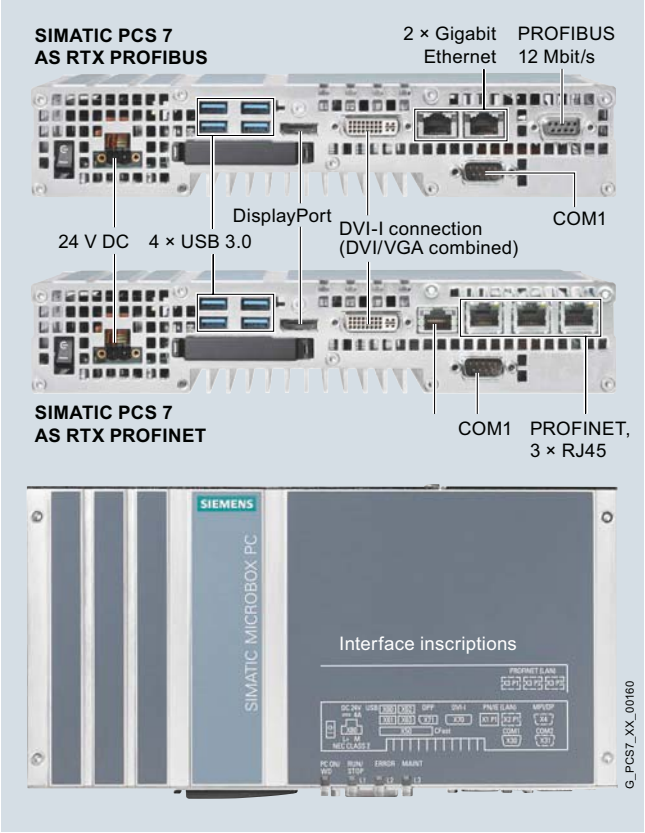

Design of the SIMATIC PCS 7 AS RTX

The two versions of the SIMATIC PCS 7 AS RTX Microbox automation system, (PROFIBUS/PROFINET), are based on a SIMATIC IPC427D with a system-specific configuration.

The compact design and flexible installation options of the SIMATIC IPC427D (DIN rail, wall or portrait mounting in horizontal or vertical orientation) support space-saving designs of SIMATIC PCS 7 plants. A DIN rail and bracket for wall mounting are supplied with SIMATIC PCS 7 AS RTX (PROFIBUS/PROFINET).

The following are pre-installed on the built-in solid state disk (SATA SSD 80 GB, eMLC):

- Windows 7 Ultimate 32-bit operating system, multi-language (English, German, French, Italian, Spanish, Chinese)
- WinAC RTX 2010 controller software
- SIMATIC IPC DiagMonitor diagnostics software

The pre-installed software is also supplied on a Restore DVD.

The SIMATIC PCS 7 AS RTX has an integral power supply with electrical isolation.

Design (continued)

Configurable monitoring functions can be recorded and evaluated via SIMATIC IPC DiagMonitor and SIMATIC PCS 7 Maintenance Station. These monitoring functions include:

- Program execution (watchdog)
- Processor and board temperatures
- Enhanced diagnostics/messages, e.g. operating hours counter, hard disk status or system status, backup battery status

The "Power" and "Watchdog" signals are displayed on LEDs.

One (SIMATIC PCS 7 AS RTX PROFINET) or two (SIMATIC PCS 7 AS RTX PROFIBUS) Ethernet interfaces 10/100/1000 Mbps (RJ45) are available for the plant bus communication with the engineering station, operator stations, maintenance station and other SIMATIC PCS 7 system components.

ET 200M, ET 200iSP, ET 200S and ET 200pro remote I/O stations can be linked to a comprehensive range of low-cost signal/function modules as well as intelligent field/process devices on the PROFIBUS PA via the PROFIBUS DP interface integrated in SIMATIC PCS 7 AS RTX PROFIBUS. With this CP 5622-compatible interface, the SIMATIC PCS 7 AS RTX also supports routing from the engineering system up to the field devices connected via PROFIBUS.

With SIMATIC PCS 7 AS RTX PROFINET, the PROFIBUS interface is replaced by a PROFINET interface with 3 ports that are based on CP 1616. Sensors/actuators can thus be integrated in remote ET 200M or ET 200SP I/O stations via PROFINET IO.

The SIMATIC PCS 7 AS RTX is configured using the engineering system of the SIMATIC PCS 7 process control system.

The engineering system also administers the AS Runtime licenses of the SIMATIC PCS 7 AS RTX. The scope of delivery of the SIMATIC PCS 7 AS RTX already includes an AS Runtime license for 100 POs. This can be expanded by further AS Runtime licenses for 100 POs or 1 000 POs up to the limit of 2 000 POs. The process objects of additional AS Runtime licenses are then added to process objects which already exist.

Technical specifications

SIMATIC PCS 7 AS RTX (Microbox), based on SIMATIC IPC427D	
Design and equipment features	
Design versions	• SIMATIC PCS 7 AS RTX PROFIBUS • SIMATIC PCS 7 AS RTX PROFINET
Design	• Compact Microbox PC without panel • DIN rail or wall mounting; horizontal (preferred) or vertical • Portrait assembly; vertical
Degree of protection according to EN 60529 (front/rear)	IP20
CPU	
• Processor	Intel Core i7-3517UE 1.7 GHz
• Second Level Cache	4 MB
Main memory	4 GB DDR3-SDRAM 1066 (1 SO-DIMM module without ECC)
Graphics	
• Graphics controller	Intel HD4000 integrated in the chipset
• Graphics memory	32 ... 512 MB shared memory
• Resolutions, color-depth, frequencies	
- DVI-I	Up to 1920 × 1200, 60 Hz
- Display port (DPP)	Up to 1920 × 1200, 60 Hz
Storage Media	
• Solid state drive	1 × 2.5" SATA-SSD 80 GB (eMLC)
• CD-ROM / DVD-RW, diskette	Connectable via USB (not included in scope of delivery)

Interfaces	
• PROFIBUS/MPI (SIMATIC PCS 7 AS RTX PROFIBUS only)	CP 5622 onboard, 1 × 9-pin sub d socket. 12 Mbit/s (electrically isolated)
• PROFINET (SIMATIC PCS 7 AS RTX PROFINET only)	CP 1616 onboard, 3 × RJ45 socket; integrated 3-port real-time switch
• Ethernet	
- PCS 7 AS RTX PROFIBUS	2 × Ethernet ports (RJ45) Intel 82579LM and Intel 82574L; 10/100/1000 Mbit/s, electrically isolated, teaming-capable
- PCS 7 AS RTX PROFINET	1 × Ethernet port (RJ45); 10/100/1000 Mbit/s, isolated
• USB	4 × USB 3.0, max. 2 can be simultaneously operated as high current
• Serial	1 × COM1 RS 232, 115 Kbps max., 9-pin sub D connector
• Parallel	-
• Graphics connection	1 × DVI-I (DVI/VGA combined) 1 × DisplayPort (DPP); DVI via DPP-to-DVI adapter
• Keyboard, mouse	Connectable via USB (not included in scope of delivery)
LED displays	• PC ON/WD for power supply and watchdog • L1, L2 and L3 freely programmable by the user
Software (pre-installed and on Restore DVD)	
Operating system	Windows 7 Ultimate SP1, 32-bit, multi-language (English, German, French, Italian, Spanish, Chinese)
Controller software	WinAC RTX 2010
System-tested SIMATIC industrial software	SIMATIC IPC DiagMonitor

Technical specifications (continued)

Monitoring and diagnostic functions	
Watchdog	• Monitoring of program execution • Restart can be parameterized following faults • Monitoring time adjustable in the software
Temperature	• Processor • Basic module • Close to RAM (via SIMATIC IPC DiagMonitor and SIMATIC PCS 7 Asset Management)
Storage Media	S.M.A.R.T. functionality
Battery monitoring	Battery status register readable; residual life after reaching the warning level at least 1 month
Operating hours counter	(via SIMATIC IPC DiagMonitor and SIMATIC PCS 7 Asset Management)
Noise emission	
Operation	< 40 dB (A) to DIN 45635-1
Electromagnetic compatibility (EMC)	
Emitted interference	EN 61000-6-3, EN 61000-6-4, CISPR220 Class B FCC Class A
Immunity to conducted interference on the supply lines	± 2 kV (according to IEC 61000-4-4; burst) ± 1 kV (according to IEC 61000-4-5; symmetrical surge) ± 2 kV (according to IEC 61000-4-5; asymmetrical surge)
Immunity to interference on signal lines	± 1 kV (according to IEC 61000-4-4; burst; length < 3 m) ± 2 kV (according to IEC 61000-4-4; burst; length > 3 m) ± 2 kV (according to IEC 61000-4-5; surge; length > 30 m)
Immunity to static discharge	± 6 kV contact discharge ± 8 kV air discharge
Immunity to high-frequency irradiation	10 V/m, 80 ... 1 000 MHz and 1.4 ... 2 GHz, 80 % AM according to IEC 61000-4-3 1 V/m, 2 ... 2.7 GHz, 80 % AM according to IEC 61000-4-3 10 V, 10 kHz ... 80 MHz, 80 % AM according to IEC 61000-4-6
Immunity to magnetic fields	100 A/m; 50/60 Hz according to IEC 61000-4-8
Climatic conditions	
Temperature	Tested according to IEC 60068-2-1, IEC 60068-2-2, IEC 60068-2-14
• During operation, horizontal installation (preferred position)	
- Operation with SSD and max. 2 expansion modules (max. load 10 W)	0 ... +40 °C[1)]
- Operation with SSD in RAL[2)] and max. 2 expansion modules (max. load 10 W)	0 ... +50 °C[1)]
• During operation, vertical/portrait mounting	
- Operation with SSD (without expansion module)	0 ... +40 °C[1)]
- Operation with SSD in RAL[2)] and max. 2 expansion modules (max. load 10 W)	0 ... +45 °C[1)]
• Storage/transport (with SSD)	-40 ... +70 °C
• Gradient	
- During operation	Max. 10 °C/h
- Storage/transport	20 °C/h; no condensation
Relative humidity	Tested according to IEC 60068-2-78, IEC 60068-2-30
• During operation	5 ... 80 % at 25 °C (no condensation)
• Storage/transport	5 ... 95 % at 25 °C (no condensation)
Atmospheric pressure	Tested according to IEC 60068-2-78, IEC 60068-2-30
• During operation	1080 ... 795 hPa, corresponds to a elevation of -1 000 ... 2 000 m
• Storage/transport	1080 ... 660 hPa, corresponds to an elevation of -1 000 ... 3 500 m
Mechanical environmental conditions	
Vibrations	Tested according to IEC 60068-2-6
• During operation with SSD	5 ... 9 Hz: 3.5 mm 9 ... 500 Hz: 9.8 m/s²
• Storage/transport	5 ... 9 Hz: 3.5 mm, 9 ... 500 Hz: 9.8 m/s²
Shock	Tested according to IEC 60068-2-27
• During operation with SSD	150 m/s², 11 ms
• Storage/transport	250 m/s², 6 ms
Standards, specifications, approvals	
Protection class	Protection class I according to IEC 61140
CE in conformity with 2004/108/EC, 2006/95/EC	Yes
Area of application: Industry	
• Interference emission	EN 61000-6-4: 2007
• Noise immunity	EN 61000-6-2: 2005
Area of application: Residential, business, trade, small enterprise	
• Emitted interference	EN 61000-6-3: 2007
• Noise immunity	EN 61000-6-1: 2007
cULus	Underwriters Laboratories (UL) according to Standard UL 60950-1 and UL 508 as well as Canadian National Standard CAN/CSA-C22.2 No. 60950-1 (I.T.E) and CAN/CSA-C22.2 No. 142 (IND.CONT.EQ)
USA: FCC Rules, Part 15, Class A	Yes
Canada: ICES-003, Class A; NMB-003, Class A	Yes
Australia/New Zealand: EN 61000-6-4:2007	Yes
Korea: Korean Certification (KC Mark)	Yes
Special features	
Quality assurance	according to ISO 9001
Power supply (electrically isolated)	
Power supply	24 V DC (19.2 ... 28.8 V)
Short-term voltage dip	Min. 15 ms (at 20.4 V) Max. 10 events per hour; recovery time of at least 1 s
Max. power consumption (at 24 V DC)	64.8 W
Dimensions and weights	
Dimensions (W x H x D in mm)	262 × 133 × 50.5
Weight	approx. 2 kg

1) If the "Turbo Mode Level" setting in BIOS Setup "Power" menu is not set to "Temperature optimized", the maximum ambient temperature must be reduced by 5 °C.

2) RAL = Restricted Access Location: Installation of device in operating environment with restricted access, e.g. a locked switchgear cabinet

Ordering data

	Article No.
SIMATIC PCS 7 AS RTX PROFIBUS Assembled and pre-installed SIMATIC PCS 7 automation system based on SIMATIC IPC427D, prepared for connection of the process I/O via PROFIBUS DP; with: • Intel Core I7-3517UE, 2 × 1.7 GHz, 4 MB Second Level Cache; 4.0 GB DDR3 SDRAM 1066 (1 SO-DIMM module); SSD SATA, 80 GB, 2 × Ethernet 10/100/1000 Mbps (RJ45) onboard, 1 × CP 5622 onboard; 4 × USB 3.0 (high current); 24 V DC power supply • Windows 7 Ultimate 32-bit operating system, multi-language (English, German, French, Italian, Spanish, Chinese), WinAC RTX 2010 controller software and SIMATIC IPC DiagMonitor diagnostic software, pre-installed on SSD 80 GB and restore DVD • Mounting hardware: DIN rail and bracket for wall mounting • SIMATIC PCS 7 AS Runtime license for 100 PO	**6ES7654-0UE23-0XX1**
SIMATIC PCS 7 AS RTX PROFINET Assembled and pre-installed SIMATIC PCS 7 automation system based on SIMATIC IPC427D, prepared for connection of the process I/O via PROFINET IO; with: • Intel Core I7-3517UE, 2 × 1.7 GHz, 4 MB second level cache; 4.0 GB DDR3 SDRAM 1066 (1 SO-DIMM module); SSD SATA, 80 GB, 1 × Ethernet 10/100/1000 Mbps (RJ45) onboard, 1 × CP 1616 onboard (3 ports); 4 × USB 3.0 (high current); 24 V DC power supply • Windows 7 Ultimate 32-bit operating system, multi-language (English, German, French, Italian, Spanish, Chinese), WinAC RTX 2010 controller software and SIMATIC IPC DiagMonitor diagnostic software, pre-installed on SSD 80 GB and restore DVD • Mounting hardware: DIN rail and bracket for wall mounting • SIMATIC PCS 7 AS Runtime license for 100 PO	**6ES7654-0UE23-0XX2**

	Article No.
Additional and expansion components	
SIMATIC PCS 7 AS Runtime license (can be added to existing licenses) Language-neutral, floating license for 1 user No SIMATIC PCS 7 Software Media Package • Physical delivery License key on USB flash drive, certificate of license	
- 100 POs	**6ES7653-2BA00-0XB5**
- 1 000 POs	**6ES7653-2BB00-0XB5**
• Online delivery License key download, online certificate of license Note: E-mail address required!	
- 100 POs	**6ES7653-2BA00-0XH5**
- 1 000 POs	**6ES7653-2BB00-0XH5**
Portrait mounting	
Portrait assembly kit For space-saving installation of the SIMATIC PCS 7 AS RTX based on SIMATIC IPC427D (ports at front)	**6ES7648-1AA20-0YP0**

Accessories

Portrait assembly kit

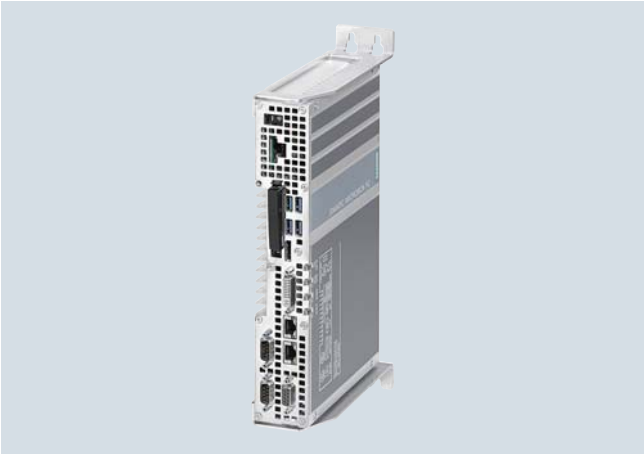

SIMATIC PCS 7 AS RTX with portrait assembly kit, interfaces at front

The portrait mounting kit allows space-saving installation of the SIMATIC PCS 7 AS RTX in the control cabinet. The technical specifications correspond in this design form to those with a vertical standard rail mounting.

Portrait mounting reduces the mounting area required (W × H in mm) from 262 × 133 to 61.5 × 315. Together with the kit, the SIMATIC PCS 7 AS RTX requires a mounting depth of 149.7 mm in the control cabinet. Since all ports of the SIMATIC PCS 7 AS RTX are accessible from the front, this type of mounting is very convenient for commissioning.

When using the portrait mounting kit for the SIMATIC PCS 7 AS RTX, read also the information on operation planning and device installation in the "SIMATIC IPC427D Industrial PC" manual.

Overview

		PCS 7 BOX RTX		PCS 7 BOX	
		ES/OS system	OS Runtime	ES/OS system	OS Runtime
System functionality		ES + OS + AS	OS + AS	ES + OS	OS
Possible controller combinations	WinAC RTX controller integrated				
	PCS 7 AS RTX PROFIBUS or PCS 7 AS RTX PROFINET as additional controller			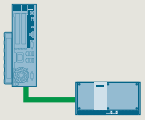	
	Modular AS 41x, AS 41xH or AS 41xF (AS Single or AS Redundancy Station) as additional controller			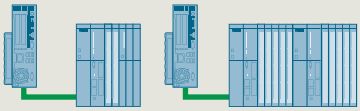	

System overview of SIMATIC PCS 7 BOX compact systems

SIMATIC PCS 7 BOX are space-saving and at the same time very rugged industrial PC systems for economical entry into process automation with SIMATIC PCS 7. They are available as compact systems with SIMATIC PCS 7 functionality for engineering (ES), automation (AS), operator control and monitoring (OS), and also as OS Runtime systems without an engineering component.

SIMATIC PCS 7 BOX for operation as a client in an operator system or in SIMATIC BATCH can be found in the section "Industrial Workstation/IPC" under "SIMATIC BOX PC", page 3/35.

Product versions

The first criterion for choosing the offered SIMATIC PCS 7 BOX product versions is the decision between integrated or swapped-out automation functionality (AS):

- **AS integrated**:
  SIMATIC PCS 7 BOX RTX with internal WinAC RTX software controller and Windows 7 Ultimate SP1 (32-bit) operating system; optionally with integrated PROFIBUS or PROFINET interface
- **AS separate**:
  SIMATIC PCS 7 BOX with Windows 7 Ultimate SP1 (64-bit) operating system and external controller:
  - Microbox automation system as SIMATIC PCS 7 AS RTX PROFIBUS or SIMATIC PCS 7 AS RTX PROFINET
  - Modular automation system of the S7-400 series, including PROFIBUS and PROFINET interface, as AS Single Station or AS Redundancy Station

This selection is associated with the decision for a specific controller type. It depends on the price/performance ratio as well as on the hardware and software functions that are possible with the various controller combinations (see table in page 9/6).

Depending on the integration of the engineering component (ES) in the system functionality, there is then a further differentiation within the preselection:

- ES/OS system:
  - SIMATIC PCS 7 BOX RTX with ES + OS + AS functionality
  - SIMATIC PCS 7 BOX with ES + OS functionality
- OS Runtime system:
  - SIMATIC PCS 7 BOX RTX with OS + AS functionality
  - SIMATIC PCS 7 BOX with OS functionality

A complete process control system for small applications can be implemented by expanding further with process I/O:

- Distributed process I/O at PROFIBUS: Sensors/actuators on ET 200M, ET 200iSP, ET 200S and ET 200pro remote I/O stations, as well as directly connected field devices/process devices (with WinAC RTX and in combination with PCS 7 AS RTX PROFIBUS or AS S7-400)
- Field devices/process devices at FOUNDATION Fieldbus (in combination with AS S7-400)
- Distributed process I/O at PROFINET: Sensors/actuators on ET 200M and ET 200SP remote I/O stations, as well as directly connected field devices/process devices (with WinAC RTX as well as in combination with AS S7-400 or PCS 7 AS RTX PROFINET)

Application

The SIMATIC PCS 7 BOX compact systems are ideally suitable for use at process level, especially for:

- Small production applications
- Enclosed subprocesses (package units)
- Automation of a laboratory or test center

As fully-fledged members of the SIMATIC PCS 7 family, SIMATIC PCS 7 BOX systems work with the PCS 7 standard system software; they are scalable and can be extended without a break in compatibility.

The application is limited to 2 000 POs (process objects) in accordance with the Engineering and OS Runtime licenses. The max. number of POs of the AS Runtime licenses depends on the type of controller (for more information on this, see below under "Design", software and licenses).

As an ES/OS system, expanded by software licenses that can be ordered separately for SIMATIC PDM and SIMATIC PCS 7 Maintenance Station, SIMATIC PCS 7 BOX can also be operated as a maintenance station. For additional information on this, please refer to the chapter "Plant Device Management".

SIMATIC PCS 7 BOX systems with a separate, external controller are additionally suitable for SIMATIC BATCH (up to 10 units) or as a Web server (Windows 7 Ultimate 64-bit operating system) for up to two Web clients.

Design

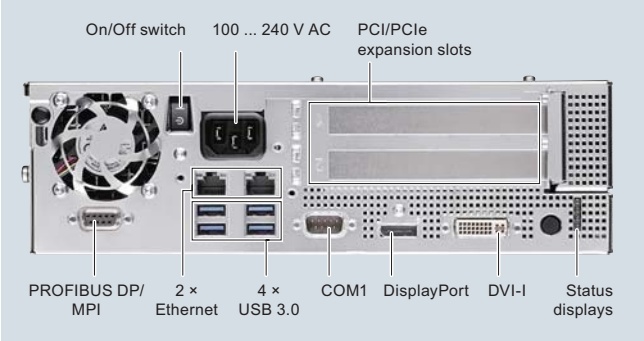

SIMATIC PCS 7 BOX RTX design

System platform for all offered SIMATIC PCS 7 BOX product versions is the sturdy industrial SIMATIC IPC627D which can be used in accordance with its CE marking in industrial environments as well as in domestic, business and commercial environments.

Special properties and equipment features

The SIMATIC Box PC, based on Intel Core i3 or Xeon processor technology combines high performance with compact design. Additionally, it has the following features:

- Stable platform available for a period of about 5 years with embedded Intel components (spare parts supply and repairs for approx. 5 years)
- Rugged metal enclosure with IP20 degree of protection with high electromagnetic compatibility.
- Powerful and energy-saving Intel multi-core processors XEON E3 or Core i3
- Powerful Intel graphics controller HD Graphics 4600 onboard, integrated in the processor:
  - 2 digital interfaces DVI-I and DisplayPort (DVI-D via DisplayPort DVI adapter)
  - Analog VGA connection via DVI-I adapter to VGA or DisplayPort to VGA
- Support of multi-monitor mode with two process monitors via onboard graphics:
  - 1 × process monitor at DVI-I connection
  - 1 × process monitor at DisplayPort via DisplayPort to DVI-D adapter cable
- Alternative design version of panel front: SIMATIC PCS 7 BOX with fixed 22" TFT display with touch screen, resolution 1920 × 1080
- Flexible installation in various positions with mounting brackets or portrait installation kits
- High shock/vibration resistance in all possible mounting positions
- Variable power supply: 24 V DC or 110/230 V AC (100 ... 240 V)
- Maximum processor performance up to an ambient temperature of 55 °C
- Integrated drives:
  - 1 × optical drive SATA DVD±R/RW or as alternative:
  - 1 × hard disk SATA 3.5" (HDD), 250 GB
  - 1 × Solid State Drive SATA 2.5" (SSD), 240 GB
  - 1 × RAID 1, 320 GB (2 × 320 GB HDD, mirror disks)
- Numerous high-performance interfaces:
  - 4 × USB 3.0 (SuperSpeed), external
  - 1 × USB 3.0 (SuperSpeed), internal, e.g. for ASIA license key, hardlock USB
  - 1 × USB 3.0 (SuperSpeed) external, on front (Panel Front design version only)
  - 1 × serial (COM1)
  - 1 × DVI-I interface (DVI/VGA combined; VGA via adapter cable)
  - 1 × DisplayPort (DVI-D or VGA via adapter cable)
  - 2 × Ethernet 10/100/1000 Mbps (RJ45)
  - 1 x PROFIBUS DP (CP 5622-compatible)
  - 1 × PROFINET IO (CP 1616-compatible; alternative to PROFIBUS DP)
  - 1 × PCI-Express x16 (185 mm) and 1 × PCI (185 mm), vacant for expansions
- Integrated diagnostic displays (4 dual-color LEDs for status display of the operating state)
- Monitoring and diagnostics functions available in combination with the SIMATIC IPC DiagMonitor diagnostics software for:
  - Temperatures
  - Backup battery voltage
  - HDD/SSD status (S.M.A.R.T.)
  - System status (Watchdog)
  - Fan speed
  - Operating hours counter
- Certification for worldwide marketing (cULus)
- Fast restoration of the delivery state with supplied restore DVD

Product version SIMATIC PCS 7 BOX RTX

A WinAC RTX 2010 software controller is already integrated in the SIMATIC PCS 7 BOX RTX. The SIMATIC PCS 7 BOX product version with integrated controller is characterized by an exceptionally good price/performance ratio and very fast program execution. The controller generates only a low base load, and shows its strengths particularly with applications that involve real-time requirements and deterministic dynamic response.

In a direct comparison, product versions with external controllers offer slightly more functionality, resulting in additional application possibilities (see table in the section "Function").

Design (continued)

Design versions/expandability

The SIMATIC PCS 7 BOX in standard design is a compact computing unit with HMI devices (mouse, keyboard, process monitor) that can be ordered separately and are connected by means of integrated ports/interfaces.

The device is equipped with four USB 3.0 ports for mouse and keyboard as well as additional USB input/output devices, e.g. chip card reader USB.

Two process monitors can be controlled in multi-monitor mode via the integrated digital graphic interfaces DVI-I and DVI-D (via adapter cable at the DisplayPort). The selection of the process monitors depends on the technical data of the integrated graphics as well as the image formats and resolutions which can be adjusted in the project editor of the OS software (see section: Operator System, OS Software, Introduction).

As an alternative to the SIMATIC PCS 7 BOX in standard design, we are offering a built-in unit with Panel Front according to SIMATIC IPC677D which can be mounted in mounting cutouts of control cabinets, enclosures or consoles as well as on swivel arms.

With the built-in unit, a panel with 22" TFT display and touch screen is permanently connected with the computing unit. The 22" TFT display has a resolution of 1920 × 1080 pixels. An additional USB 3.0 port for connection of external I/O devices is available on the panel front on the left below the display.

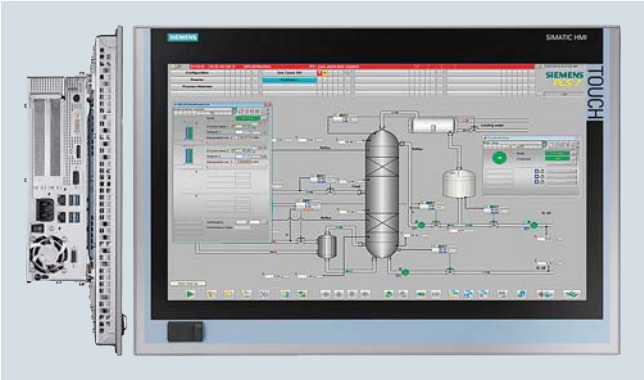

SIMATIC PCS 7 BOX with Panel Front, side and front views

Stand-alone operation/plant network

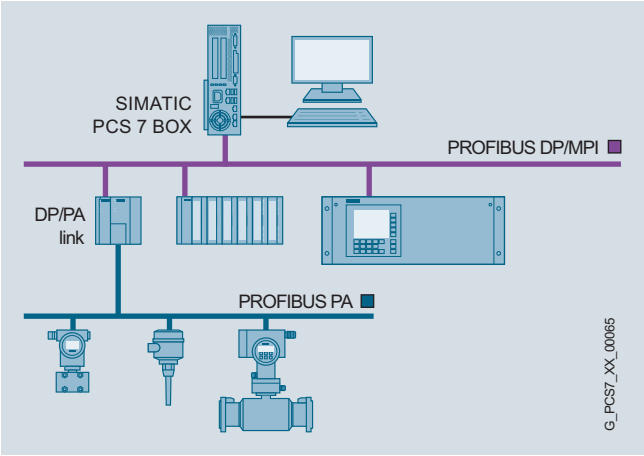

SIMATIC PCS 7 BOX in stand-alone mode

SIMATIC PCS 7 BOX systems can be operated in stand-alone mode and also in the system network with other SIMATIC PCS 7 system components.

A system produced with the SIMATIC PCS 7 BOX can be expanded at any time with additional SIMATIC PCS 7 hardware and software components. It is just as easy to integrate SIMATIC PCS 7 BOX into existing SIMATIC PCS 7 systems. The connections to the plant bus and terminal bus are usually made via the integrated Ethernet interfaces.

In association with the redundant AS 41xH modular controllers, however, an additional CP 1623, CP 1628 or CP 1613 A2 communication module with appropriate communications software is required for the Industrial Ethernet plant bus (see section Communication, Industrial Ethernet, System connection of PCS 7). This can be operated at an expansion slot of the appropriate interface type: PCI Express (CP 1623/1628) or PCI (CP 1613 A2).

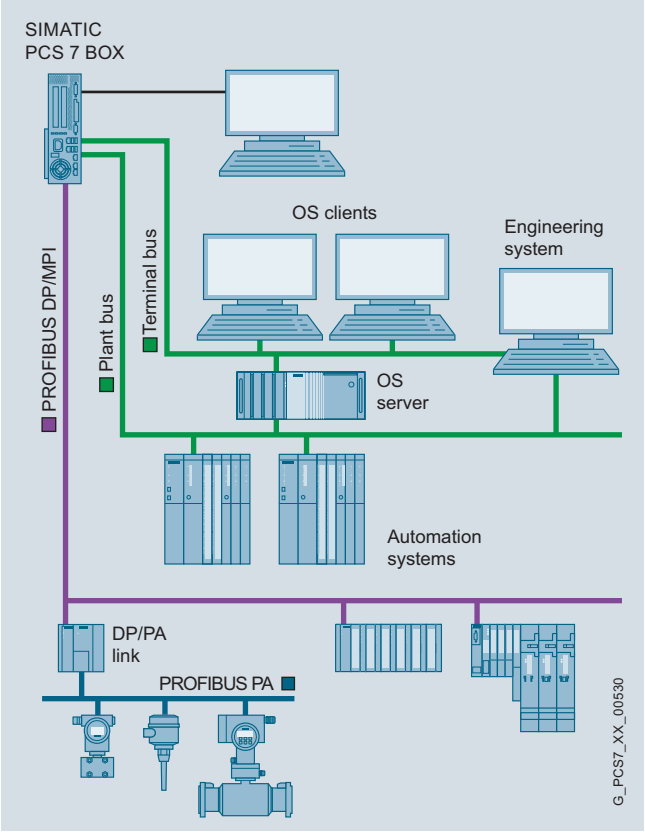

Example of SIMATIC PCS 7 BOX integration in a SIMATIC PCS 7 plant network

Engineering

The SIMATIC PCS 7 BOX can be configured by using either the engineering software integrated in the system or a central engineering system. OS-specific configuration changes can be loaded online, i.e. terminated without the OS process mode.

Individual product configuration

By selecting predefined equipment features, you can individually configure the SIMATIC PCS 7 BOX with the desired article numbers. To do so, selection tables are available from page 9/11.

A configurator in the Industry Mall allows you to interactively select and order SIMATIC PCS 7 BOX compact systems.

Design (continued)

Software and licenses

	PCS 7 BOX RTX		PCS 7 BOX		
	ES/OS system	OS Runtime	ES/OS system	OS Runtime	PC spare part
Article No.	6ES7650-4B..0-2**L**..	6ES7650-4B..0-2**M**..	6ES7650-4B.81-2**N**..	6ES7650-4B.81-2**P**..	6ES7650-4B…-8**X**..
System functionality	ES + OS + AS	OS + AS	ES + OS	OS	None (without PCS 7 software/licenses)
Supplied PCS 7 software/licenses (incl. SP)					
SIMATIC PCS 7 Runtime license RTX, Article No. 6ES7650-1CL00-2XB5	●	●			
SIMATIC WinAC RTX 2010, Article No. 6ES7671-0RC08-0YA0	●	●			
SIMATIC PCS 7 ES Single Station V8.2, with 250 AS/OS Runtime POs, Article No. 6ES7651-5AA28-0YA0	●		●		
SIMATIC PCS 7 OS Software Single Station V8.2 (250 OS Runtime POs), analog Article No. 6ES7658-2AA28-0YA0 but with 250 OS Runtime POs		●		●	
SIMATIC PCS 7 AS Runtime license for 250 AS RT POs		●			
SIMATIC PCS 7 BCE V8.2 Runtime license, Article No. 6ES7650-1CD28-2YB5			●	●	
SIMATIC PCS 7 V8.2 Software Media Package, Article No. 6ES7658-4XX28-0YT8	●	●	●	●	
Software types of delivery					
Preinstallation on system hard disk corresponds to content of restore DVD Set 1	●	●			
Preinstallation on system hard disk corresponds to content of restore DVD Set 2			●	●	
Restore DVD Set 1[1]: Windows 7 Ultimate SP1, 32-bit operating system with default settings for optimized PCS 7 operation including PCS 7 software installation for SIMATIC PCS 7 BOX operation	●	●			
Restore DVD Set 2[1]: Windows 7 Ultimate 64-bit operating system with default settings for optimized PCS 7 operation including PCS 7 software installation for SIMATIC PCS 7 BOX operation			●	●	
Recovery CD Windows 7 Ultimate SP1 operating system, either 32-bit or 64-bit					●

[1] Within the restore DVD sets, you also have the option of installing purely the operating system including drivers and default settings for optimized PCS 7 operation, but without PCS 7 software.

Software and licenses of the SIMATIC PCS 7 BOX product versions

On delivery, the individual SIMATIC PCS 7 BOX product versions are equipped as follows with process objects for process mode:

Product version	Engineering POs	Runtime POs	
	AS and OS	AS	OS
SIMATIC PCS 7 BOX RTX ES/OS system	unlimited	250	250
SIMATIC PCS 7 BOX RTX OS Runtime	unlimited	250	250
SIMATIC PCS 7 BOX ES/OS System	unlimited	250	250
SIMATIC PCS 7 BOX OS Runtime	unlimited	–	250
SIMATIC PCS 7 BOX spare part (without licenses, without preinstallation)	–	–	–

The OS Runtime licenses of the SIMATIC PCS 7 BOX product versions are limited according to the envisaged field of application to 2 000 POs (process objects). The limit for the AS Runtime PO is defined by the type of controller. Type-specific limit data can be found in the table "Typical mixed configuration limits" in Section "Automation systems", section "Introduction", in the selection tables of the AS ordering data, and in the SIMATIC PCS 7 AS Single Station and SIMATIC PCS 7 AS Redundancy Station configurators. The engineering license for AS and OS is always unlimited.

The supplied OS Runtime POs can be extended by cumulative OS Runtime licenses for 100 and 1 000 POs up to the upper limit of 2 000 POs. Analogous to this, SIMATIC PCS 7 BOX product versions with integrated or separate automation functionality of the upper limit of the controller can be expanded by cumulative AS Runtime licenses for 100 and 1 000 POs.

Function

System configuration	PCS 7 BOX RTX			
		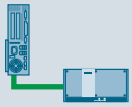	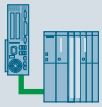	
	WinAC RTX controller integrated	**PCS 7 AS RTX PROFIBUS/ PROFINET (Microbox) as separate controller**	**Modular AS 41x (AS Single Station) as separate controller**	**Modular AS 41xH or AS 41xF (AS Single Station or AS Redundancy Station) as separate controller**
Supported functions and limits:				
Software				
AS/OS Engineering	●	●	●	●
OS Runtime Single Station up to 2 000 OS Runtime PO	●	●	●	●
PCS 7 APL	●	●	●	●
SIMATIC PDM PCS 7	●	●	●	●
SIMATIC PCS 7 Maintenance Station	●	●	●	●
SIMATIC BATCH up to 10 units		●	●	●
Web server, for up to 2 Web clients		●	●	●
OS Single Station Redundancy		●	●	●
S7 F Systems				●
SIMATIC Safety Matrix				●
Hardware				
Controller (AS) independent of the BOX PC system		●	●	●
AS-to-AS communication	●	●	●	●
Routing	●[1)]	●[1)2)]	●	●
PROFIBUS DP/PA	●	● (PCS 7 AS RTX PROFIBUS)	●	●
FOUNDATION Fieldbus (FF)			●	●
PROFINET IO	●	● (PCS 7 AS RTX PROFINET)	●	●
Configuration in RUN (CiR)			●	●
High-precision time stamps			●	●
S7 Block Privacy			●	●
Block type change in Run (TCiR)			● (AS 410)	● (AS 410)
Retentive AS data	Only with UPS	Only with UPS		
Max. AS quantity structure[3)]	WinAC RTX 2010 up to 1 200 AS Runtime PO	WinAC RTX 2010 up to 1 200 AS Runtime PO	Depending on the type of the AS 41x, up to 2 000 AS Runtime PO	Depending on the type of the AS 41xH or AS 41xF, up to 2 000 AS Runtime PO

1) The PROFIBUS routing functionality of the WinAC RTX 2010 can only be used with the onboard CP 5622 of the SIMATIC IPC627D (PCS 7 BOX RTX) and IPC427D (PCS 7 AS RTX PROFIBUS).

2) The PROFINET routing functionality of the WinAC RTX 2010 can only be used with the on-board CP 1616 of the SIMATIC IPC427D (PCS 7 AS RTX PROFINET).

3) Typical mixed quantity structures based on the SIMATIC PCS 7 Advanced Process Library (APL)

Supported hardware and software functionality depending on the system configuration

Technical specifications

SIMATIC PCS 7 BOX basic hardware: SIMATIC IPC627D	Standard design	Panel front design
Design and equipment features		
Design	Rack-mountable device with sturdy metal enclosure, suitable for wall and portrait mounting	Rack-mounted device with rugged metal enclosure and Panel Front, suitable for mounting in control cabinets, enclosures, consoles and on swivel arms; max. mounting angle ±20° from the vertical
Degree of protection	IP20	Computer unit and rear of panel IP20; panel front IP65
Processor	• Intel Xeon E3-1268L v3, 4 cores, 8 threads, 2.3 (3.3) GHz, GT2, 8 MB cache, Turbo Boost, VT-d, iAMT • Intel Core i3-4330TE, 2 cores, 4 threads, 2.4 GHz, GT2, 4 MB cache, VT-x	
Chipset	Intel C226 (DH82C226 PCH)	
Main memory		
• Type	DDR3-1600 SDRAM (PC3-12800) DIMM	
• Maximum configuration	16 GB DDR3 SDRAM (2 sockets)	
• Standard configuration	Alternatives: • 8 GB DDR3 SDRAM without ECC • 8 GB DDR3 SDRAM with ECC	
Graphics		
• Graphic controller	Onboard Intel graphics controller HD Graphics P4600; 2-D and 3-D engine integrated in processor	
• Graphics memory	Dynamic Video Memory (uses up to 512 MB RAM)	
• Resolutions, frequencies, colors of the onboard graphics		
- DVI	1920 × 1200 at 60 Hz, 24-bit color depth	
- Display port	3840 × 2160 at 130 Hz, 30-bit color depth	
• Color display (panel front)	–	22" TFT display with touch screen
- Resolution (W × H in pixels)	–	1920 × 1080
- Luminance (cd/m²), up to	–	400
- Horizontal/vertical viewing angle	–	170°/170°
- MTBF LED backlight	–	80 000 h
Free expansion slots	1 × PCI (185 mm) 1 × PCI Express x16 (185 mm)	
RAID controller	Intel PCH RAID controller onboard with Intel Rapid Storage Technology	
Drives		
• Hard disk (HDD)/ Solid State Drive (SSD), alternatives	• 1 × 3.5" HDD SATA, 250 GB • 1 × 2.5" SSD SATA, 240 GB • 320 GB RAID 1 (2 × 320 GB HDD SATA, data mirroring)	
• Optical drive	1 × Slimline SATA DVD±R/RW	
• Floppy disk drive	No (can be connected with USB; not included in the scope of delivery)	
Interfaces		
PROFIBUS/MPI, isolated		
• Version	1 × 9-pin sub D socket, CP 5622-compatible	
• Transmission rate	9.6 kbps to 12 Mbps	
PROFINET, isolated (alternative to PROFIBUS/MPI)	3 × 10/100 Mbps, (RJ45), CP 1616-compatible	
Ethernet	2 × 10/100/1000 Mbps (RJ45), Intel WGI217LM (AMT interface) and Intel WGI210IT	
USB		
• External	4 × USB 3.0 (max. 2 high-current at the same time)	4 × USB 3.0 (max. 2 high-current at the same time) 1 × USB 3.0 high-current on Panel Front
• Internal	1 × USB 3.0 high-current for internal USB flash drive/dongle	
Serial	1 × COM1 (V.24), 9-pin sub-D connector	
Parallel	–	
Graphics connection	• 1 × DVI-I (DVI/VGA combined) • 1 × DisplayPort	
Keyboard, mouse	Connectable via USB (keyboard and mouse not included in scope of delivery)	

Technical specifications (continued)

SIMATIC PCS 7 BOX basic hardware: SIMATIC IPC627D	Standard design	Panel front design
Operating system and diagnostics software		
Operating system • SIMATIC PCS 7 BOX RTX • SIMATIC PCS 7 BOX	 Windows 7 Ultimate SP1 (32-bit), multi-language (English, German, French, Italian, Spanish, Chinese), pre-installed on hard disk and enclosed on restore DVD, no activation required Windows 7 Ultimate SP1 (64-bit), multi-language (English, German, French, Italian, Spanish, Chinese), pre-installed on hard disk and enclosed on restore DVD, no activation required	
System-tested SIMATIC industrial software	SIMATIC IPC DiagMonitor	
Monitoring and diagnostics functions		
Display elements	4 × dual-color LEDs for status display of the operating state: • PC ON/WD (Watchdog) • RUN/STOP • ERROR • MAINT	
SIMATIC IPC DiagMonitor diagnostics software • Temperature (overtemperature/undertemperature) • Battery voltage • Storage Media • Watchdog	 • Processor temperature • Temperature close to the RAM chips • Temperature of the basic module Backup battery Monitoring of HDD/SSD with S.M.A.R.T. functionality System monitoring; possible reactions: Hardware or software reset	
Fans	Monitoring of the fan speed	
Operating hours counter	Information about the total runtime	
Safety		
Protection class	Protection class I according to IEC 61140	
Safety directives	EN 60950-1; UL60950-1 CAN/CSA C22.2 No 60950-1-07 UL508 CSA C22.2 No. 142	EN 60950-1 UL508 CSA C22.2 No. 142
Noise emission		
Operation	< 55 dB(A) according to EN ISO 7779	
Electromagnetic compatibility (EMC)		
Interference emission	EN 61000-6-3 EN 61000-6-4 CISPR22 class B FCC class A	EN 61000-6-3 EN 61000-6-4 CISPR22 class A FCC class A
Immunity to conducted interference on the supply lines	±2 kV (according to IEC 61000-4-4; burst) ±1 kV (according to IEC 61000-4-5; symmetrical surge) ±2 kV (according to IEC 61000-4-5; asymmetrical surge)	
Immunity to interference on signal lines	±1 kV; (according to IEC 61000-4-4; burst; length < 3 m) ±2 kV; (according to IEC 61000-4-4; burst; length > 3 m) ±2 kV (according to IEC 61000-4-5; surge; length > 30 m)	
Immunity to static discharge	±6 kV contact discharge (according to IEC 61000-4-2) ±8 kV air discharge (according to IEC 61000-4-2)	
Immunity to radio frequency interference	10 V/m, 80 ... 1 000 MHz and 1.4 ... 2 GHz, 80 % AM (to IEC 61000-4-3) 3 V/m, 2 ... 2.7 GHz, 80 % AM (to IEC 61000-4-3) 10 V/m, 10 kHz ... 80 MHz, 80 % AM (to IEC 61000-4-6)	
Immunity to magnetic fields	100 A/m, 50/60 Hz (according to IEC 61000-4-8)	

Technical specifications (continued)

SIMATIC PCS 7 BOX basic hardware: SIMATIC IPC627D	Standard design	Panel front design
Climatic conditions		
Temperature	Tested according to IEC 60068-2-1, IEC 60068-2-2, IEC 60068-2-14	
• Operation	• +5 ... +45 °C (with DVD writer, only up to +40 °C) • +5 ... +50 °C (power USB and PCI/PCIe expansions max. 20 W) • +5 ... +55 °C (power USB and PCI/PCIe expansions max. 10 W)	• Horizontal, vertical installation: +5 ... +45 °C (with DVD writer, only up to +40 °C) • Horizontal, angled installation: +5 ... +40 °C (power USB and PCI/PCIe expansions max. 30 W; no DVD operation) • Vertical, vertical installation: +5 ... +45 °C (power USB and PCI/PCIe expansions max. 30 W; no DVD operation)
• Operation, with cabinet installation		
- External temperature 40 °C	–	• Internal temperature max. +50 °C (max. power of all slots 15 W)
- External temperature 45 °C	–	• Internal temperature max. +45°C with maximum configuration (power of all slots 30 W)
• Storage/transport	-20 … +60 °C	
• Gradient		
- Operation	Max. 10 °C/h	
- Storage	20 °C/h, no condensation	
Relative humidity	Tested according to IEC 60068-2-78, IEC 60068-2-30	
• Operation	5 ... 80 % at 25 °C (no condensation)	
• Storage/transport	5 ... 95 % at 25 °C (no condensation)	
Atmospheric pressure		
• Operation	1 080 to 795 hPa (corresponds to an altitude of 1 000 to 2 000 m)	
• Storage/transport	1 080 to 660 hPa (corresponds to an altitude of 1 000 to 3 500 m)	
Mechanical environmental conditions		
Vibrations	Tested according to IEC 60068-2-6	
• Operation	10 … 58 Hz: 0.075 mm / 58 … 500 Hz: 9.8 m/s²	
- Limitation with DVD writer	10 … 58 Hz: 0.019 mm / 58 … 500 Hz: 2.5 m/s²	
- Limitation with portrait assembly	10 … 58 Hz: 0.0375 mm / 58 … 500 Hz: 4.9 m/s²	–
• Storage/transport	5 … 9 Hz: 3.5 mm, 9 to 500 Hz: 9.8 m/s²	
Shock resistance	Tested according to IEC 60068-2-27, IEC 60068-2-29	
• Operation	50 m/s², 30 ms	
- Limitation with portrait assembly	25 m/s², 30 ms	–
• Storage/transport	250 m/s², 6 ms	
Standards, specifications, approvals		
CE - Residential, business and commercial operations, and small businesses		
• Interference emission	EN 61000-6-3: 2007 +A1:2011	–
• Noise immunity	EN 61000-6-1: 2007	–
CE industrial environment		
• Interference emission	EN 61000-6-4: 2007 +A1:2011	EN 61000-6-4: 2007
• Noise immunity	EN 61000-6-2: 2005	EN 61000-6-2: 2005
Certificates and approvals		
Quality assurance system according to ISO 9001:2008	According to DQS certificate 001323 QM08	
cULus	Underwriters Laboratories (UL) complying with standard UL 60950-1, CAN/CSA-C22.2 No. 60950-1 (I.T.E), UL 508 and CAN/CSA-C22.2 No. 142 (IND.CONT.EQ)	Underwriters Laboratories (UL) complying with standard UL 508 and CAN/CSA-C22.2 No. 142 (IND.CONT.EQ)
FCC USA	FCC Rules, Part 15, Class A	
Canada	ICES-003, Class B; NMB-003, Class B	ICES-003, Class A; NMB-003, Class A
Australia/New Zealand	EN 61000-6-3:2007	EN 61000-6-4:2007
Korea	Korean Certification (KC Mark)	

Technical specifications (continued)

SIMATIC PCS 7 BOX basic hardware: SIMATIC IPC627D	Standard design	Panel front design
Power supply		
Supply voltage (AC)	Nominal 100 ... 240 V AC (-15 %/+10 %), wide range	
Supply voltage (DC)	Nominal 24 V DC (-20 %/+20 %), SELV, isolated	
AC input current	Continuous current up to 1.7 A (up to 50 A for 1 ms at startup)	
DC input current	Continuous current up to 7.1 A (up to 14 A for 30 ms at startup)	
Brief voltage interruption according to NAMUR	max. 20 ms (at 0.85 rated voltage) (max. 10 events per hour; recovery time of at least 1 s)	
Max. power consumption • Active power (AC/DC) • Apparent power (AC)	 176 W 190 VA	
Max. current output (+12 V DC)	12.5 A	
Dimensions and weights		
External dimensions including DVD writer (W × H × D in mm)	312 × 267 × 105	560 × 380 × 139 (148 incl. front USB port)
Mounting cutout (W × H in mm)	–	541 × 362
Mounting depth including DVD writer (D in mm)	–	133
Weight	Approx. 7 kg	Approx. 16 kg
System software and licenses (incl. SP)		
SIMATIC PCS 7 BOX RTX ES/OS system (WinAC RTX 2010 integrated)	• SIMATIC PCS 7 ES Single Station V8.2, with 250 AS/OS Runtime POs • WinAC RTX 2010 and PCS 7 RTX license on USB flash drive	
PCS 7 BOX RTX OS Runtime (WinAC RTX 2010 integrated)	• SIMATIC PCS 7 OS Software Single Station V8.2 (250 OS Runtime POs) • SIMATIC PCS 7 AS Runtime license for 250 AS Runtime POs • WinAC RTX 2010 and PCS 7 RTX license on USB flash drive	
SIMATIC PCS 7 BOX ES/OS System	• SIMATIC PCS 7 ES Single Station V8.2, with 250 AS/OS Runtime POs • SIMATIC PCS 7 BCE V8.2 Runtime license	
SIMATIC PCS 7 BOX OS Runtime	• SIMATIC PCS 7 OS Software Single Station V8.2 (250 OS Runtime POs) • SIMATIC PCS 7 BCE V8.2 Runtime license	
Restore DVDs/preinstallation • Restore DVD Set 1 for SIMATIC PCS 7 BOX RTX	 Windows 7 Ultimate SP1 operating system (32-bit), multi-language (English, German, French, Italian, Spanish, Chinese), with default settings for optimized SIMATIC PCS 7 operation including PCS 7 software installation for SIMATIC PCS 7 BOX TRX	
• Restore DVD Set 2 for SIMATIC PCS 7 BOX	Windows 7 Ultimate SP1 operating system (64-bit), multi-language (English, German, French, Italian, Spanish, Chinese), with default settings for optimized SIMATIC PCS 7 operation including PCS 7 software installation for SIMATIC PCS 7 BOX	

Ordering data

SIMATIC PCS 7 BOX RTX (AS integrated)

	Article No.									
SIMATIC PCS 7 BOX System	**6ES7650-**									
PC type: SIMATIC IPC627D	**4**	**B**	■	■	**0**	**-**	**2**	■	■	■
2 × 10/100/1000 Mbps Ethernet RJ45; onboard graphics, 4 × USB 3.0; 1 × serial (COM1); 1 × PCI, 1 × PCIe (X16)										
SIMATIC PCS 7 software version V8.2 preinstalled										
Windows 7 Ultimate 32-bit operating system, multi-language (English, German, French, Italian, Spanish, Chinese)										
Processor and storage Media										
• Intel Core i3-4330TE processor (2 cores/ 4 threads, 2.4 GHz, 4 MB cache, VT-x); main memory 8 GB, DDR3 1600, DIMM; 250 GB HDD SATA; DVD±R/RW			**A**							
• Xeon E3-1268Lv3 processor (4 cores/8 threads, 2.3 (3.3) GHz, 8 MB cache, VT-d, AMT); main memory 8 GB DDR3 1600, DIMM; 240 GB SSD; DVD±R/RW			**B**							
• Xeon E3-1268Lv3 processor (4 cores/8 threads, 2.3 (3.3) GHz, 8 MB cache, VT-d, AMT); main memory 8 GB DDR3 1600, DIMM, ECC; RAID1, 2 × 320 GB SATA (2.5"); DVD±R/RW			**C**							
Communication interfaces										
• PROFIBUS onboard (CP 5622 compatible)				**0**						
• PROFINET onboard (CP 1616 compatible)				**1**						
System type										
• PCS 7 V8.2 BOX RTX ES/OS System (WinAC RTX 2010)								**L**		
• PCS 7 V8.2 BOX RTX OS Runtime (WinAC RTX 2010)								**M**		
Panel front										
• Without panel									**Q**	
• 22" Single Touch, 1920 × 1080 pixels									**B**	
Power supply, country-specific power supply cable										
• 110/230 V AC industrial power supply to NAMUR;										
- Power cord for Europe										**0**
- Power cord for UK										**1**
- Power cord for Switzerland										**2**
- Power cord for USA										**3**
- Power cord for Italy										**4**
- Power cord for China										**5**
• 24 V DC industrial power supply										**6**

SIMATIC PCS 7 BOX without WinAC RTX (AS separate)

	Article No.									
SIMATIC PCS 7 BOX System	**6ES7650-**									
PC type: SIMATIC IPC627D	**4**	**B**	■	**8**	**1**	**-**	**2**	■	■	■
2 × 10/100/1000 Mbps Ethernet RJ45; onboard graphics, 4 × USB 3.0; 1 × serial (COM1); 1 × PCI, 1 × PCIe (X16)										
SIMATIC PCS 7 software version V8.2 preinstalled										
Windows 7 Ultimate 64-bit operating system, multi-language (English, German, French, Italian, Spanish, Chinese)										
Without additional communications interfaces										
Processor and storage Media										
• Intel Core i3-4330TE processor (2 cores/ 4 threads, 2.4 GHz, 4 MB cache, VT-x); main memory 8 GB, DDR3 1600, DIMM; 250 GB SATA; DVD±R/RW			**A**							
• Xeon E3-1268Lv3 processor (4 cores/8 threads, 2.3 (3.3) GHz, 8 MB cache, VT-d, AMT); main memory 8 GB DDR3 1600, DIMM; 240 GB SSD; DVD±R/RW			**B**							
• Xeon E3-1268Lv3 processor (4 cores/8 threads, 2.3 (3.3) GHz, 8 MB cache, VT-d, AMT); main memory 8 GB DDR3 1600, DIMM, ECC; RAID1, 2 × 320 GB SATA (2.5"); DVD±R/RW			**C**							
System type										
• PCS 7 V8.2 BOX ES/OS System								**N**		
• PCS 7 V8.2 BOX OS Runtime								**P**		
Panel front										
• Without panel									**Q**	
• 22" Single Touch, 1920 × 1080 pixels									**B**	
Power supply, country-specific power supply cable										
• 110/230 V AC industrial power supply to NAMUR;										
- Power supply cord for Europe										**0**
- Power supply cord for the UK										**1**
- Power supply cord for Switzerland										**2**
- Power supply cord for USA										**3**
- Power supply cord for Italy										**4**
- Power supply cord for China										**5**
• 24 V DC industrial power supply										**6**

Ordering data (continued)

SIMATIC PCS 7 BOX System as a spare part

	Article No.									
SIMATIC PCS 7 BOX PC spare part PC type: SIMATIC IPC627D 2 × 10/100/1000 Mbps Ethernet RJ45; onboard graphics, 4 × USB 3.0; 1 × serial (COM1); 1 × PCI, 1 × PCIe (X16) Without pre-installation, without SIMATIC PCS 7 restore DVDs	**6ES7650-**									
	4	**B**	■	■	■	**-**	**8**	**X**	■	■
Processor and storage Media										
• Intel Core i3-4330TE processor (2 cores/ 4 threads, 2.4 GHz, 4 MB cache, VT-x); main memory 8 GB, DDR3 1600, DIMM; 250 GB SATA; DVD±R/RW			**Q**							
• Xeon E3-1268Lv3 processor (4 cores/8 threads, 2.3 (3.3) GHz, 8 MB cache, VT-d, AMT); main memory 8 GB DDR3 1600, DIMM; 240 GB SSD; DVD±R/RW			**B**							
• Xeon E3-1268Lv3 processor (4 cores/8 threads, 2.3 (3.3) GHz, 8 MB cache, VT-d, AMT); main memory 8 GB DDR3 1600, DIMM, ECC; RAID1, 2 × 320 GB SATA (2.5"); DVD±R/RW			**C**							
Communication interfaces										
• PROFIBUS onboard (CP 5622 compatible)				**0**						
• PROFINET onboard (CP 1616 compatible)				**1**						
• Without additional communication modules				**8**						
Operating system										
• Windows 7 Ultimate 32-bit, multi-language (English, German, French, Italian, Spanish, Chinese)					**0**					
• Windows 7 Ultimate 64-bit, multi-language (English, German, French, Italian, Spanish, Chinese)					**1**					
• Without operating system					**8**					
Panel front										
• Without panel									**Q**	
• 22" Single Touch, 1920 × 1080 pixels									**B**	
Power supply, country-specific power supply cable										
• 110/230 V AC industrial power supply to NAMUR;										
- Power supply cord for Europe										**0**
- Power supply cord for the UK										**1**
- Power supply cord for Switzerland										**2**
- Power supply cord for USA										**3**
- Power supply cord for Italy										**4**
- Power supply cord for China										**5**
• 24 V DC industrial power supply										**6**

Additional and expansion components

Additional and expansion components	
Runtime licenses for PO expansion	
SIMATIC PCS 7 OS Runtime license (cumulative) For extending the OS Runtime POs Language-neutral, software class A, single license for 1 installation No SIMATIC PCS 7 Software Media Package	
• Physical delivery License key on USB flash drive, certificate of license	
- 100 POs	**6ES7658-2XA00-0XB0**
- 1 000 POs	**6ES7658-2XB00-0XB0**
• Online delivery License key download, online certificate of license Note: E-mail address required!	
- 100 POs	**6ES7658-2XA00-0XH0**
- 1 000 POs	**6ES7658-2XB00-0XH0**
SIMATIC PCS 7 AS Runtime license (cumulative) Language-neutral, floating license for 1 user No SIMATIC PCS 7 Software Media Package	
• Physical delivery License key on USB flash drive, certificate of license	
- 100 POs	**6ES7653-2BA00-0XB5**
- 1 000 POs	**6ES7653-2BB00-0XB5**
• Online delivery License key download, online certificate of license Note: E-mail address required!	
- 100 POs	**6ES7653-2BA00-0XH5**
- 1 000 POs	**6ES7653-2BB00-0XH5**
Further SIMATIC PCS 7 system software SIMATIC PDM and SIMATIC PCS 7 Maintenance Station see chapter 7 "Plant Device Management"	
Keyboard/mouse	
SIMATIC PC keyboard German/international with USB connection	**6ES7648-0CB00-0YA0**
SIMATIC HMI USB mouse Optical mouse with scroll wheel and USB connection, color anthracite	**6AV2181-8AT00-0AX0**
Fieldbus connection	
PROFIBUS FastConnect bus connector RS 485 Plug 180 With 180° cable outlet, insulation displacement	**6GK1500-0FC10**

Accessories

Portrait mounting kit	
• Kit 1: Interfaces to the front	**6ES7648-1AA10-1YB0**
• Kit 2: Interfaces point up/down	**6ES7648-1AA10-1YA0**

Accessories

Portrait assembly kit

As an alternative to installation with mounting brackets, the portrait mounting kit allows for space-saving installation of the SIMATIC PCS 7 BOX (standard design without Panel Front). It is available in two models:

- Kit 1: Portrait assembly with interfaces to the front
- Kit 2: Portrait assembly with interfaces on top or bottom

Together with the kit, the SIMATIC PCS 7 BOX occupies a mounting depth of 365 mm (Kit 1) or 279 mm (Kit 2) in the control cabinet. The limitations associated with portrait assembly regarding vibration and shock resistance are relatively small (see technical specifications).

Since all interfaces are accessible from the front when using Kit 1, this type of assembly is particularly suitable for commissioning and servicing.

Please observe the information on operation planning and device installation in the manual of the SIMATIC IPC627D in conjunction with the use of portrait mounting kits for SIMATIC PCS 7 BOX.

Uninterruptible DC power supply (DC UPS)

You can bypass power failures by using a SITOP DC UPS uninterruptible power supply. For information and suitable products see the chapter "Process I/O", section "Power supplies", from page 11/8, as well as catalog KT 10.1.

Notes

Communication

10

Overview

Through application of SIMATIC NET network components based on globally established standards, SIMATIC PCS 7 is provided with a powerful and rugged range of products for implementing integrated communications networks for reliable data exchange between all system components and levels of a plant.

The SIMATIC NET products specially developed for industrial applications provide optimum suitability for plants in all sectors. They are matched to one another, and satisfy maximum demands, especially in areas subject to extreme influences, such as:

- Electromagnetic interfering fields
- Corrosive liquids and atmospheres
- Danger of explosion
- High mechanical stress

The SIMATIC NET products guarantee expandability and the protection of investments as a result of compatible further developments, as well as uniformity from inbound logistics to outbound logistics and from field devices up to the management information system.

Design

Incorporated in Totally Integrated Automation, the unique basis offered by Siemens for uniform automation of all sectors in the production, process or hybrid industries, the SIMATIC NET busses promote fast and reliable communication between the individual systems/applications of the SIMATIC PCS 7 process control systems such as:

- Automation systems, distributed I/Os and field components
- Engineering system, operator system and Maintenance Station
- SIMATIC BATCH and SIMATIC Route Control
- Web clients and Web servers for operator control and monitoring via Internet/Intranet as well as IT applications

Industrial Ethernet plant bus

Industrial Ethernet is used as the plant bus as well as terminal bus for multi-user systems with client/server architecture. For small systems, the "Basic Communication Ethernet" (BCE) integrated in the SIMATIC PCS 7 Industrial Workstations permits operation of single stations and servers on the plant bus even without a CP 1613/CP 1623/CP 1628 communications processor.

In medium and large plants characterized by high requirements, SIMATIC PCS 7 applies modern Gigabit and FastEthernet technology which combines the high security provided by redundant optical rings with the scalable performance provided by switching technology and high transmission rates up to 1 Gbit/s.

PROFINET

PROFINET is based on the international standards IEC 61158 and IEC 61784 and combines the advantages of the open network standard, Ethernet, and the PROFIBUS fieldbus system. It stands for maximum transparency, open IT communication, network security and real-time communication down to the field level. This makes PROFINET the basis for uniform automation network in the plant, into which existing fieldbuses implemented with PROFIBUS can be easily integrated.

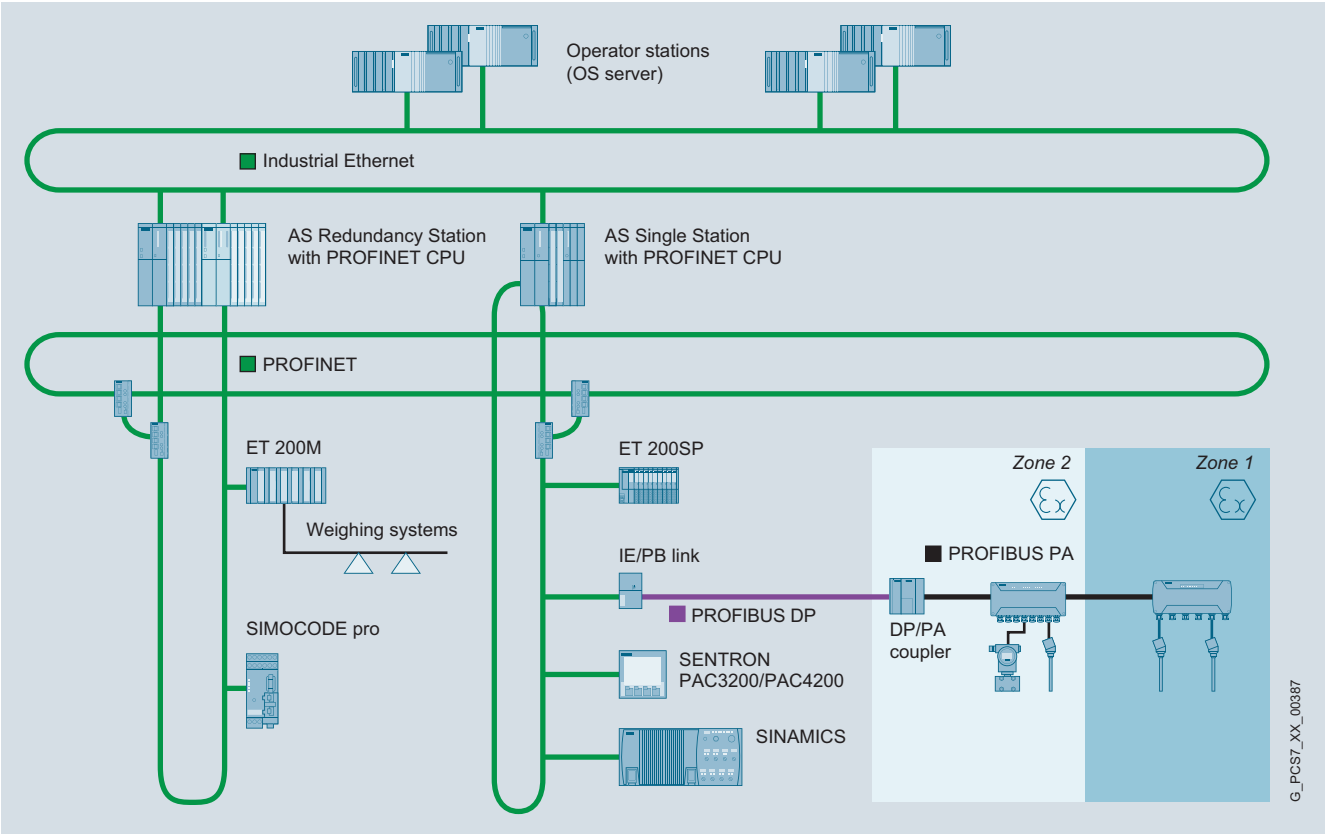

Example of PROFINET communication in the SIMATIC PCS 7 process control system

In the context of the SIMATIC PCS 7 process control system, PROFINET mainly focuses on communication between the automation systems (controllers) and the process I/O.

Design (continued)

Fieldbus systems

PROFIBUS has become established as sturdy and reliable communications medium for connecting intelligent distributed I/O devices, transmitters and actuators to the controller level of the SIMATIC PCS 7 process control system. The universal, open fieldbus corresponds to the international standards IEC 61158 and IEC 61784.

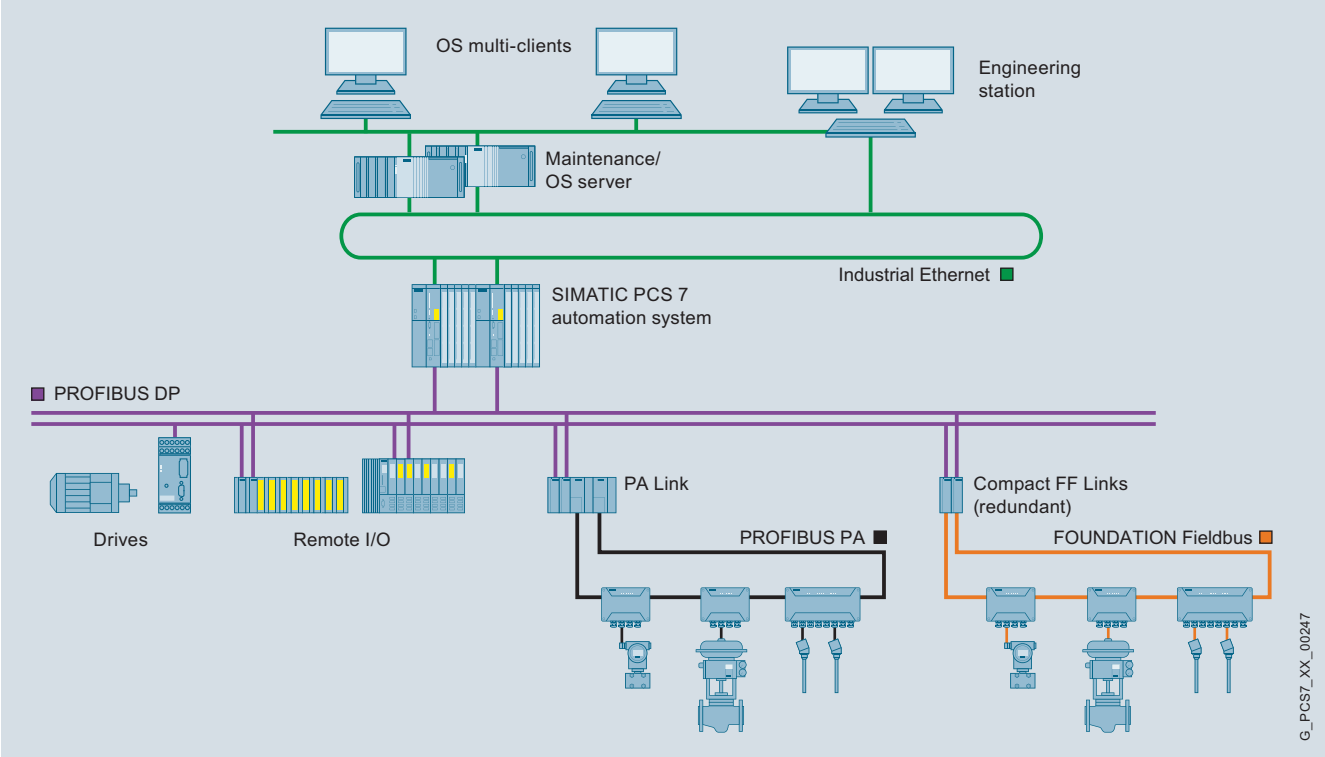

Integration of PROFIBUS PA and FOUNDATION Fieldbus H1

PROFIBUS DP

PROFIBUS DP is a system bus and simultaneously an open communications system, and it is designed for high data transmission rates and short response times. It is therefore optimally suitable for the control of the following devices:

- Directly connected field devices, e.g. drives, motor starters, analyzers, process controllers, or panels
- Distributed I/O devices such as the ET 200M, ET 200iSP, ET 200S or ET 200pro remote I/O stations
- Transmitters and actuators on a seamlessly integrated PROFIBUS PA fieldbus or FOUNDATION Fieldbus H1

Since it also supports the transmission of the HART protocol, HART field devices can also be integrated in a PROFIBUS DP communication network.

PROFIBUS PA and FOUNDATION Fieldbus H1

In addition to the direct connection of transmitters and actuators including power supply via the communication medium, the high information content of the communication as well as the diagnostics facilities are also of importance for the automation of industrial processes that frequently take place in corrosive, harmful, and hazardous environments.

Both the PROFIBUS PA fieldbus and the FOUNDATION Fieldbus H1 meet these requirements. Both are optimally suitable for directly integrating actuators and sensors in operating environments up to Ex zone 1/21 or 0/20 into the process system.

Their physical bus characteristics are based on the MBP transmission technology (Manchester Coded; Bus Powered) and are largely identical according to IEC 61158. Both fieldbuses can be integrated seamlessly in the SIMATIC PCS 7 process control system using PROFIBUS DP as link.

PROFIBUS PA and FOUNDATION Fieldbus H1 thus profit equally from the higher-level PROFIBUS architecture.

Overview

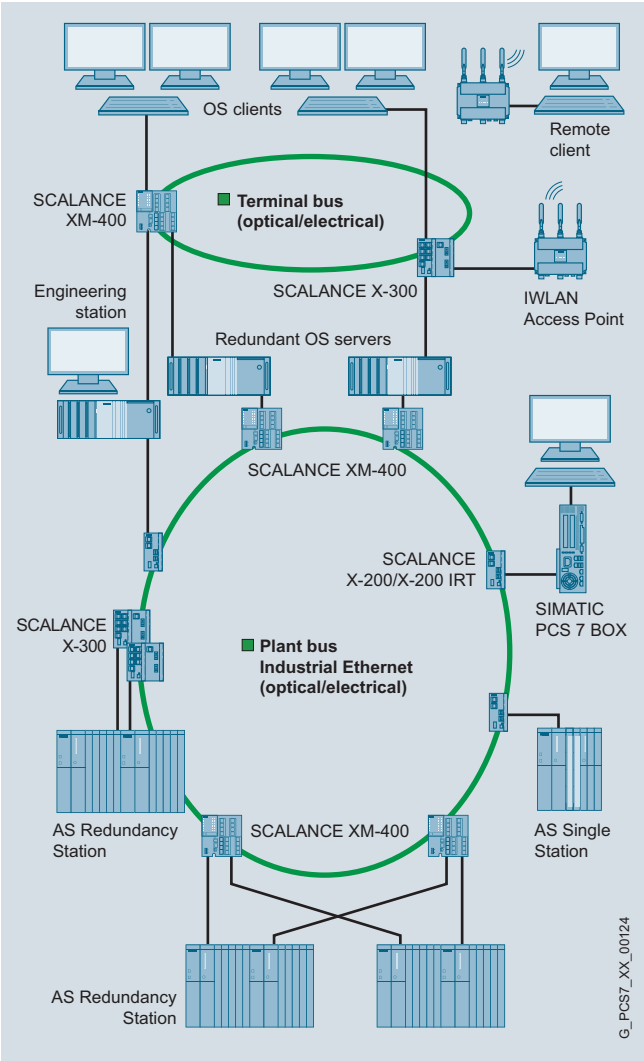

Industrial Ethernet, connection examples

The plant bus and the terminal bus for multi-user systems with client/server architecture are implemented with Industrial Ethernet, a powerful area and cell network for industrial applications in line with the international IEEE 802.3 standard (Ethernet). Bus structures with optical rings are particularly suitable for this because of their high noise immunity and high availability.

In medium-sized and large plants characterized by high requirements, SIMATIC PCS 7 applies modern Gigabit and FastEthernet technology. This combines the high reliability of optical rings with the scalable performance of switching technology and high transmission rates up to 1 Gbps.

Benefits

Ethernet presently has a market share of over 80 % with a tendency to rise further, thus placing it in pole position in the global LAN landscape. Ethernet offers important characteristics that can give you significant advantages for your application:

- Fast commissioning through simple connections
- High flexibility since existing networks can be extended without any adverse effects
- High availability thanks to redundant network topologies
- Almost unlimited communications performance because scalable performance is available through switching technology if required
- Networking of different application areas such the office and production areas
- Investment security through continuous compatible further development
- Plant-wide clock system permits exact assignment of events within the complete plant

Ethernet technology for industrial environment

With Industrial Ethernet, SIMATIC NET expands the Ethernet technology by future-oriented network components with special properties and capabilities for use in industrial environments, e.g.:

- Rugged design, suitable for harsh industrial environments
- Fast local assembly using the FastConnect cabling system with RJ45 technology
- High fault tolerance through redundancy and fast switchover to redundant system (max. 300 ms)
- Continuous monitoring of network components through a simple yet effective signaling concept

Design

The following Ethernet communications interfaces are used in the various SIMATIC PCS 7 subsystems (ES, OS, AS etc.):

- Interfaces integrated onboard
- Simple network cards
- Special communication modules, e.g. CP 1613 A2, CP 1623, CP 1628

These are defined when selecting the respective system components depending on the requirements. For further information, see Section "System connection of PCS 7 systems".

The communication stations can be integrated in the terminal bus and the plant bus using Industrial Ethernet Switches of the SCALANCE X product family. These switches offer scalable performance at an attractive price and support a wide variety of configuration options.

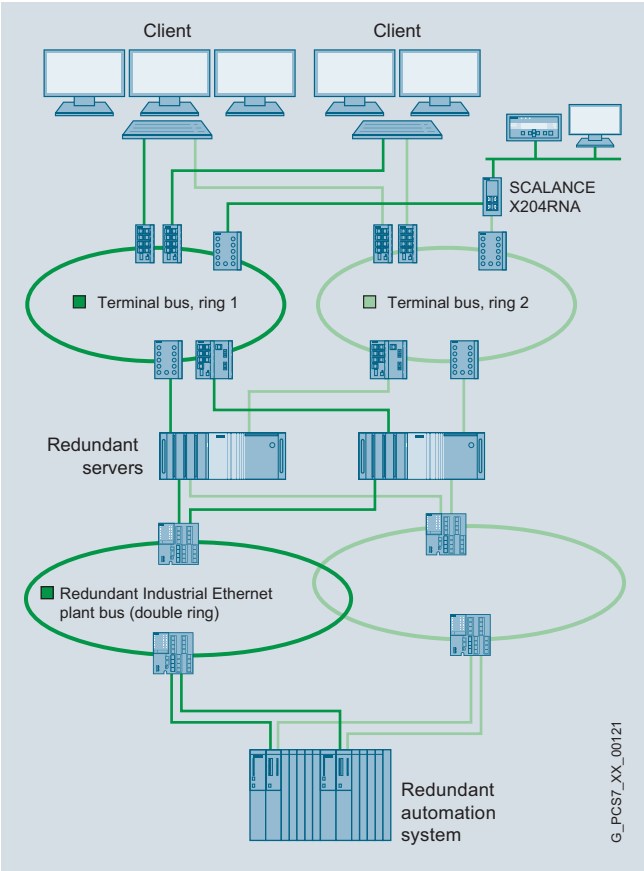

Plant and terminal buses: Example configuration with two redundant rings

Terminal bus

Client-server and server-server communication is carried out on a dedicated Ethernet LAN. The communication network identified as terminal bus can be implemented with standard SIMATIC NET components such as switches, onboard interfaces, network cards, communications processors (CP), cables etc.

A ring design avoids communication failures if e.g. the line is damaged or opened at a particular point. To further increase the availability, it is also possible to distribute the communication over two redundant rings. Each PCS 7 station is connected to one of two Industrial Ethernet interfaces on both of the two separate rings. The SIMATIC NET SOFTNET-IE RNA communication software on the PCS 7 stations organizes communication processes based on the PRP. Non PRP-enabled devices that have only one Industrial Ethernet port, such as SICLOCK TC 400, can be integrated in the redundant terminal bus via SCALANCE X204RNA.

The **Parallel Redundancy Protocol (PRP)** according to IEC 62439-3 is based on double transmission of message frames over two separate networks (Ring 1, Ring 2). At the sender, the SOFTNET-IE RNA software or the SCALANCE X-200RNA network access point duplicates the message frame arriving from the sender and feeds one message frame to Ring 1 and the other to Ring 2. At the receiver, the software or the network access point forwards the first incoming message frame to the recipient. The second message frame from the second LAN is discarded. Transmission of the message frame is thus always ensured without delay if an error occurs.

Industrial Ethernet plant bus

The automation systems (AS) communicate with one another and with the engineering system and operator systems (servers/single stations) over the Industrial Ethernet plant bus. This can be configured in a similar way to the terminal bus, using SIMATIC NET standard components such as switches, network adapters, communication modules (CP), cables, etc. For small plants with up to 8 standard automation systems per operator system, single stations and servers can be efficiently operated on the plant bus using "Basic Communication Ethernet" (BCE) and a FastEthernet network adapter. The CP 1613 A2/CP 1623/CP 1628 communication module is always required if more than 8 automation systems or redundant automation systems are used.

As far as availability is concerned, ring topologies are always the first choice for the plant bus. With particularly high availability requirements, the plant bus can also be configured as a redundant double ring (two CPs per AS CPU and OS server). Double faults such as a switch failure on ring 1 with a simultaneous interruption in the bus cable on ring 2 can then be tolerated. The two rings in such a configuration are physically separated. The coupling partners are linked together logically when configuring with NetPro over a high availability S7 connection (4-way redundancy). One switch each takes over the function of the redundancy manager for each ring. The current switches of the SCALANCE X-500, XM-400, X-300, X-200 IRT, XB-200 and X-200 product lines can act as redundancy manager.

Note:

Detailed information on Industrial Ethernet and on the network components can be found in Catalog IK PI, in the Industry Mall, or in Catalog CA 01 under "Industrial Communication".

Technical specifications

Plant bus / terminal bus	**Industrial Ethernet**
Number of stations	1 023 per network segment (IEEE 802.3 standard)
Number of switches	Up to 50
Length of the network	
Local network	Electrical up to approx. 5 km Optical up to approx. 150 km
WAN	Worldwide with TCP/IP
Topology	Line, tree, ring, star

Overview

Switches are active network components that specifically distribute data to the relevant addressees. SCALANCE X is the modern range of Industrial Ethernet switches from SIMATIC NET. The SCALANCE X family comprises product lines that complement each other and are carefully tuned to the specific automation task.

Design

In the context of SIMATIC PCS 7, switches from the following SCALANCE X product lines can be used:

- SCALANCE X-000
- SCALANCE X-100
- SCALANCE X-200
- SCALANCE XB-200
- SCALANCE X-200 IRT
- SCALANCE X-300
- SCALANCE XM-400
- SCALANCE X-500

These product lines are specifically suited for electrical and/or optical networks based on linear, star and ring topologies.

They are characterized by the fact that the number of ports, modularity, flexibility and functionality increase with increasing numbers.

The designs of the switches differ not only among individual product lines, but also within a product line, for example:

- Compact design or flat design in the ET 200S format for X-200 and X-200 IRT
- Compact design or rack design for X-300

		Application areas / type of network / requirements	Office incorporation	Plant networking	Industry-related applications	Energy generation and distribution	Wind energy plants	Machine building and plant engineering	Plant subnetworking	High-volume machine building	Internal machine networking
X-500		High-performance backbone networks with very high emphasis on functionality/ port density/availability and interface to IT network	•	•	•						
XM-400		High-performance plant network with high emphasis on functionality and availability	•	•	•						
X-300		Large networks with high emphasis on functionality and availability		•							
	X-300EEC/ XR-300EEC					•	•				
X-200		Networks with higher emphasis on functionality and availability						•	•		
	X204RNA			•					•		
	X204RNA EEC			•		•	•				
X-100		Networks with low emphasis on functionality						•		•	
X-000		Networks with low emphasis on functionality and robustness								•	•

• applies

G_PCS7_XX_00347

Industrial Ethernet Switches SCALANCE X: Areas of application

Design (continued)

	Features	Modular through media modules	19" design	Support of Gigabit Ethernet	Power-over-Ethernet	Can be used under Enhanced Environmental Conditions (EEC)	Isochronous Real-Time (IRT)	Layer 3	Office features (VLAN)	Diagnosis	PROFINET IO Device	Time synchronization according to IEEE 1588
X-500		•	•	•	•			•	•	•	•	
XM-400		•		•				•	•	•	•	
X-300		•	•	•	•				•	•	•	
	X-300EEC/ XR-300EEC	•	•	•		•				•	•	•
X-200							•[2]			•	•	
	X204RNA									•		
	X204RNA EEC					•				•		
X-100					•							
X-000				•[1]								

G_PCS7_XX_00348

• applies [1] with Gigabit version [2] with IRT version

Industrial Ethernet Switches SCALANCE X: Function overview

More information

The following catalog sections provide you with information and Ordering data for the individual SCALANCE X product lines.

For detailed information and technical specifications of the SCALANCE X Industrial Ethernet switches, see Catalog IK PI, section "PROFINET/Industrial Ethernet", subsection "Industrial Ethernet switches/Media converters".

The SIMATIC NET Selection Tool provides you with support for selecting the right Industrial Ethernet switches as well as during configuration of the modular versions:

Online version:
www.siemens.com/snst

Offline version:
www.siemens.com/snst-download

Overview

SCALANCE XB004-1

The Industrial Ethernet SCALANCE X-000 switches that can be used in small SIMATIC PCS 7 plants are suitable for setting up low-cost line or star topologies with switching functionality.

Special features

- Box design
- LED diagnostics (power, port status, data traffic)
- Electrical ports with auto-crossover function

Product range for SIMATIC PCS 7

SCALANCE XB004-1

- 4 x 10/100 Mbps RJ45 ports, electrical
- 1 x 100 Mbps SC port, optical (multi-mode, glass), up to 5 km

Design

The box enclosure type is designed for space-saving installation on a standard DIN rail in the control cabinet. Wall mounting is possible.

Boundary conditions for network configuration

- Length of the TP cable between two switches
  - max. 10 m via patch cables with TP Cord
  - Max. 100 m with Industrial Ethernet FastConnect products
- Length of the optical cables max. 5 km with Industrial Ethernet multi-mode FO cables

Ordering data

	Article No.
Industrial Ethernet Switches SCALANCE X-000 for 10/100 Mbps, including operating instructions and Industrial Ethernet network manual on CD-ROM	
• **SCALANCE XB004-1** 4 x 10/100 Mbps RJ45 ports electrical 1x 100 Mbps SC port optical (multi-mode, glass), up to 5 km	**6GK5004-1BD00-1AB2**
Accessories	
IE TP Cord RJ45/RJ45 TP cable 4 x 2 with 2 RJ45 connectors	
• 0.5 m	**6XV1870-3QE50**
• 1 m	**6XV1870-3QH10**
• 2 m	**6XV1870-3QH20**
• 6 m	**6XV1870-3QH60**
• 10 m	**6XV1870-3QN10**
FO Standard Cable GP 50/125/1400[1)2)] Multi-mode cable, sold by the meter max. length 1 000 m; minimum order 20 m	**6XV1873-2A**
SITOP compact 24 V/0.6 A 1-phase power supply with wide-range input 85 ... 264 V AC/ 110 ... 300 V DC, stabilized output voltage 24 V, rated output current value 0.6 A, slim design	**6EP1331-5BA00**

1) Special fiber-optic cables, lengths and accessories available on request

2) Special tools and specially trained personnel are required for pre-assembling glass fiber-optic cables

Overview

SCALANCE X104-2

The SCALANCE X-100 Industrial Ethernet switches can be used to set up low-cost line or star topologies with switching functionality.

Special features

- Rugged compact enclosure (S7-300 format)
- LED diagnostics (power, port status, data traffic)
- Signaling contact can be configured locally using SET button
- Local display (SET button)
- Redundant power supply (2 x 24 V DC)
- Electrical ports with auto-crossover function

Product range for SIMATIC PCS 7

SCALANCE X104-2

- 4 x 10/100 Mbps RJ45 ports, electrical
- 2 x 100 Mbps BFOC ports, optical (multi-mode, glass), up to 5 km

Design

The rugged metal housing is designed for space-saving installation on a standard DIN rail or an S7-300 mounting rail in control cabinets. Direct wall mounting in various positions is also possible.

Boundary conditions for network configuration

- Length of the TP cable between two switches
  - Max. 100 m with Industrial Ethernet FastConnect products
- Length of the optical cables max. 5 km with Industrial Ethernet multi-mode FO cables

Ordering data

	Article No.
Industrial Ethernet Switches SCALANCE X-100 for 10/100 Mbps, including operating instructions, Industrial Ethernet network manual and configuration software on CD-ROM	
• **SCALANCE X104-2** 4 x 10/100 Mbps RJ45 ports, electrical 2 x BFOC ports, optical (multi-mode, glass) up to 5 km	**6GK5104-2BB00-2AA3**
Accessories	
IE FC TP Standard Cable GP 2 x 2 (Type A) 4-wire, shielded TP installation cable for connecting to IE FC RJ45 outlet/IE FC RJ45 plug; PROFINET-compliant; with UL approval; sold by the meter; max. quantity 1 000 m, minimum order 20 m	**6XV1840-2AH10**
FO Standard Cable GP 50/125/1400[1)2)] Multi-mode cable, sold by the meter; max. length 1 000 m; minimum order 20 m	**6XV1873-2A**
FC FO Standard Cable GP 62.5/200/230 FC FO standard cable for fixed routing indoors with PVC sheath; sold by the meter, max. length 1 000 m, minimum order 20 m	**6XV1847-2A**
IE FC RJ45 plug 180 2 x 2 RJ45 plug connector for Industrial Ethernet with a rugged metal enclosure and integrated insulation displacement contacts for connecting Industrial Ethernet FC installation cables; with 180° cable outlet; for network components and CPs/CPUs with Industrial Ethernet interface	
• 1 pack = 1 unit	**6GK1901-1BB10-2AA0**
• 1 pack = 10 units	**6GK1901-1BB10-2AB0**
• 1 pack = 50 units	**6GK1901-1BB10-2AE0**
FC BFOC Plug Screw connector for on-site assembly on FC fiber-optic cable; (1 pack = 20 units + cleaning cloths)	**6GK1900-1GB00-0AC0**
IE FC Stripping Tool Pre-adjusted stripping tool for fast stripping of the Industrial Ethernet FC cables	**6GK1901-1GA00**
FC FO termination kit Assembly case for on-site assembly of FC SC and FC BFOC connectors to FC FO standard cable, comprising a stripping tool, Kevlar cutters, fiber breaking tool and microscope	**6GK1900-1GL00-0AA0**
SITOP compact 24 V/0.6 A 1-phase power supply with wide-range input 85 ... 264 V AC/ 110 ... 300 V DC, stabilized output voltage 24 V, rated output current value 0.6 A, slim design	**6EP1331-5BA00**

1) Special fiber-optic cables, lengths and accessories available on request

2) Special tools and specially trained personnel are required for pre-assembling glass fiber-optic cables

Overview

SCALANCE X-200 switches in compact design

You can implement line and star topologies with the switches of the SCALANCE X-200 product line; it is also possible to implement low-cost electrical or optical ring topologies with transmission rates up to 100 Mbps.

The switches are available in two designs:

- Compact design X-200
  Rugged compact enclosure with
  - IP30 degree of protection, for installation in control cabinets
  - IP65 degree of protection, for installation outside control cabinets (X208PRO)
- Flat design XF200
  Flat enclosure in ET 200S format, IP20 degree of protection, for installation in control cabinets or small control boxes

Product range for SIMATIC PCS 7

Compact design

Switches with electrical ports for TP cables up to 100 M max. for line, star or ring topologies:

- SCALANCE X208
  - 8 electrical RJ45 ports (10/100BaseTX)
- SCALANCE X208PRO (for use outside the control cabinet)
  - 8 electrical M12 ports (10/100BaseTX)
- SCALANCE X216
  - 16 electrical RJ45 ports (10/100BaseTX)
- SCALANCE X224
  - 24 electrical RJ45 ports (10/100BaseTX)

Switches with electrical ports for TP cables up to 100 m max. and optical ports for glass multi-mode FOC up to 5 km:

- SCALANCE X204-2 for optical line or ring topologies
  - 4 electrical RJ45 ports (10/100BaseTX)
  - 2 optical BFOC ports (100BaseFX) for glass multi-mode FOC
- SCALANCE X206-1 for star topologies as well as for line or ring topologies with electrical and optical transmission paths
  - 6 electrical RJ45 ports (10/100BaseTX)
  - 1 optical BFOC port (100BaseFX) for glass multi-mode FOC
- SCALANCE X212-2 for optical line or ring topologies
  - 12 electrical RJ45 ports (10/100BaseTX)
  - 2 optical BFOC ports (100BaseFX) for glass multi-mode FOC

Switches with electrical ports for TP cables up to 100 m max. and optical ports for glass single-mode FOC up to 26 km:

- SCALANCE X204-2LD for optical line or ring topologies
  - 4 electrical RJ45 ports (10/100BaseTX)
  - 2 optical BFOC ports (100BaseFX) for glass single-mode FOC
- SCALANCE X206-1LD for star topologies as well as for line or ring topologies with electrical and optical transmission paths
  - 6 electrical RJ45 ports (10/100BaseTX)
  - 1 optical BFOC port (100BaseFX) for glass single-mode FOC
- SCALANCE X212-2LD for optical line or ring topologies
  - 12 electrical RJ45 ports (10/100BaseTX)
  - 2 optical BFOC ports (100BaseFX) for glass single-mode FOC

Flat design

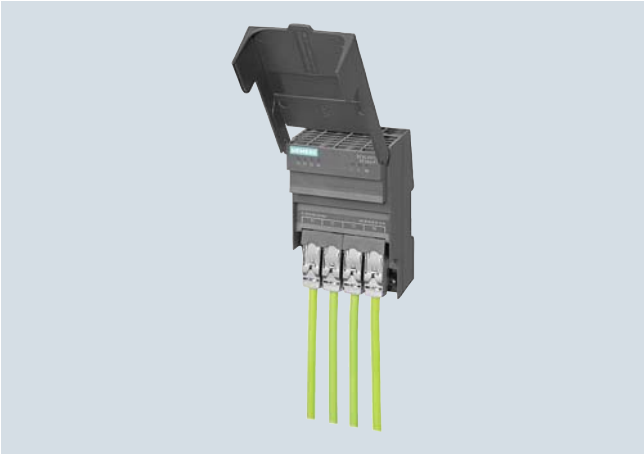

Switches with electrical ports for TP cables up to 100 M max. for line, star or ring topologies

- SCALANCE XF204
  - 4 electrical RJ45 ports (10/100BaseTX)
- SCALANCE XF208
  - 8 electrical RJ45 ports (10/100BaseTX)

Switches with electrical ports for TP cables up to 100 m max. and optical ports for glass multi-mode FOC up to 5 km

- SCALANCE XF204-2 for optical line or ring topologies
  - 4 electrical RJ45 ports (10/100BaseTX)
  - 2 optical BFOC ports (100BaseFX) for glass multi-mode FOC
- SCALANCE XF206-1 for star topologies as well as for line or ring topologies with electrical and optical transmission paths
  - 6 electrical RJ45 ports (10/100BaseTX)
  - 1 optical BFOC port (100BaseFX) for glass multi-mode FOC

Note:

Ordering data and information about the product versions SCALANCE X204RNA and SCALANCE X204RNA EEC for integration of non-PRP-enabled devices on a redundant terminal bus is available in the catalog section "System Connection of PCS 7 Systems", page 10/47.

Overview (continued)

Special features

		Hardware																	
	Type of device	Connection to S7 backplane bus	Format module S7	PC module	Flat type of construction	Box type of construction	19" type of construction	Rugged, compact housing	Modular design	10 Gigabit Ethernet	Gigabit Ethernet	PoE (Power over Ethernet)	LED diagnosis	SIMATIC environment	Redundant power supply (2 × 24 V DC)	External supply for integrated switch	Signal contact	Local display (SET pushbutton)	C-PLUG slot
SCALANCE X-200	X204-2							•					•	•	•		•	•	•
	X204-2LD							•					•	•	•		•	•	•
	X206-1							•					•	•	•		•	•	•
	X206-1LD							•					•	•	•		•	•	•
	X208							•					•	•	•		•	•	•
	X208PRO							•					•	•	•		•	•	•
	X212-2							•					•	•	•		•	•	•
	X212-2LD							•					•	•	•		•	•	•
	X216							•					•	•	•		•	•	•
	X224							•					•	•	•		•	•	•
	XF204				•								•	•	•		•	•	•
	XF204-2				•								•	•	•		•	•	•
	XF206-1				•								•	•	•		•	•	•
	XF208				•								•	•	•		•	•	•

• applies

G_PCS7_XX_00310

SCALANCE X-200 features, hardware

Overview (continued)

SCALANCE X-200	Type of device	Software																											
		Security Integrated (Firewall/VPN)	PROFINET diagnosis	Topology support (LLDP)	Command Line Interface/Telnet	Web based Management	Configuration with STEP 7	SNMP	Ring redundancy incl. RM-functionality	Standby redundancy	IRT capability	VLAN (Virtual Local Area Network)	GVRP (Generic VLAN Registaration Protocol)	STP/RSTP (Spanning Tree Protocol/ Rapid Spanning Tree Protocol)	Passive Listening	IGMP Snooping/Querier (Internet Group Management Protocol)	GMRP (Generic Multicast Protocol)	Broadcast/Multicast/Unicast Limiter	Broadcast blocking	DHCP Option 82 (Dynamic Host Configuration Protocol)	IP Access List	Access Control List (MAC)	IEEE 802.1x (Radius)	Link Aggregation	Static Routing	RIPv2 (Dynamic Routing)	OSPFv2 (Dynamic Routing)	VRRP, Router Redundancy (Virtual Router Redundancy Protocol)	
	X204-2		•	•	•	•	•	•	•						•														
	X204-2LD		•	•	•	•	•	•	•						•														
	X206-1		•	•	•	•	•	•	•						•														
	X206-1LD		•	•	•	•	•	•	•						•														
	X208		•	•	•	•	•	•	•						•														
	X208PRO					•	•	•																					
	X212-2		•	•	•	•	•	•	•						•														
	X212-2LD		•	•	•	•	•	•	•						•														
	X216		•	•	•	•	•	•	•						•														
	X224		•	•	•	•	•	•	•						•														
	XF204		•	•	•	•	•	•	•						•														
	XF204-2		•	•	•	•	•	•	•						•														
	XF206-1		•	•	•	•	•	•	•						•														
	XF208		•	•	•	•	•	•	•						•														

• applies

G_PCS7_XX_00311

SCALANCE X-200 features, software

Design

Installation can performed on a standard DIN rail, on an S7-300 mounting rail or directly on the wall. The electrical ports support auto-crossover.

Boundary conditions for network configuration

- Length of the TP cable between two SCALANCE X switches:
  - Max. 100 m with Industrial Ethernet FastConnect products (IE FC cable and IE FC RJ45 plug 180/IE FC M12 plug PRO)
  - Max. 10 m using patches with TP cord
- Length of the optical cables
  - Max. 5 km with Industrial Ethernet glass fiber-optic cables (multi-mode)
  - Max. 26 km with Industrial Ethernet glass fiber-optic cables (single-mode)

Summary of interfaces

Module type	Type and number of ports		
	Fast Ethernet 100 Mbps		
	Electrical (TP)		Optical (glass FOC)
	RJ45	M12	BFOC (ST socket)
Compact design			
X204-2	4	–	2 (multimode)
X204-2LD	4	–	2 (single-mode)
X206-1	6	–	1 (multimode)
X206-1LD	6	–	1 (single-mode)
X208	8	–	–
X208PRO	–	8	–
X212-2	12	–	2 (multimode)
X212-2LD	12	–	2 (single-mode)
X216	16	–	–
X224	24	–	–
Flat design			
XF204	4	–	–
XF204-2	4	–	2 (multimode)
XF206-1	6	–	1 (multimode)
XF208	8	–	–

Ordering data

	Article No.
Industrial Ethernet Switches SCALANCE X-200 for 10/100 Mbps, including operating instructions, Industrial Ethernet network manual and configuration software on CD-ROM	
Compact design	
With electrical ports	
SCALANCE X208 8 x 10/100 Mbps RJ45 ports (10/100BaseTX)	**6GK5208-0BA10-2AA3**
SCALANCE X208PRO 8 x 10/100 Mbps M12 ports (10/100BaseTX), including 11 x M12 dust covers, IP65 degree of protection,	**6GK5208-0HA10-2AA6**
SCALANCE X216 16 x 10/100 Mbps RJ45 ports (10/100BaseTX)	**6GK5216-0BA00-2AA3**
SCALANCE X224 24 x 10/100 Mbps RJ45 ports (10/100BaseTX)	**6GK5224-0BA00-2AA3**
With electrical ports and optical ports for glass multi-mode FOC up to max. 5 km	
SCALANCE X204-2 4 x 10/100 Mbps RJ45 ports (10/100BaseTX) 2 x 100 Mbps multi-mode BFOC ports (100BaseFX)	**6GK5204-2BB10-2AA3**
SCALANCE X206-1 6 x 10/100 Mbps RJ45 ports (10/100BaseTX) 1 x 100 Mbps multi-mode BFOC ports (100BaseFX)	**6GK5206-1BB10-2AA3**
SCALANCE X212-2 12 x 10/100 Mbps RJ45 ports (10/100BaseTX) 2 x 100 Mbps multi-mode BFOC ports (100BaseFX)	**6GK5212-2BB00-2AA3**
With electrical ports and optical ports for glass single-mode FOC up to max. 26 km	
SCALANCE X204-2LD 4 x 10/100 Mbps RJ45 ports (10/100BaseTX) 2 x 100 Mbps single-mode BFOC ports (100BaseFX)	**6GK5204-2BC10-2AA3**
SCALANCE X206-1LD 6 x 10/100 Mbps RJ45 ports (10/100BaseTX) 1 x 100 Mbps single-mode BFOC ports (100BaseFX)	**6GK5206-1BC10-2AA3**
SCALANCE X212-2LD 12 x 10/100 Mbps RJ45 ports (10/100BaseTX) 2 x 100 Mbps single-mode BFOC ports (100BaseFX)	**6GK5212-2BC00-2AA3**

	Article No.
Flat design	
With electrical ports	
SCALANCE XF204 4 x 10/100 Mbps RJ45 ports (10/100BaseTX)	**6GK5204-0BA00-2AF2**
SCALANCE XF208 8 x 10/100 Mbps RJ45 ports (10/100BaseTX)	**6GK5208-0BA00-2AF2**
With electrical ports and optical ports for glass multi-mode FOC up to max. 5 km	
SCALANCE XF204-2 4 x 10/100 Mbps RJ45 ports (10/100BaseTX) 2 x 100 Mbps multi-mode BFOC ports (100BaseFX)	**6GK5204-2BC00-2AF2**
SCALANCE XF206-1 6 x 10/100 Mbps RJ45 ports (10/100BaseTX) 1 x 100 Mbps multi-mode BFOC ports (100BaseFX)	**6GK5206-1BC00-2AF2**
Accessories	
IE FC TP Standard Cable GP 2x2 (type A) 4-core, shielded TP installation cable for connection to IE FC Outlet RJ45/IE FC RJ45 plug; PROFINET-compliant; with UL approval; sold by the meter; max. length 1 000 m, minimum order 20 m	**6XV1840-2AH10**
FO Standard Cable GP 50/125/1400[1)2)] Multi-mode cable, sold by the meter, max. length 1 000 m; minimum order 20 m	**6XV1873-2A**
FO Robust Cable GP 4E9/125/90[1)2)] Single-mode cable, sold by the meter, max. length 1 000 m; minimum order 20 m	**6XV1843-2R**
FC FO Standard Cable GP 62.5/200/230[1)2)] FC FO standard cable for fixed routing indoors with PVC sheath; sold by the meter, max. length 1 000 m; minimum order 20 m	**6XV1847-2A**
IE FC RJ45 Plug 180 2x2 RJ45 plug connector for Industrial Ethernet with a sturdy metal enclosure and integrated insulation displacement contacts for connecting Industrial Ethernet FC installation cables; with 180° cable outlet; for network components and CPs/CPUs with Industrial Ethernet interface	
• 1 pack = 1 unit	**6GK1901-1BB10-2AA0**
• 1 pack = 10 units	**6GK1901-1BB10-2AB0**
• 1 pack = 50 units	**6GK1901-1BB10-2AE0**

Ordering data

	Article No.
FC BFOC Plug Screw connector for on-site assembly on FC fiber-optic cable; (1 pack = 20 units + cleaning cloths)	**6GK1900-1GB00-0AC0**
IE FC Stripping Tool Pre-adjusted stripping tool for fast stripping of the Industrial Ethernet FC cables	**6GK1901-1GA00**
FC FO termination kit Assembly case for on-site assembly of FC SC and FC BFOC connectors to FC FO standard cable; comprising a stripping tool, Kevlar cutters, fiber breaking tool and microscope	**6GK1900-1GL00-0AA0**
IE FC M12 Plug PRO M12 plug connector for connection of Industrial Ethernet FC installation cables; 4-pin, D-coded, metal enclosure, IP65 degree of protection, pin insert; 180° cable outlet; for network components and Industrial Ethernet nodes with IP65/IP67 degree of protection	
• 1 pack = 1 unit	**6GK1901-0DB20-6AA0**
• 1 pack = 8 units	**6GK1901-0DB20-6AA8**
IE Connecting Cable M12-180/M12-180 Pre-assembled IE FC TP trailing cable GP 2 x 2 (PROFINET type C) with two 4-pin M12 plugs, 4-pin, D-coded, IP65/IP67 degree of protection; Length:	
• 0.3 m	**6XV1870-8AE30**
• 0.5 m	**6XV1870-8AE50**
• 1.0 m	**6XV1870-8AH10**
• 1.5 m	**6XV1870-8AH15**
• 2.0 m	**6XV1870-8AH20**
• 3.0 m	**6XV1870-8AH30**
• 5.0 m	**6XV1870-8AH50**
• 10 m	**6XV1870-8AN10**
• 15 m	**6XV1870-8AN15**
IE M12 Panel Feedthrough Control cabinet feedthrough for transition from 4-pin, D-coded M12 interface (IP65IP67) to RJ45 socket (IP20)	
• 1 pack = 5 units	**6GK1901-0DM20-2AA5**

	Article No.
IE Power M12 Cable Connector PRO Socket for connecting SCALANCE W-700/SCALANCE X208PRO for 24 V DC supply voltage; 4-pin, A-coded, with installation instructions	**6GK1907-0DC10-6AA3**
Signaling Contact M12 Cable Connector PRO Socket for connecting SCALANCE X208PRO for signaling contact; 5-pin, B-coded, with installation instructions	**6GK1908-0DC10-6AA3**
SITOP compact 24 V/0.6 A 1-phase power supply with wide-range input 85 – 264V AC/ 110 – 300 V DC, stabilized output voltage 24 V, rated output current value 0.6 A, slim design	**6EP1331-5BA00**
PS791-1PRO power supply AC/DC power supply, 10 W, IP65 (-20 to +60 °C) for SCALANCE X208PRO, input: 85 to 265 V AC, output: 24 V DC, metal housing, product package: AC power 3+PE cable connector, DC power cord M12, installation materials, manuals German/English	**6GK5791-1PS00-0AA6**
C-PLUG Removable medium for simple replacement of devices in event of fault; for saving of configuration and application data, can be used in SIMATIC NET products with C-PLUG slot	**6GK1900-0AB00**

1) Special fiber-optic cables, lengths and accessories available on request

2) Special tools and specially trained personnel are required for pre-assembling glass fiber-optic cables

Note:

For further components and accessories, especially cable material and connectors as well as tools and supplementary material for assembly, refer to the sections "FastConnect" (page 10/41), "ITP cables and connectors" (page 10/45) and "Fiber-optic cables" (page 10/46) as well as to Catalog IK PI.

Overview

SCALANCE XB205-3LD

The simple, economical SCALANCE XB-200 managed switches are optimized for setting up 10/100 Mbit/s Industrial Ethernets in a line, star or ring topology (Redundancy Manager built-in)

Special features

- Rugged plastic enclosure
- Low-maintenance operation due to fanless construction
- LED diagnostics (power, port status, data traffic)
- SNMP access, integrated Web server, remote diagnostics and signaling via network
- Diagnostics and configuration via website or console port
- Integrated autocrossover function

Product range for SIMATIC PCS 7

Switches with electrical ports

- SCALANCE XB208
  8 × 10/100 Mbit/s RJ45 port, electric
- SCALANCE XB216
  16 × 10/100 Mbit/s RJ45 port, electric

Switches with electrical and optical ports

- SCALANCE XB205-3
  5 × 10/100 Mbit/s RJ45 port, electric
  3 × 100 Mbit/s BFOC port, optical
- SCALANCE XB205-3
  5 × 10/100 Mbit/s RJ45 port, electric
  3 × 100 Mbit/s SC port, optical
- SCALANCE XB205-3LD
  5 × 10/100 Mbit/s RJ45 port, electric
  3 × 100 Mbit/s SC port, optical
- SCALANCE XB213-3
  13 × 10/100 Mbit/s RJ45 port, electric
  3 × 100 Mbit/s BFOC port, optical
- SCALANCE XB213-3
  13 × 10/100 Mbit/s RJ45 port, electric
  3 × 100 Mbit/s SC port, optical
- SCALANCE XB213-3LD
  13 × 10/100 Mbit/s RJ45 port, electric
  3 × 100 Mbit/s SC port, optical

Design

Industrial Ethernet Switches SCALANCE XB-200 are designed with IP20 degree of protection. The rugged plastic enclosure is designed installation on a standard DIN rail or in control cabinets. A 6-pin terminal block is provided for the redundant 24 V DC supply and ground.

Boundary conditions for network configuration

- Length of the TP cable between two switches
  - Max. 100 m with Industrial Ethernet FastConnect products
  - Max. 10 m using patches with TP cord
- Length of the optical cables
  - Max. 5 km with Industrial Ethernet FO cables Multimode (100 Mbit/s)
  - Max. 26 km with Industrial Ethernet FO cables single-mode between the SC ports of two LD switches (100 Mbit/s)

Ordering data

	Article No.
Industrial Ethernet Switches SCALANCE XB-200 for 10/100 Mbit/s, including operating instructions on DVD	
SCALANCE XB208 8 × 10/100 Mbit/s RJ45 ports electrical	**6GK5208-0BA00-2AB2**
SCALANCE XB216 16 × 10/100 Mbit/s RJ45 ports electrical	**6GK5216-0BA00-2AB2**
SCALANCE XB205-3 5 × 10/100 Mbit/s RJ45 ports electrical, 3 × 100 Mbit/s BFOC port optical (multimode, glass), up to max. 5 km	**6GK5205-3BB00-2AB2**
SCALANCE XB205-3 5 × 10/100 Mbit/s RJ45 ports electrical, 3 × 100 Mbit/s SC port optical (multimode, glass), up to max. 5 km	**6GK5205-3BD00-2AB2**
SCALANCE XB205-3LD 5 × 10/100 Mbit/s RJ45 ports electrical, 3 × 100 Mbit/s BFOC port optical (single-mode, glass), up to max. 26 km	**6GK5205-3BF00-2AB2**
SCALANCE XB213-3 13 × 10/100 Mbit/s RJ45 ports electrical, 3 × 100 Mbit/s BFOC port optical (multimode, glass), up to max. 5 km	**6GK5213-3BB00-2AB2**
SCALANCE XB213-3 13 × 10/100 Mbit/s RJ45 ports electrical, 3 × 100 Mbit/s SC port optical (multimode, glass), up to max. 5 km	**6GK5213-3BD00-2AB2**
SCALANCE XB213-3LD 13 × 10/100 Mbit/s RJ45 ports electrical, 3 × 100 Mbit/s BFOC port optical (single-mode, glass), up to max. 26 km	**6GK5213-3BF00-2AB2**

	Article No.
Accessories	
IE FC TP Standard Cable GP 2×2 (type A) 4-core, shielded TP installation cable for connection to IE FC Outlet RJ45/IE FC RJ45 Plug; PROFINET-compliant; with UL approval; sold by the meter, max. length 1 000 m, minimum order 20 m	**6XV1840-2AH10**
FO Standard Cable GP 50/125/14001)[2] Multi-mode cable, sold by the meter, max. length 1 000 m; minimum order 20 m	**6XV1873-2A**
FC FO Standard Cable GP 62.5/200/230 FC FO standard cable for fixed routing indoors with PVC sheath; sold by the meter, max. length 1 000 m; minimum order 20 m	**6XV1847-2A**
IE FC RJ45 Plug 180 2×2 RJ45 plug connector for Industrial Ethernet with a rugged metal enclosure and integrated insulation displacement contacts for connecting Industrial Ethernet FC installation cables; with 180° cable outlet; for network components and CPs/CPUs with Industrial Ethernet interface	
• 1 pack = 1 unit	**6GK1901-1BB10-2AA0**
• 1 pack = 10 units	**6GK1901-1BB10-2AB0**
• 1 pack = 50 units	**6GK1901-1BB10-2AE0**
FC BFOC Plug Screw connector for on-site assembly on FC FO cable; (1 pack = 20 units + cleaning cloths)	**6GK1900-1GB00-0AC0**
IE FC Stripping Tool Pre-adjusted stripping tool for fast stripping of the Industrial Ethernet FC cables	**6GK1901-1GA00**
FC FO Termination Kit Assembly kit for on-site assembly of FC SC and FC BFOC connectors to FC FO standard cable, comprising a stripping tool, Kevlar cutters, fiber breaking tool and microscope	**6GK1900-1GL00-0AA0**
SITOP compact 24 V/0.6 A 1-phase power supply with wide-range input 85 to 264 V AC / 110 to 300 V DC. stabilized output voltage 24 V, rated output current value 0.6 A, slim design	**6EP1331-5BA00**

[1] Special fiber-optic cables, lengths and accessories available on request

[2] Special tools and specially trained personnel are required for fabricating glass fiber-optic cables

Overview

SCALANCE X-200 IRT switches in compact design

You can implement line and star topologies with the switches of the SCALANCE X-200 IRT product line; it is also possible to implement low-cost electrical or optical ring topologies with transmission rates up to 100 Mbps.

The switches are available in two designs:

- Compact design X-200 IRT
  Rugged compact enclosure with
  - IP30 degree of protection, for installation in control cabinets
  - IP65/67 degree of protection, for installation outside control cabinets (PRO version)
- Flat design XF-200 IRT
  Flat enclosure in ET 200S format, IP20 degree of protection, for installation in control cabinets or small control boxes

Product range for SIMATIC PCS 7

Compact design

- SCALANCE X204 IRT
  - 4 electrical RJ45 ports (10/100BaseTX) for TP cables up to 100 m max.
- SCALANCE X204 IRT PRO (for use outside the control cabinet)
  - 4 electrical push-pull RJ45 ports (10/100BaseTX) for TP cables up to 100 m max.
- SCALANCE X202-2 IRT
  - 2 electrical RJ45 ports (10/100BaseTX) for TP cables up to 100 m max.
  - 2 optical BFOC ports (100BaseFX) for the connection of glass multi-mode FOC (up to 5 km)
- SCALANCE X202-2P IRT
  - 2 electrical RJ45 ports (10/100BaseTX) for TP cables up to 100 m max.
  - 2 optical SC RJ ports (100BaseFX) for the connection of Ethernet POF FOC (up to 50 m) and PCF FOC (up to 100 m) using SC RJ plug connectors
- SCALANCE X202-2P IRT PRO
  - 2 electrical push-pull RJ45 ports (10/100BaseTX) for TP cables up to 100 m max
  - 2 optical push-pull SC RJ ports (100BaseFX) for the connection of Ethernet POF FOC (up to 50 m) and PCF FOC (up to 100 m) using SC RJ Plug PRO connectors
- SCALANCE X201-3P IRT
  - 1 electrical RJ45 port (10/100BaseTX) for TP cables up to 100 m max
  - 3 optical SC RJ ports (100BaseFX) for the connection of Ethernet POF FOC (up to 50 m) and PCF FOC (up to 100 m) using SC RJ plug connectors
- SCALANCE X200-4P IRT
  - 4 optical SC RJ ports (100BaseFX) for the connection of Ethernet POF FOC (up to 50 m) and PCF FOC (up to 100 m) using SC RJ plug connectors

Flat design

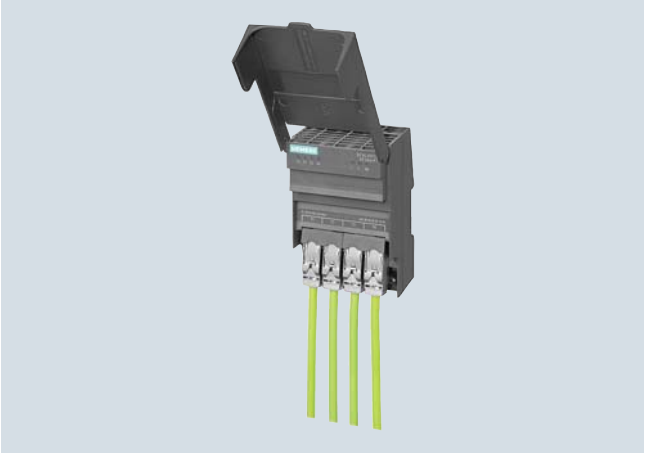

- SCALANCE XF204 IRT
  - 4 electrical RJ45 ports (10/100BaseTX) for TP cables up to 100 m max.

Overview (continued)

Special features

SCALANCE X-200IRT	Hardware																	
Type of device	Connection to S7 backplane bus	Format module S7	PC module	Flat type of construction	Box type of construction	19" type of construction	Rugged, compact housing	Modular design	10 Gigabit Ethernet	Gigabit Ethernet	PoE (Power over Ethernet)	LED diagnosis	SIMATIC environment	Redundant power supply (2 × 24 V DC)	External supply for integrated switch	Signal contact	Local display (SET pushbutton)	C-PLUG slot
X200-4P IRT							•					•	•	•		•	•	•
X201-3P IRT							•					•	•	•		•	•	•
X202-2IRT							•					•	•	•		•	•	•
X202-2P IRT							•					•	•	•		•	•	•
X202-2P IRT PRO							•					•	•	•		•	•	•
X204IRT							•					•	•	•		•	•	•
X204IRT PRO							•					•	•	•		•	•	•
XF204IRT				•								•	•	•		•	•	•

• applies

G_PCS7_XX_00308

SCALANCE X-200 IRT/XF-200 IRT features, hardware

SCALANCE X-200IRT	Software																											
Type of device	Security Integrated (Firewall/VPN)	PROFINET diagnosis	Topology support (LLDP)	Command Line Interface/Telnet	Web based Management	Configuration with STEP 7	SNMP	Ring redundancy incl. RM-functionality	Standby redundancy	IRT capability	VLAN (Virtual Local Area Network)	GVRP (Generic VLAN Registaration Protocol)	STP/RSTP (Spanning Tree Protocol/ Rapid Spanning Tree Protocol)	Passive Listening	IGMP Snooping/Querier (Internet Group Management Protocol)	GMRP (Generic Multicast Protocol)	Broadcast/Multicast/Unicast Limiter	Broadcast blocking	DHCP Option 82 (Dynamic Host Configuration Protocol)	IP Access List	Access Control List (MAC)	IEEE 802.1x (Radius)	Link Aggregation	Static Routing	RIPv2 (Dynamic Routing)	OSPFv2 (Dynamic Routing)	VRRP, Router Redundancy (Virtual Router Redundancy Protocol)
X200-4P IRT		•	•	•	•	•	•	•	•	•				•													
X201-3P IRT		•	•	•	•	•	•	•	•	•				•													
X202-2IRT		•	•	•	•	•	•	•	•	•				•													
X202-2P IRT		•	•	•	•	•	•	•	•	•				•													
X202-2P IRT PRO		•	•	•	•	•	•	•	•	•				•													
X204IRT		•	•	•	•	•	•	•	•	•				•													
X204IRT PRO		•	•	•	•	•	•	•	•	•				•													
XF204IRT		•	•	•	•	•	•	•	•	•				•													

• applies

G_PCS7_XX_00309

SCALANCE X-200 IRT/XF-200 IRT features, software

Design

Installation can performed on a standard DIN rail, on an S7-300 mounting rail or directly on the wall. The electrical ports support auto-crossover.

Boundary conditions for network configuration

- Length of the TP cable between two SCALANCE X switches:
  - Max. 100 m with Industrial Ethernet FastConnect products (IE FC cable and IE FC RJ45 plug 180/IE FC RJ45 plug PRO)
  - Max. 10 m using patches with TP cord
- Length of the optical cables
  - Max. 4 km with Industrial Ethernet glass FOC (62.5/125 µm)
  - Max. 5 km with Industrial Ethernet glass FOC (50/125 µm)
  - Max. 100 m with Industrial Ethernet PCF fiber-optic cables
  - Max. 50 m with Industrial Ethernet POF fiber-optic cables

Summary of interfaces

Module type	Type and number of ports				
	Fast Ethernet 100 Mbps				
	Electrical (TP)		Optical (FO)		
	RJ45	RJ45 push-pull	Plastic FO: (POF/PCF)		Glass fiber-optic cable
			SC RJ	SC RJ push-pull	BFOC (ST socket)
Compact design					
X200-4P IRT	–	–	4	–	–
X201-3P IRT	1	–	3	–	–
X202-2 IRT	2	–	–	–	2 (multimode)
X202-2P IRT	2	–	2	–	–
X202-2P IRT PRO	–	2	–	2	–
X204 IRT	4	–	–	–	–
X204 IRT PRO	–	4	–	–	–
Flat design					
XF204 IRT	4	–	–	–	–

Ordering data

	Article No.
Industrial Ethernet Switches SCALANCE X-200 IRT for 10/100 Mbps, including operating instructions, Industrial Ethernet network manual and configuration software on CD-ROM	
Compact design	
SCALANCE X204 IRT 4 x 10/100 Mbps RJ45 ports (10/100BaseTX)	**6GK5204-0BA00-2BA3**
SCALANCE X204 IRT PRO 4 x 10/100 Mbps RJ45 push-pull ports (10/100BaseTX)	**6GK5204-0JA00-2BA6**
SCALANCE X202-2 IRT 2 x 10/100 Mbps RJ45 ports (10/100BaseTX) 2 x 100 Mbps multi-mode BFOC ports (100BaseFX)	**6GK5202-2BB00-2BA3**
SCALANCE X202-2P IRT 2 x 10/100 Mbps RJ45 ports (10/100BaseTX) 2 x 100 Mbps POF/PCF SC RJ ports (100BaseFX)	**6GK5202-2BH00-2BA3**
SCALANCE X202-2P IRT PRO 2 x 10/100 Mbps RJ45 push-pull ports (10/100BaseTX) 2 x 100 Mbps POF/PCF SC RJ push-pull ports (100BaseFX)	**6GK5202-2JR00-2BA6**
SCALANCE X201-3P IRT 1 x 10/100 Mbps RJ45 port (10/100BaseTX) 3 x 100 Mbps POF/PCF SC RJ ports (100BaseFX)	**6GK5201-3BH00-2BA3**
SCALANCE X200-4P IRT 4 x 100 Mbps POF/PCF SC RJ ports (100BaseFX)	**6GK5200-4AH00-2BA3**
Flat design	
SCALANCE XF204 IRT 4 x 10/100 Mbps RJ45 ports (10/100BaseTX)	**6GK5204-0BA00-2BF2**

	Article No.
Accessories	
IE FC TP Standard Cable GP 2 x 2 (Type A) 4-core, shielded TP installation cable for connection to IE FC Outlet RJ45/IE FC RJ45 Plug; PROFINET-compliant; with UL approval; sold by the meter, max. length 1 000 m, minimum order 20 m	**6XV1840-2AH10**
FO Standard Cable GP 50/125/1400[1) 2)] Multi-mode cable, sold by the meter, max. length 1 000 m; minimum order 20 m	**6XV1873-2A**
POF Standard Cable GP 980/1000 POF standard cable for fixed routing indoors with PVC sheath; sold by the meter, max. length 1 000 m; minimum order 20 m	**6XV1874-2A**
PCF Standard Cable GP 200/230 Standard cable, may be split, sold by the meter, max. quantity 1 000 m; minimum order 20 m	**6XV1861-2A**
IE FC RJ45 Plug 180 2 x 2 RJ45 plug connector for Industrial Ethernet with a sturdy metal enclosure and integrated insulation displacement contacts for connecting Industrial Ethernet FC installation cables; with 180° cable outlet; for network components and CPs/CPUs with Industrial Ethernet interface	
• 1 pack = 1 unit	**6GK1901-1BB10-2AA0**
• 1 pack = 10 units	**6GK1901-1BB10-2AB0**
• 1 pack = 50 units	**6GK1901-1BB10-2AE0**

Ordering data

	Article No.
IE FC Stripping Tool Pre-adjusted stripping tool for fast stripping of the Industrial Ethernet FC cables	**6GK1901-1GA00**
IE FC RJ45 Plug PRO Field assembly FastConnect RJ45 plug connector; plastic housing, insulation/displacement technology, for SCALANCE X-200IRT PRO switches and SIMATIC ET 200pro; 1 connector (IP65/67) suitable for on-site assembly	**6GK1901-1BB20-6AA0**
SC RJ POF Plug 20 plugs for on-site assembly	**6GK1900-0MB00-0AC0**
SC RJ POF Plug PRO 1 plug (IP65/67) for on-site assembly	**6GK1900-0MB00-6AA0**
SC RJ PCF Plug 10 plugs for on-site assembly	**6GK1900-0NB00-0AC0**
SC RJ PCF Plug PRO 1 plug (IP65/67) for on-site assembly	**6GK1900-0NB00-6AA0**
FC FO termination kit Assembly case for on-site assembly of FC SC and FC BFOC connectors to FC FO standard cable; comprising a stripping tool, Kevlar cutters, fiber breaking tool and microscope	**6GK1900-1GL00-0AA0**
Termination Kit SC RJ POF Plug Assembly case for on-site assembly of SC RJ POF connectors; consisting of stripping tool, Kevlar cutters, SC RJ grinding plate, grinding paper, grinding base and microscope	**6GK1900-0ML00-0AA0**
Termination Kit SC RJ PCF Plug Assembly case for on-site assembly of SC RJ PCF connectors, comprising a stripping tool, buffer stripping tool, Kevlar cutters, fiber breaking tool and microscope	**6GK1900-0NL00-0AA0**

	Article No.
Power Plug PRO 1 plug (IP65/67) for on-site assembly (5-core)	**6GK1907-0AB10-6AA0**
SITOP compact 24 V/0.6 A 1-phase power supply with wide-range input 85 – 264V AC/ 110 – 300 V DC, stabilized output voltage 24 V, rated output current value 0.6 A, slim design	**6EP1331-5BA00**
C-PLUG Removable medium for simple replacement of devices in event of fault; for saving of configuration and application data, can be used in SIMATIC NET products with C-PLUG slot	**6GK1900-0AB00**

1) Special fiber-optic cables, lengths and accessories available on request

2) Special tools and specially trained personnel are required for pre-assembling glass fiber-optic cables

Note:

For further components and accessories, especially cable material and connectors as well as tools and supplementary material for assembly, refer to the sections "FastConnect" (page 10/41), "ITP cables and connectors" (page 10/45) and "Fiber-optic cables" (page 10/46) as well as to Catalog IK PI.

Overview

Switches of the SCALANCE X-300 product line with compact design, standard version

Electrical and/or optical line, star or ring topologies can be implemented with the switches of the SCALANCE X-300 product line. Switches with Fast Ethernet and/or Gigabit Ethernet ports are available for this purpose.

The switches of the SCALANCE X-300 product line are available in different designs:

- Compact design
  - Standard version X-300
  - Partially modular version X-300 M
- Rack design: Modular rack for installation in 19" control cabinets
  - Standard version XR-300 M
  - PoE version XR-300 M PoE (Power over Ethernet)
  - EEC version XR-300 M EEC (Enhanced Environmental Conditions)

Product range for SIMATIC PCS 7

Compact design, standard version

Fast and Gigabit Ethernet ports

- SCALANCE X310
  - 3 electrical Gigabit Ethernet RJ45 ports (1000BaseTX)
  - 7 electrical Fast Ethernet RJ45 ports (10/100BaseTX)
- SCALANCE X308-2
  - 2 optical Gigabit Ethernet SC ports for glass multi-mode FOC (1000BaseSX) up to 750 m
  - 1 electrical Gigabit Ethernet RJ45 port (1000BaseTX)
  - 7 electrical Fast Ethernet RJ45 ports (10/100BaseTX)
- SCALANCE X308-2LD
  - 2 optical Gigabit Ethernet SC ports for glass single-mode FOC (1000BaseLX) up to 10 km
  - 1 electrical Gigabit Ethernet RJ45 port (1000BaseTX)
  - 7 electrical Fast Ethernet RJ45 ports (10/100BaseTX)
- SCALANCE X308-2LH
  - 2 optical Gigabit Ethernet SC ports for glass single-mode FOC (1000BaseLX) up to 40 km
  - 1 electrical Gigabit Ethernet RJ45 port (1000BaseTX)
  - 7 electrical Fast Ethernet RJ45 ports (10/100BaseTX)
- SCALANCE X308-2LH+
  - 2 optical Gigabit Ethernet SC ports for glass single-mode FOC (1000BaseLX) up to 70 km
  - 1 electrical Gigabit Ethernet RJ45 port (1000BaseTX)
  - 7 electrical Fast Ethernet RJ45 ports (10/100BaseTX)
- SCALANCE X307-3
  - 3 optical Gigabit Ethernet SC ports for glass multi-mode FOC (1000BaseSX) up to 750 m
  - 7 electrical Fast Ethernet RJ45 ports (10/100BaseTX)
- SCALANCE X307-3LD
  - 3 optical Gigabit Ethernet SC ports for glass single-mode FOC (1000BaseLX) up to 10 km
  - 7 electrical Fast Ethernet RJ45 ports (10/100BaseTX)

Fast Ethernet ports

- SCALANCE X310FE
  - 10 electrical Fast Ethernet RJ45 ports (10/100BaseTX)
- SCALANCE X306-1LD FE
  - 6 electrical Fast Ethernet RJ45 ports (10/100BaseTX)
  - 1 optical Fast Ethernet SC port (100BaseFX) for glass single-mode FOC up to 26 km
- SCALANCE X320-1FE
  - 20 electrical Fast Ethernet RJ45 ports (10/100BaseTX)
  - 1 optical Fast Ethernet SC port (100BaseFX) for glass multi-mode FOC up to 5 km
- SCALANCE X320-3LD FE
  - 20 electrical Fast Ethernet RJ45 ports (10/100BaseTX)
  - 1 optical Fast Ethernet SC port (100BaseFX) for glass multi-mode FOC up to 5 km
  - 2 optical Fast Ethernet SC ports (100BaseFX) for glass single-mode FOC up to 26 km

Compact design, semi-modular version

Gigabit Ethernet ports

- SCALANCE X308-2M
  - 4 electrical Gigabit Ethernet RJ45 ports (1000BaseTX)
  - 2 slots for 2-port Media modules 10/100/1000 Mbps, electrical or optical

SCALANCE X308-2M

Rack design, standard version

- SCALANCE XR324-12M (power supply connection and data cable outlet at front/back)
  with power supply unit 1 x 24 V DC or 1 x 110 to 230 V AC
  - 12 slots for 2-port Media modules 10/100/1000 Mbps, electrical or optical

Overview (continued)

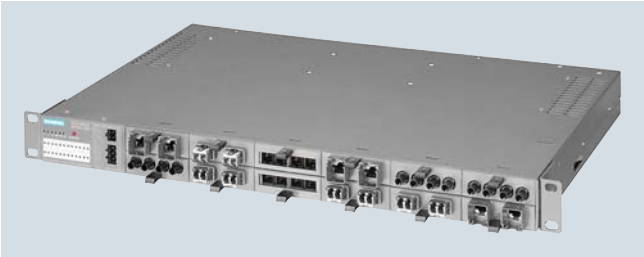

SCALANCE XR324-12M

Rack design, PoE version

- SCALANCE XR324-4M PoE (power supply connection and data cable outlet at front/back)
  with power supply unit 1 x 24 V DC
  - 16 electrical Gigabit Ethernet RJ45 ports (1000BaseTX)
  - 4 slots for 2-port Media modules 10/100/1000 Mbps, electrical or optical

SCALANCE XR324-4M PoE

Rack design, EEC version

- SCALANCE XR324-4M EEC (data cable outlet at front/back) with 24 V DC power supply or 100 to 240 V AC / 60 to 250 V DC, each single (1 x) or redundant (2 x)
  - 16 electrical Gigabit Ethernet RJ45 ports (1000BaseTX)
  - 4 slots for 2-port Media modules 10/100/1000 Mbps, electrical or optical

Special features

		Hardware																	
	Type of device	Connection to S7 backplane bus	Format module S7	PC module	Flat type of construction	Box type of construction	19" type of construction	Rugged, compact housing	Modular design	10 Gigabit Ethernet	Gigabit Ethernet	PoE (Power over Ethernet)	LED diagnosis	SIMATIC environment	Redundant power supply (2 × 24 V DC)	External supply for integrated switch	Signal contact	Local display (SET pushbutton)	C-PLUG slot
SCALANCE X-300	X306-1LD FE							•					•	•	•		•	•	•
	X307-3							•			•		•	•	•		•	•	•
	X307-3LD							•			•		•	•	•		•	•	•
	X308-2							•			•		•	•	•		•	•	•
	X308-2LD							•			•		•	•	•		•	•	•
	X308-2LH							•			•		•	•	•		•	•	•
	X308-2LH+							•			•		•	•	•		•	•	•
	X308-2M							•	•		•		•	•	•		•	•	•
	X310							•			•		•	•	•		•	•	•
	X310FE							•					•	•	•		•	•	•
	X320-1FE							•					•	•	•		•	•	•
	X320-3LD FE							•					•	•	•		•	•	•
	XR324-12M						•		•		•		•	•	•		•	•	•
	XR324-4M PoE						•		•		•	•	•	•	•		•	•	•
	XR324-4M EEC						•		•		•		•	•	•		•	•	•

• applies

G_PCS7_XX_00306

SCALANCE X-300 features, hardware

Overview (continued)

	Type of device	Software																										
		Security Integrated (Firewall/VPN)	PROFINET diagnosis	Topology support (LLDP)	Command Line Interface/Telnet	Web based Management	Configuration with STEP 7	SNMP	Ring redundancy incl. RM-functionality	Standby redundancy	IRT capability	VLAN (Virtual Local Area Network)	GVRP (Generic VLAN Registaration Protocol)	STP/RSTP (Spanning Tree Protocol/ Rapid Spanning Tree Protocol)	Passive Listening	IGMP Snooping/Querier (Internet Group Management Protocol)	GMRP (Generic Multicast Protocol)	Broadcast/Multicast/Unicast Limiter	Broadcast blocking	DHCP Option 82 (Dynamic Host Configuration Protocol)	IP Access List	Access Control List (MAC)	IEEE 802.1x (Radius)	Link Aggregation	Static Routing	RIPv2 (Dynamic Routing)	OSPFv2 (Dynamic Routing)	VRRP, Router Redundancy (Virtual Router Redundancy Protocol)
SCALANCE X-300	X306-1LD FE		•	•	•	•	•	•	•	•		•	•	•	•	•	•	•	•	•		•	•	•				
	X307-3		•	•	•	•	•	•	•	•		•	•	•	•	•	•	•	•	•		•	•	•				
	X307-3LD		•	•	•	•	•	•	•	•		•	•	•	•	•	•	•	•	•		•	•	•				
	X308-2		•	•	•	•	•	•	•	•		•	•	•	•	•	•	•	•	•		•	•	•				
	X308-2LD		•	•	•	•	•	•	•	•		•	•	•	•	•	•	•	•	•		•	•	•				
	X308-2LH		•	•	•	•	•	•	•	•		•	•	•	•	•	•	•	•	•		•	•	•				
	X308-2LH+		•	•	•	•	•	•	•	•		•	•	•	•	•	•	•	•	•		•	•	•				
	X308-2M		•	•	•	•	•	•	•	•		•	•	•	•	•	•	•	•	•		•	•	•				
	X310		•	•	•	•	•	•	•	•		•	•	•	•	•	•	•	•	•		•	•	•				
	X310FE		•	•	•	•	•	•	•	•		•	•	•	•	•	•	•	•	•		•	•	•				
	X320-1FE		•	•	•	•	•	•	•	•		•	•	•	•	•	•	•	•	•		•	•	•				
	X320-3LD FE		•	•	•	•	•	•	•	•		•	•	•	•	•	•	•	•	•		•	•	•				
	XR324-12M		•	•	•	•	•	•	•	•		•	•	•	•	•	•	•	•	•		•	•	•				
	XR324-4M PoE		•	•	•	•	•	•	•	•		•	•	•	•	•	•	•	•	•		•	•	•				
	XR324-4M EEC		•	•	•	•	•	•	•	•		•	•	•	•	•	•	•	•	•		•	•	•				

• applies

G_PCS7_XX_00307

SCALANCE X-300 features, software

Design

Summary of interfaces

Module type	Integrated ports, type and number				Number of Media module ports (Port types, see table Overview of Media modules)
	Gigabit Ethernet 1000 Mbps		Fast Ethernet 100 Mbps		
	Electrical (TP)	**Optical (FO)**	**Electrical (TP)**	**Optical (FO)**	
	RJ45 socket	SC socket	RJ45 socket	SC socket	
X-300 compact design					
X320-1FE	–	–	20	1 (multi-mode) for up to 5 km	–
X320-3LD FE	–	–	20	1 (multi-mode) for up to 5 km and 2 (single-mode) for up to 26 km	–
X310	3	–	7	–	–
X310FE	–	–	10	–	–
X308-2	1	2 (multi-mode) for up to 750 m	7	–	–
X308-2LD	1	2 (singlemode) for up to 10 km	7	–	–
X308-2LH	1	2 (singlemode) for up to 40 km	7	–	–
X308-2LH+	1	2 (singlemode) for up to 70 km	7	–	–
X307-3	–	3 (multi-mode) for up to 750 m	7	–	–
X307-3LD	–	3 (singlemode) for up to 10 km	7	–	–
X-306-1LD FE	–	–	6	1 (singlemode) for up to 26 km	–
X-308-2M	4	–	–	–	4 (2 x 2)
Rack design XR-300					
XR324-12M	–	–	–	–	24 (12 x 2)
XR324-4M PoE	16 (including 8 PoE)	–	–	–	8 (4 x 2)
XR324-4M EEC	16	–	–	–	8 (4 x 2)

Boundary conditions for network configuration

Network configuration X-300 compact design

- Maximum line length between two modules for multi-mode fiber-optic cables:
  - 5 km at 100 Mbps
  - 750 m at 1 Gbps
- Maximum line length between two modules for single-mode fiber-optic cables:
  - 26 km at 100 Mbps
  - 10 to 70 km at 1 Gbps
- Maximum cable length of the TP cable between two SCALANCE X switches:
  - Max. 100 m with IE FC Cable 2 x 2 and IE FC RJ45 Plug 180
  - Max. 100 m at 1 Gbps with IE FC Standard Cable 4 x 2 (90 m), IE FC RJ45 Modular Outlet and patch cable (10 m)
  - Max. 10 m using patches with TP cord

Network configuration rack design XR-300

- Maximum line length between two modules for multi-mode fiber-optic cables:
  - 5 km at 100 Mbps
  - 750 m at 1 Gbps
- Maximum line length between two modules for single-mode fiber-optic cables:
  - 26 km to 70 km at 100 Mbps
  - 10 to 120 km at 1 Gbps
- Maximum cable length of the TP cable between two SCALANCE X switches:
  - Max. 100 m with IE FC Cable 2 x 2 and IE FC RJ45 Plug 180
  - Max. 100 m at 1 Gbps with IE FC Standard Cable 4 x 2 (90 m), IE FC RJ45 Modular Outlet and patch cable (10 m)
  - Max. 10 m using patches with TP cord

Design (continued)

Media modules for SCALANCE X-300/XR-300

The use of 2-port Media modules (electrical or optical) lets you:

- Expand the network by subsequent installation of additional Media modules in free Media module slots
- Change the cabling technology (e.g. conversion from copper to fiber-optic cables, or from multi-mode to single-mode FOC)

Product versions of Media modules and SFP plug-in transceivers

	Type and quantity of ports						
	Gigabit Ethernet			Fast Ethernet			Max. distance
	10 / 100 / 1000 Mbit/s	1000 Mbit/s		100 Mbit/s			
	Electrical	Optical		Optical			
Type of module	Twisted Pair	Multimode	Singlemode	Multimode	Singlemode	POF/PCF	
Media modules							
MM992-2CUC	2x RJ45 1)						100 m
MM992-2CUC (C)	2x RJ45 1)						100 m
MM992-2CU	2x RJ45						100 m
MM992-2M12 (C)	2x M12 4)						100 m
MM992-2VD	2x RJ45						depending on cable *
MM991-2				2x BFOC			5 km
MM991-2FM				2x BFOC			5 km
MM991-2LD					2x BFOC		26 km
MM991-2				2x SC			5 km
MM991-2LD					2x SC		26 km
MM991-2LH+					2x SC		70 km
MM991-2P						2x SCRJ	50 m / 100 m
MM992-2		2x SC					750 m
MM992-2 (C)		2x SC					750 m
MM992-2LD			2x SC				10 km
MM992-2LH			2x SC				40 km
MM992-2LH+			2x SC				70 km
MM992-2ELH			2x SC				120 km
MM992-2SFP		2x LC2)	2x LC 2)	2x LC 2)	2x LC 2)		
SFP modules 3)							
SFP991-1				1x LC			5 km
SFP991-1LD					1x LC		26 km
SFP991-1LH+					1x LC		70 km
SFP991-1ELH200					1x LC		200 km
SFP992-1		1x LC					750 m
SFP992-1LD			1x LC				10 km
SFP992-1LH			1x LC				40 km
SFP992-1LH+			1x LC				70 km
SFP992-1ELH			1x LC				120 km

G_IK10_XX_10277

1) with retaining collars
2) The MM392-2SFP SFP slot module can accommodate up to two 1-port SFP modules
3) Can only be plugged into an MM392-2SFP slot module
4) M12 X-coded
(C) Conformal Coating
* see media modules manual

Overview of Media modules and SFP plug-in transceivers for SCALANCE X-300

Design (continued)

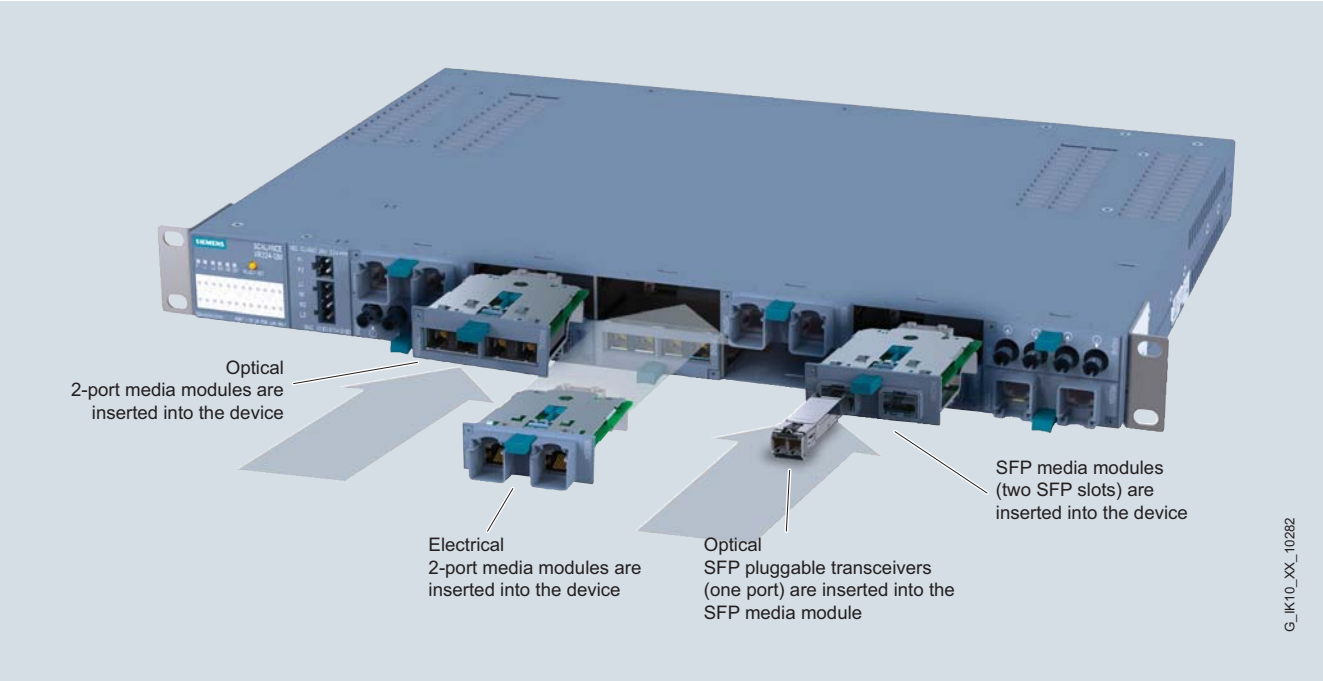

Ordering data

	Article No.
Industrial Ethernet Switches SCALANCE X-300, compact design	
Standard design with Fast Ethernet and Gigabit Ethernet ports	
SCALANCE X310 3 × 10/100/1000 Mbit/s RJ45 ports (1000BaseTX) 7 × 10/100 Mbit/s RJ45 ports (10/100BaseTX)	**6GK5310-0FA10-2AA3**
SCALANCE X308-2 2 × 1000 Mbit/s multi-mode SC ports (1000BaseSX) 1 × 10/100/1000 Mbit/s RJ45 port (1000BaseTX) 7 × 10/100 Mbit/s RJ45 ports (10/100BaseTX)	**6GK5308-2FL10-2AA3**
SCALANCE X308-2LD 2 × 1000 Mbit/s single-mode SC ports (1000BaseLX) for up to 10 km 1 × 10/100/1000 Mbit/s RJ45 port (1000BaseTX) 7 × 10/100 Mbit/s RJ45 ports (10/100BaseTX)	**6GK5308-2FM10-2AA3**
SCALANCE X308-2LH 2 × 1000 Mbit/s single-mode SC ports (1000BaseLX) for up to 40 km 1 × 10/100/1000 Mbit/s RJ45 port (1000BaseTX) 7 × 10/100 Mbit/s RJ45 ports (10/100BaseTX)	**6GK5308-2FN10-2AA3**
SCALANCE X308-2LH+ 2 × 1000 Mbit/s single-mode SC ports (1000BaseLX) for up to 70 km 1 × 10/100/1000 Mbit/s RJ45 port (1000BaseTX) 7 × 10/100 Mbit/s RJ45 ports (10/100BaseTX)	**6GK5308-2FP10-2AA3**

	Article No.
SCALANCE X307-3 3 × 1000 Mbit/s multi-mode SC ports (1000BaseSX) 7 × 10/100 Mbit/s RJ45 ports (10/100BaseTX)	**6GK5307-3BL10-2AA3**
SCALANCE X307-3LD 3 × 1000 Mbit/s single-mode SC ports (1000BaseLX) for up to 10 km 7 × 10/100 Mbit/s RJ45 ports (10/100BaseTX)	**6GK5307-3BM10-2AA3**
Standard version with Fast Ethernet ports	
SCALANCE X310FE 10 × 10/100 Mbit/s RJ45 ports (10/100BaseTX)	**6GK5310-0BA10-2AA3**
SCALANCE X306-1LD FE 1 × 100 Mbit/s single-mode SC port (100BaseFX) for up to 26 km 6 × 10/100 Mbit/s RJ45 ports (10/100BaseTX)	**6GK5306-1BF00-2AA3**
SCALANCE X320-1FE 1 × 100 Mbit/s multi-mode SC port (100BaseFX) for up to 5 km 20 × 10/100 Mbit/s RJ45-Ports (10/100BaseTX)	**6GK5320-1BD00-2AA3**
SCALANCE X320-3LD FE 1 × 100 Mbit/s multi-mode SC port (100BaseFX) for up to 5 km 2 × 100 Mbit/s single-mode SC port (100BaseFX) for up to 26 km 20 × 10/100 Mbit/s RJ45 ports (10/100BaseTX)	**6GK5320-3BF00-2AA3**
Partially modular version with Gigabit Ethernet ports	
SCALANCE X308-2M 4 × 10/100/1000 Mbit/s RJ45 ports (1000BaseTX) 2 × slots for 2-port Media modules 10/100/1000 Mbit/s, electrical or optical	**6GK5308-2GG00-2AA2**

Ordering data

	Article No.
Industrial Ethernet switches SCALANCE X-300, rack design (modular)	
Standard version	
SCALANCE XR324-12M 12 × slots for 2-port Media modules 10/100/1000 Mbit/s, electrical or optical	
24 V DC power supply	
• Data cable outlet at front	**6GK5324-0GG00-1AR2**
• Data cable outlet at rear	**6GK5324-0GG00-1HR2**
110 to 230 V AC power supply	
• Data cable outlet at front	**6GK5324-0GG00-3AR2**
• Data cable outlet at rear	**6GK5324-0GG00-3HR2**
PoE version	
SCALANCE XR324-4M PoE 16 × 10/100/1000 Mbit/s RJ45 ports (1000BaseTX) of which eight support PoE 4 × slots for 2-port Media modules 10/100/1000 Mbit/s, electrical or optical	
24 V DC power supply	
• Data cable outlet at front	**6GK5324-4QG00-1AR2**
• Data cable outlet at rear	**6GK5324-4QG00-1HR2**
EEC version	
SCALANCE XR324-4M EEC 16 × 10/100/1000 Mbps RJ45 ports (1000BaseTX) 4 × slots for 2-port Media modules 10/100/1000 Mbit/s, electrical or optical	
1 × 24 V DC power supply	
• Data cable outlet at front	**6GK5324-4GG00-1ER2**
• Data cable outlet at rear	**6GK5324-4GG00-1JR2**
1 × 100 to 240 V AC/60 to 250 V DC power supply	
• Data cable outlet at front	**6GK5324-4GG00-3ER2**
• Data cable outlet at rear	**6GK5324-4GG00-3JR2**
2 × 24 V DC power supply	
• Data cable outlet at front	**6GK5324-4GG00-2ER2**
• Data cable outlet at rear	**6GK5324-4GG00-2JR2**
2 × 100 to 240 V AC/60 to 250 V DC power supply	
• Data cable outlet at front	**6GK5324-4GG00-4ER2**
• Data cable outlet at rear	**6GK5324-4GG00-4JR2**

	Article No.
Media modules	
Electrical Media modules	
with 2 × 10/100/1000 Mbit/s RJ45 ports, electrical	
• MM992-2CUC with retaining sleeve	**6GK5992-2GA00-8AA0**
• MM992-2CUC with retaining sleeve and coated PCBs (conformal coating)	**6GK5992-2GA00-8FA0**
• MM992-2CU without retaining sleeve	**6GK5992-2SA00-8AA0**
• MM992-2VD with retaining collar and additional two-wire transmission function (variable distance) for establishing Ethernet connections via non-Ethernet conformant cables as well. Bridgeable distance, depending ovn the quality of the cable	**6GK5992-2VA00-8AA0**
with 2 x 10/100/1000 Mbps M12 ports, electrical	
• MM992-2 M12 interface (x-coded) and coated PCBs (conformal coating)	**6GK5992-2HA00-0AA0**
Optical Media modules	
with 2 × 100 Mbit/s BFOC ports, optical	
• MM991-2 multi-mode, glass, up to 5 km	**6GK5991-2AB00-8AA0**
• MM991-2LD single-mode, glass, up to 26 km	**6GK5991-2AC00-8AA0**
• MM991-2FM multi-mode, glass, up to 5 km with fiber-optic cable diagnostics	**6GK5991-2AB01-8AA0**
with 2 × 100 Mbit/s SC ports, optical	
• MM991-2 multi-mode, glass, up to 5 km	**6GK5991-2AD00-8AA0**
• MM991-2LD single-mode, glass, up to 26 km	**6GK5991-2AF00-8AA0**
• MM991-2LH+ single-mode, glass, up to 70 km	**6GK5991-2AE00-8AA0**
with 2 × 100 Mbps SC RJ ports, optical	
• MM991-2P, PO fiber-optic cable up to 50 m	**6GK5991-2AH00-8AA0**
with 2 × 1000 Mbit/s SC ports, optical	
• MM992-2 multi-mode, glass, up to 750 m	**6GK5992-2AL00-8AA0**
• MM992-2 multi-mode, glass, up to 750 m, coated PCBs (conformal coating)	**6GK5992-2AL00-8FA0**
• MM992-2LD single-mode, glass, up to 10 km	**6GK5992-2AM00-8AA0**
• MM992-2LH single-mode, glass, up to 40 km	**6GK5992-2AN00-8AA0**
• MM992-2LH+ single-mode, glass, up to 70 km	**6GK5992-2AP00-8AA0**
• MM992-2ELH single-mode, glass, up to 120 km	**6GK5992-2AQ00-8AA0**
with 2 × 100/1000 Mbit/s for SFP plug-in transceiver, optical	
• MM992-2SFP for SFP plug-in transceivers with 1 × 100 Mbit/s or 1 × 1000 Mbit/s multi-mode or single-mode, glass	**6GK5992-2AS00-8AA0**

Ordering data

	Article No.
SFP plug-in transceiver, optical	
with 1 × 100 Mbit/s LC port, optical	
• SFP991-1 multi-mode, glass, up to 5 km	**6GK5991-1AD00-8AA0**
• SFP991-1LD single-mode, glass, up to 26 km	**6GK5991-1AF00-8AA0**
• SFP991-1LH+ single-mode, glass, up to 70 km	**6GK5991-1AE00-8AA0**
• SFP991-1ELH200 single-mode, glass, up to 200 km	**6GK5991-1AE30-8AA0**
with 1 × 1000 Mbit/s LC port, optical	
• SFP992-1 multi-mode, glass, up to 750 m	**6GK5992-1AL00-8AA0**
• SFP992-1LD single-mode, glass, up to 10 km	**6GK5992-1AM00-8AA0**
• SFP992-1LH single-mode, glass, up to 40 km	**6GK5992-1AN00-8AA0**
• SFP992-1LH+ single-mode, glass, up to 70 km	**6GK5992-1AP00-8AA0**
• SFP992-1ELH single-mode, glass, up to 120 km	**6GK5992-1AQ00-8AA0**
Accessory for Industrial Ethernet switches	
SITOP compact 24 V/0.6 A For Industrial Ethernet switches in compact design 1-phase power supply with wide-range input 85 – 264V AC/ 110 – 300 V DC, stabilized output voltage 24 V, rated output current value 0.6 A, slim design	**6EP1331-5BA00**
SITOP compact, 2.5 A for SCALANCE XR324-12M 1-phase power supply with wide-range input 85 – 264V AC, stablized output voltage 24 V, output current rated value 2.5 A	**6EP1332-5BA00**
SITOP PSU200M, 1-phase and 2-phase, 24 V DC, 5 A For SCALANCE XR324-4M PoE and SCALANCE XR324-4M EEC Stabilized power supply; input: 120/230... 500 V AC, output: 24 V DC/5 A	**6EP1333-3BA10**
IE FC TP Standard Cable GP 2×2 (type A) 4-core, shielded TP installation cable for connection to IE FC Outlet RJ45/IE FC RJ45 plug; PROFINET-compliant; with UL approval; sold by the meter, max. length 1 000 m, minimum order 20 m	**6XV1840-2AH10**
IE FC TP Standard Cable GP 4×2 8-core, shielded TP installation cable for connection to IE FC RJ45 Modular Outlet for universal application; with UL approval; sold by the meter, max. quantity 1 000 m, minimum order 20 m	**6XV1870-2E**
IE TP Cord RJ45/RJ45 TP cable 4×2 with two RJ45 connectors	
• 0.5 m	**6XV1870-3QE50**
• 1 m	**6XV1870-3QH10**
• 2 m	**6XV1870-3QH20**
• 6 m	**6XV1870-3QH60**
• 10 m	**6XV1870-3QN10**

	Article No.
FO Standard Cable GP 50/125/1400[2] Multi-mode cable, sold by the meter, max. length 1 000 m; minimum order 20 m	**6XV1873-2A**
FO Robust Cable GP 4E9/125/90 Single-mode cable, sold by the meter, max. length 1 000 m; minimum order 20 m	**6XV1843-2R**
Glass fiber-optic cable, pre-assembled with 4 SC connectors[1]	
• 80 m	**6XV1873-6AN80**
• 100 m	**6XV1873-6AT10**
• 150 m	**6XV1873-6AT15**
• 200 m	**6XV1873-6AT20**
• 300 m	**6XV1873-6AT30**
FC FO Standard Cable GP 62.5/200/230 FC FO standard cable for fixed routing indoors with PVC sheath; sold by the meter, max. length 1 000 m; minimum order 20 m	**6XV1847-2A**
IE FC RJ45 Plug 180 2×2 RJ45 plug connector for Industrial Ethernet with a sturdy metal enclosure and integrated insulation displacement contacts for connecting Industrial Ethernet FC installation cables; with 180° cable outlet; for network components and CPs/ CPUs with Industrial Ethernet interface	
• 1 pack = 1 unit	**6GK1901-1BB10-2AA0**
• 1 pack = 10 units	**6GK1901-1BB10-2AB0**
• 1 pack = 50 units	**6GK1901-1BB10-2AE0**
IE FC RJ45 Plug 4×2 RJ-45 plug connector for Industrial Ethernet (10/100/1000 Mbps) with a sturdy metal enclosure and integrated insulation displacement contacts for connecting Industrial Ethernet FC installation cables; with 180° cable outlet; for network components and CPs/CPUs with Industrial Ethernet interface	
• 1 pack = 1 unit	**6GK1901-1BB11-2AA0**
• 1 pack = 10 units	**6GK1901-1BB11-2AB0**
• 1 pack = 50 units	**6GK1901-1BB11-2AE0**
FC SC plug Screw connector for on-site assembly on FC fiber-optic cable; (1 pack = 10 duplex plugs + cleaning cloths)	**6GK1900-1LB00-0AC0**
IE FC RJ45 Modular Outlet FastConnect RJ45 Outlet for Industrial Ethernet with interface for insertion of a replaceable insert	
• with 2FE insert; replaceable insert for 2 × 100 Mbit/s interface	**6GK1901-1BE00-0AA1**
• with 1GE insert; replaceable insert for 1 × 1000 Mbps interface	**6GK1901-1BE00-0AA2**
IE FC Stripping Tool Pre-adjusted stripping tool for fast stripping of the Industrial Ethernet FC cables	**6GK1901-1GA00**
FC FO termination kit Assembly case for on-site assembly of FC SC and FC BFOC connectors to FC FO standard cable, comprising a stripping tool, Kevlar cutters, fiber breaking tool and microscope	**6GK1900-1GL00-0AA0**

[1] Special fiber-optic cables, lengths and accessories available on request

[2] Special tools and specially trained personnel are required for pre-assembling glass fiber-optic cables

Overview

SCALANCE XM408-8C Industrial Ethernet switch

The switches of the SCALANCE XM-400 product line allow for the flexible design of electrical or optical Industrial Ethernet networks with high availability. They are ideally suited for configuring the plant bus and the terminal bus of the SIMATIC PCS 7 process control system in electrical or optical Gigabit ring technology (non-redundant and redundant rings). The network topology and number and type of ports can be easily adapted to the structure of the system.

The SCALANCE XM-400 switches replace the switches of the SCALANCE X-400 family (SCALANCE X414-3E and X408-2).

Product range for SIMATIC PCS 7

- Basic devices with integrated Gigabit Ethernet twisted pair interfaces (10/100/1000 Mbit/s)
  - XM416-4C with 16 ports (of which 4 are combo ports)
  - XM408-8C with 8 combo ports
  - XM408-4C with 8 ports (of which 4 are combo ports)
- Port extender for flexible expansion of the basic device up to 24 ports (8 RJ45 ports, 8 RJ45 ports with Power over Ethernet or 8 slots for SFP plug-in transceiver)

Note:

A combo port consists of an electric port and a slot for a plug-in transceiver. Only one of the two can be active at any one time. Inserting a plug-in transceiver results in disabling of the electric port.

Overview (continued)

Special features

	Type of device	Hardware																	
		Connection to S7 backplane bus	Format module S7	PC module	Flat type of construction	Box type of construction	19" type of construction	Rugged, compact housing	Modular design	10 Gigabit Ethernet	Gigabit Ethernet	PoE (Power over Ethernet)	LED diagnosis	SIMATIC environment	Redundant power supply (2 x 24 V DC)	External supply for integrated switch	Signal contact	Local display (SET pushbutton)	PLUG slot
SCALANCE X-400	X408-2								•		•		•	•	•		•	•	•
	X414-3E								•		•		•	•	•		•	•	•
	XM416-4C		•						•		•		•	•	•		•	•	•
	XM408-8C		•						•		•		•	•	•		•	•	•
	XM408-4C		•						•		•		•	•	•		•	•	•
	PE408		•						•		•		•	•				•	
	PE400-8SFP		•						•		•		•	•				•	
	PE408 PoE		•						•		•	•	•	•				•	

	Type of device	Software																											
		Security Integrated (Firewall/VPN)	PROFINET diagnosis	Topology support (LLDP)	Command Line Interface / Telnet	Web based Management	Configuration with STEP 7 / TIA	SNMP	Ring redundancy incl. RM-functionality	Standby redundancy	IRT capability	VLAN (Virtual Local Area Network)	GVRP (Generic VLAN Registaration Protocol)	STP/ RSTP (Spanning Tree Protocol/ Rapid Spanning Tree Protocol)	Passive Listening	IGMP Snooping/Querier (Internet Group Management Protocol)	GMRP (Generic Multicast Protocol)	Broadcast/ Multicast/ Unicast Limiter	Broadcast blocking	DHCP Option 82 (Dynamic Host Configuration Protocol)	Access Control List (IP)	Access Control List (MAC)	IEEE 802.1x (Radius)	Link Aggregation	Static Routing	RIPv2 (Dynamic Routing)	OSPFv2 (Dynamic Routing)	VRRP, Router Redundancy (Virtual Router Redundancy Protocol)
SCALANCE X-400	X408-2		•	•	•	•	•	•	•	•		•	•	•	•	•	•	•	•	•		•	•	•					
	X414-3E		•	•	•	•	•	•	•	•		•	•	•	•	•	•	•	•	•		•	•	•	•	•	•	•	
	XM416-4C		•	•	•	•	•	•	•	•		•	•	•	•	•	•	•	•	•	•	•	•	•	•	•	•	•	
	XM408-8C		•	•	•	•	•	•	•	•		•	•	•	•	•	•	•	•	•	•	•	•	•	•	•	•	•	
	XM408-4C		•	•	•	•	•	•	•	•		•	•	•	•	•	•	•	•	•	•	•	•	•	•	•	•	•	

• applies

G_IK10_XX_10309

SCALANCE X-400 and XM-400 features

Design

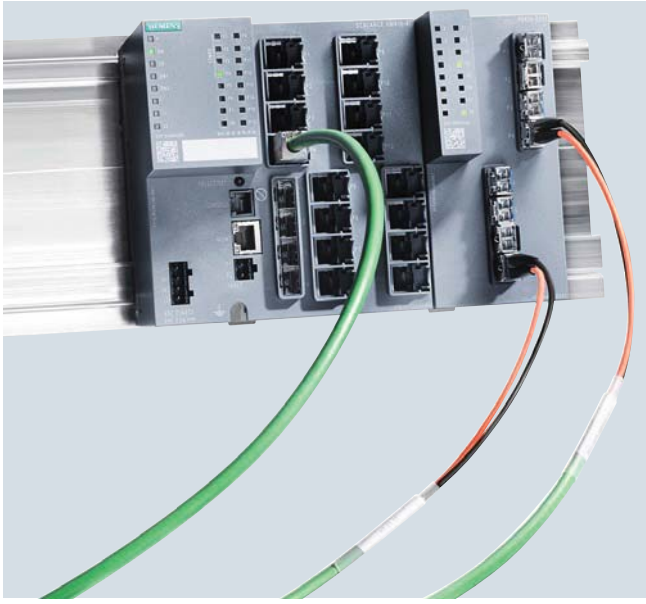

SCALANCE XM416-4C with PE400-8SFP port extender

The modular SCALANCE XM-400 Industrial Ethernet switches consist of various basic devices (8 or 16 ports) which can be expanded by port extenders and plug-in transceivers up to 24 ports (10/100/1000 Mbit/s). Depending on the configuration, they support both electrical and optical transmission Media. The rugged, industry-compatible enclosure with IP20 protection is suitable for mounting on rails.

XM-400 basic devices

- XM416-4C with a total of 16 ports, of which
  - 12 × 10/100/1000 Mbit/s RJ45 ports with retaining collar
  - 4 combo ports (4 × 10/100/1000 Mbit/s RJ45 ports with retaining collar and 4 SFP slots 100 or 1000 Mbit/s for alternative use)
  - 1 port extender with 8 ports can be connected
- XM408-8C with a total of 8 ports, of which
  - 8 combo ports (8 × 10/100/1000 Mbit/s RJ45 ports with retaining collar and 8 SFP slots 100 or 1000 Mbit/s for alternative use)
  - 2 port extenders with 8 ports each can be connected
- XM408-4C with a total of 8 ports, of which
  - 4 × 10/100/1000 Mbit/s RJ45 ports with retaining collar
  - 4 combo ports (4 × 10/100/1000 Mbit/s RJ45 ports with retaining collar and 4 slots for ST plug-in transceiver 100 Mbit/s or SC plug-in transceiver 1000 Mbit/s for alternative use)
  - 2 port extenders with 8 ports each can be connected

All SCALANCE XM-400 basic devices are additionally equipped with:

- Console port (serial interface RJ11) and management port (100 Mbit/s, RJ45) for on-site parameterization/diagnostics and firmware update
- Slot for C-PLUG swap medium for simple device exchange (included in scope of delivery) or KEY-PLUG XM-400 (optional) for additional activation of Layer 3 functions
- Freely-configurable, floating signal outputs
- LEDs and selector for display of mode and status information
- Grounding bolts for defined ground connection
- Two power supplies for protection against power failure
- Connection for a port extender on the right (tool-free installation)

XM-400 port extender

- PE408 with 8 × 10/100/1000 Mbit/s RJ45 ports with retaining collar
- PE400-8SFP with 8 SFP slots 100 or 1000 Mbit/s
- PE408PoE with 8 × 10/100/1000 Mbit/s RJ45 ports, Power over Ethernet (PoE) according to IEEE 802.3at Type 2, and retaining collar; separate power supply required

SFP plug-in transceiver

The following SFP (Small Form-Factor Pluggable) transceivers can be used in the SFP slots:

- Optical SFP plug-in transceivers with 1 × 100 Mbit/s LC port
  - SFP991-1, multi-mode, glass, up to 5 km
  - SFP991-1LD, single-mode, glass, up to 26 km
  - SFP991-1LH+, single-mode, glass, up to 70 km
  - SFP991-1ELH200, single-mode, glass, up to 200 km
- Optical SFP plug-in transceivers with 1 × 1 Gbit/s LC port
  - SFP992-1, multi-mode, glass, up to 750 m
  - SFP992-1LD, single-mode, glass, up to 10 km
  - SFP992-1LH, single-mode, glass, up to 40 km
  - SFP992-1LH+, single-mode, glass, up to 70 km
  - SFP992-1ELH, single-mode, glass, up to 120 km

Plug-in transceiver for XM408-4C basic device

- ST plug-in transceiver, ST/BFOC connection, 100 Mbit/s
  - STP991-1, multi-mode FOC, up to 5 km
  - STP991-1LD, single-mode FOC, up to 26 km
- SC plug-in transceiver, SC connection, 1 Gbit/s
  - STP992-1, multi-mode FOC, up to 750 m
  - STP992-1LD, single-mode FOC, up to 10 km

Boundary conditions for network configuration with SCALANCE XM-400

- Maximum line length between 2 modules for multimode fiber-optic conductors:
  - 5 000 m at 100 Mbit/s
  - 750 m at 1 Gbit/s
- Maximum line length between 2 modules for single-mode fiber-optic conductors:
  - 200 km at 100 Mbit/s
  - 120 km at 1 Gbit/s
- Maximum length of installation cable:
  - 100 m at 100 Mbit/s with IE FC TP Cable 2 × 2 and IE FC Plug 180
  - Max. 90 m at 1 Gbit/s with IE FC TP cable 4 × 2, IE FC RJ45 modular outlet and patch cable (10 m)
  - 100 m at 1 Gbit/s with IE FC TP Cable 4 × 2 and IE FC Plug 4 × 2

Ordering data

	Article No.
SCALANCE XM-400 Industrial Ethernet switches	
Basic devices with 8 or 16 integrated Gigabit Ethernet twisted pair interfaces (10/100/1000 Mbit/s); can be expanded up to 24 × 1000 Mbit/s using port extenders	
Integrated redundancy manager, IT functions (RSTP, VLAN,..), PROFINET IO-Device, network management via SNMP and Web server; including operating instructions, Industrial Ethernet manual and configuration software on CD	
C-PLUG included in scope of supply	
SCALANCE XM416-4C Basic device with 16 × 10/100/1000 Mbit/s, of which 12 × RJ45 ports and 4 × RJ45/SFP combo ports	
• IP routing in combination with KEY-PLUG	**6GK5416-4GS00-2AM2**
• IP routing integrated	**6GK5416-4GR00-2AM2**
SCALANCE XM408-8C Basic device with 8 × 10/100/1000 Mbit/s, of which 8 × RJ45/SFP combo ports	
• IP routing in combination with KEY-PLUG	**6GK5408-8GS00-2AM2**
• IP routing integrated	**6GK5408-8GR00-2AM2**
SCALANCE XM408-4C Basic device with 8 × 10/100/1000 Mbit/s, of which 4 × RJ45 ports and 4 × RJ45/ST-pluggable/SC-pluggable combo ports	
• IP routing in combination with KEY-PLUG	**6GK5408-4GP00-2AM2**
• IP routing integrated	**6GK5408-4GQ00-2AM2**
Port extender for SCALANCE XM-400	
Port extender for SCALANCE XM-400 basic devices	
• PE408; with 8 × 10/100/1000 Mbit/s TP ports (RJ45)	**6GK5408-0GA00-8AP2**
• PE400-8SFP; with 8 slots for 100/1000 Mbit/s SFP plug-in transceivers	**6GK5400-8AS00-8AP2**
• PE408PoE; with 8 × 10/100/1000 Mbit/s TP ports Power over Ethernet according to 802.3at Type 1/2	**6GK5408-0PA00-8AP2**

	Article No.
Plug-in transceivers	
SFP plug-in transceivers for XM-400	
• with 1 × 100 Mbit/s LC port, optical	
- SFP991-1 multi-mode, glass, up to 5 km	**6GK5991-1AD00-8AA0**
- SFP991-1LD single-mode, glass, up to 26 km	**6GK5991-1AF00-8AA0**
- SFP991-1LH+ single-mode, glass, up to 70 km	**6GK5991-1AE00-8AA0**
- SFP991-1ELH200 single-mode, glass, up to 200 km max.	**6GK5991-1AE30-8AA0**
• with 1 × 1000 Mbit/s LC port, optical	
- SFP992-1 multi-mode, glass, up to 750 m	**6GK5992-1AL00-8AA0**
- SFP992-1LD single-mode, glass, up to 10 km	**6GK5992-1AM00-8AA0**
- SFP992-1LH single-mode, glass, up to 40 km	**6GK5992-1AN00-8AA0**
- SFP992-1LH+ single-mode, glass, up to 70 km	**6GK5992-1AP00-8AA0**
- SFP992-1ELH single-mode, glass, up to 120 km	**6GK5992-1AQ00-8AA0**
ST and SC plug-in transceivers for XM408-4C basic device	
• STP991-1 100 Mbit/s, ST/BFOC connection, multi-mode FOC up to 3 km	**6GK5991-1AB00-8AA0**
• STP991-1LD 100 Mbit/s, ST/BFOC connection, single-mode FOC up to 26 km	**6GK5991-1AC00-8AA0**
• SCP992-1; 1000 Mbit/s, SC connection, multi-mode FOC up to 750 m	**6GK5992-1AJ00-8AA0**
• SCP992-1LD; 1000 Mbit/s, SC connection, single-mode FOC up to 10 km	**6GK5992-1AK00-8AA0**
Power supply for SCALANCE XM-400	
SIMATIC PM 1507 Stabilized 24-V power supply for SIMATIC S7-1500	
• Power supply S7-1500 PM1507 SIMATIC PM 1507 24 V/3 A stabilized power supply for SIMATIC S7-1500; input: 120/230 V AC, output: 24 V DC/3 A	**6EP1332-4BA00**
• Power supply S7-1500 PM1507 SIMATIC PM 1507 24 V/8 A stabilized power supply for SIMATIC S7-1500; input: 120/230 V AC, output: 24 V DC/8 A	**6EP1333-4BA00**
Further accessories	
KEY-PLUG XM-400 Swap medium for expansion of the device functions with IP routing (Layer 3), for integration of configuration data and for easy replacement of SCALANCE XM-400 in the event of a fault	**6GK5904-0PA00**
2-pin spring-loaded terminal block For connection of signaling contact (24 V DC) or for power supply with PoE (54 V DC); 5 units per pack	**6GK5980-0BB10-0AA5**
4-pin spring-loaded terminal block For connection of 24 V DC power supply; 5 units per pack	**6GK5980-1DB10-0AA5**

Overview

SCALANCE XR524-8C and SCALANCE XR552-12M

SCALANCE X-500	Hardware																	
Type of device	Connection to S7 backplane bus	Format module S7	PC module	Flat type of construction	Box type of construction	19" type of construction	Rugged, compact housing	Modular design	10 Gigabit Ethernet	Gigabit Ethernet	PoE (Power over Ethernet)	LED diagnosis	SIMATIC environment	Redundant power supply (2 x 24 V DC)	External supply	Signal contact	Local display (SET pushbutton)	PLUG slot
XR552-12M/ XR528-6M						•		•	•	•	•	•	•	•	•	•	•	•
XR524-8C						•		•		•		•	•	•		•	•	•

SCALANCE X-500	Software																												
Type of device	Security Integrated (Firewall/VPN)	PROFINET diagnosis	Topology support (LLDP)	Command Line Interface / Telnet	Web based Management	Configuration with STEP 7 / TIA	SNMP	Ring redundancy incl. RM-functionality	Standby redundancy	IRT capability	VLAN (Virtual Local Area Network)	GVRP (Generic VLAN Registaration Protocol)	STP/ RSTP (Spanning Tree Protocol/ Rapid Spanning Tree Protocol)	Passive Listening	IGMP Snooping/Querier (Internet Group Management Protocol)	GMRP (Generic Multicast Protocol)	Broadcast/ Multicast/ Unicast Limiter	Broadcast blocking	DHCP Option 82 (Dynamic Host Configuration Protocol)	Access Control List (IP)	Access Control List (MAC)	IEEE 802.1x (Radius)	Link Aggregation	Static Routing	RIPv2 (Dynamic Routing)	OSPFv2 (Dynamic Routing)	VRRP, Router Redundancy (Virtual Router Redundancy Protocol)	
XR552-12M/ XR528-6M		•	•	•	•	•	•	•	•		•	•	•	•	•	•	•	•	•		•	•	•	•	•	•	•	G_IK10_XX_10308
XR524-8C		•	•	•	•	•	•	•	•		•	•	•	•	•	•	•	•	•		•	•	•	•	•	•	•	

• applies

Functional overview of SCALANCE X-500

Overview (continued)

The high-performance, fully/partially modular SCALANCE XR-500 Industrial Ethernet switches of the SCALANCE X-500 product line are suitable for designing electrical and optical line, ring and star topologies with high data transfer rates up to 10 Gbit/s.

The devices are designed for high system availability, and are suitable for networking system components and distributed field devices in an industrial network as well as for integrating the industrial network in a corporate network. They have extensive diagnostics facilities.

To increase network availability, as many as 50 X-200, X-300, X-400 or X-500 switches cascaded in line can be connected into a ring (Ethernet with fast Media redundancy). Several rings can be redundantly linked through the standby function. Up to 52 nodes or subnets can be electrically connected together by means of a SCALANCE XR-500 as star point in a star topology.

The modularity and scalability of the SCALANCE XR-500 enable application-specific adaptation and expansion of the device configuration.

SCALANCE XR-500 product overview

The basic types of SCALANCE XR-500 designed for installation in 19" control cabinets correspond to IP20 protection. The data ports are either at the front or rear depending on the device version. Further expansion of the ports is possible using SFP or SFP+ plug-in transceivers and 4-port Media modules (electrical or optical).

The SCALANCE XR-500 devices differ as follows with regard to the number and type of slots:

- SCALANCE XR552-12M (ports at front/rear)
  fully modular; 4 integral SFP+ slots for optical SFP (1 Gbit/s) or SFP+ (10 Gbit/s) plug-in transceivers
  12 slots for 4-port Media modules 10/100/1000 Mbit/s, electrical or optical
- SCALANCE XR528-6M (ports at front/rear)
  fully modular; 4 integral SFP+ slots for optical SFP (1 Gbit/s) or SFP+ (10 Gbit/s) plug-in transceivers
  6 slots for 4-port Media modules 10/100/1000 Mbit/s, electrical or optical
- SCALANCE XR524-8C
  partially modular; 24 ports in total: 16 electrical ports 10/100/1000 Mbit/s and 8 combo ports 10/100/1000 Mbit/s (optical per SFP plug-in transceiver or electric);
  built-in power unit (variants: 230 V AC, 230 V AC redundant or 24 V DC redundant)

The PS598 24 V DC power supply which is also optimized for the 19" control cabinet and provided with a wide-range input (85 to 264 V AC) can be used for single or redundant configuration. It can be mounted either directly on the rear of the SCALANCE XR-500 or connected via cables.

Design

Summary of interfaces

	Type and quantity of ports							
	10 Gigabit Ethernet		Gigabit Ethernet			Fast Ethernet		Max. distance
	10000 Mbit/s		10 / 100 / 1000 Mbit/s	1000 Mbit/s		100 Mbit/s		
	Optical		Electrical	Optical		Optical		
Type of module	Multimode	Singlemode	Twisted Pair	Multimode	Singlemode	Multimode	Singlemode	
Media modules								
MM992-4CUC			4x RJ45[1]					100 m
MM992-4CU			4x RJ45					100 m
MM992-4PoEC			4x RJ45[1]					100 km
MM992-4PoE			4x RJ45					100 km
MM991-4						4x BFOC		5 km
MM991-4LD							4x BFOC	26 km
MM992-4				4x SC				5 km
MM992-4LD					4x SC			10 km
MM992-4SFP				4x LC[2]	4x LC[2]	4x LC[2]	4x LC[2]	
SFP-Module								
SFP991-1[3]						1x LC		5 km
SFP991-1LD[3]							1x LC	26 km
SFP991-1LH+[3]							1x LC	70 km
SFP991-1ELH200[3]							1x LC	200 km
SFP992-1[3] [4]				1x LC				750 m
SFP992-1LD[3] [4]					1x LC			10 km
SFP992-1LH[3] [4]					1x LC			40 km
SFP992-1LH+[3] [4]					1x LC			70 km
SFP992-1ELH[3] [4]					1x LC			120 km
SFPplus-Module[4]								
SFP993-1	1x LC							300 m
SFP993-1LD		1x LC						10 km
SFP993-1LH		1x LC						40 km

G_IK10_XX_10293

[1] With retaining collars
[2] The MM992-4SFP SFP slot module can accommodate up to four 1-port SFP modules
[3] Can only be plugged into an MM992-4SFP slot module
[4] Puggable in XR-500 SFPplus slots only

When configuring the network, it is necessary to observe the following boundary conditions:

- Maximum line length between two modules for multi-mode fiber-optic conductors
  - 5 km at 100 Mbit/s
  - 750 m at 1 Gbit/s
  - 300 m at 10 Gbit/s
- Maximum line length between two modules for single-mode fiber-optic conductors
  - 26 to 200 km at 100 Mbit/s
  - 10 to 120 km at 1 Gbit/s
  - 10 to 40 km at 10 Gbit/s
- Maximum cable length of the TP cable between two SCALANCE X switches
  - Max. 100 m with IE FC Cable 2 × 2 and IE FC RJ45 Plug 180
  - Max. 100 m at 1 Gbit/s with IE FC Standard Cable 4 × 2 (90 m), IE FC RJ45 Modular Outlet and patch cable (10 m)
  - Max. 10 m using patches with TP cord

Design (continued)

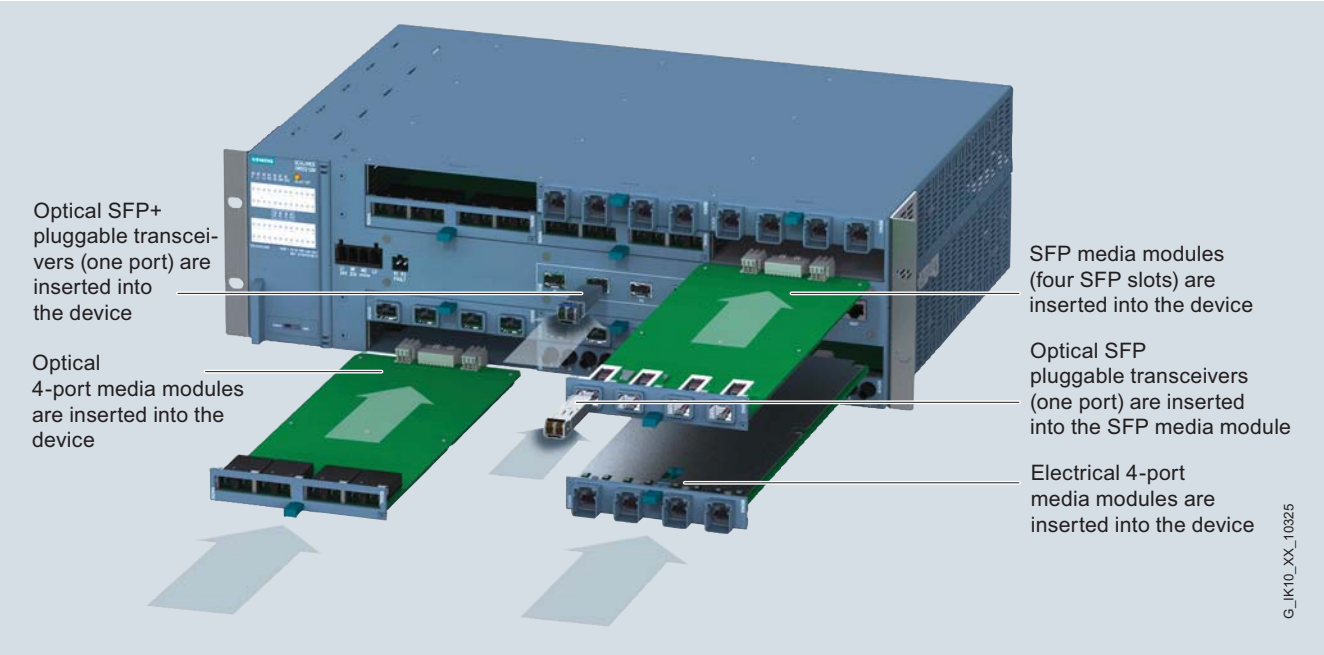

4-port Media modules plugged into Media module slot and SFP/SFP+ plug-in transceivers in SFP+ slots

Media modules for SCALANCE XR-500

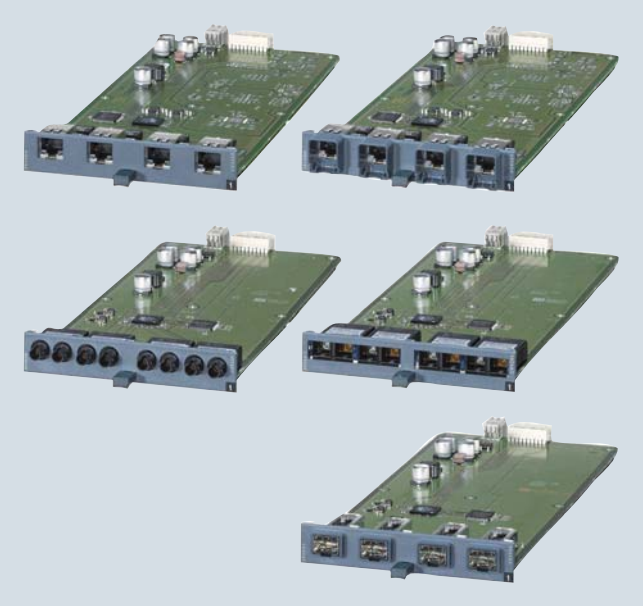

Media modules for modular SCALANCE XR-500 managed

The following types of Media module are available for the SCALANCE XR-500 switches:

- Electrical Media modules with 4 × 10/100/1000 Mbit/s RJ45 ports
  - MM992-4CUC with retaining collar
  - MM992-4CU without retaining collar
- Electrical Media modules with 4 × 10/100/1000 Mbit/s RJ45 ports and PoE
  - MM992-4PoEC with retaining collar
  - MM992-4PoE without retaining collar
- Optical Media modules with 4 × 100 Mbit/s BFOC ports
  - MM991-4, multi-mode, glass, up to 5 km
  - MM991-4LD, single-mode, glass, up to 26 km
- Optical Media modules with 4 × 1000 Mbit/s SC ports
  - MM992-4, multi-mode, glass, up to 750 m
  - MM992-4LD, single-mode, glass, up to 10 km
- Optical Media modules with 4 × 100/1000 Mbit/s for SFP plug-in transceiver
  - MM992-4SFP, for SFP plug-in transceivers with 1 × 100 Mbit/s or 1 × 1000 Mbit/s multi-mode or single-mode, glass

Design (continued)

Plug-in transceivers for SCALANCE XR-500

SFP product versions

The SFP plug-in transceivers (**S**mall **F**orm-factor **P**luggable) can be used together with the SFP Media module MM992-4SFP, and in the integral SFP+ slots of the SCALANCE XR-500.

- Optical SFP plug-in transceivers with 1 × 100 Mbit/s LC port
  - SFP991-1; multi-mode, glass, up to 5 km
  - SFP991-1LD; single-mode, glass, up to 26 km
  - SFP991-1LH+; single-mode, glass, up to 70 km
  - SFP991-1ELH200; single-mode, glass, up to 200 km
- Optical SFP plug-in transceivers with 1 × 1 Gbit/s LC port
  - SFP992-1; multi-mode, glass, up to 750 m
  - SFP992-1LD; single-mode, glass, up to 10 km
  - SFP992-1LH; single-mode, glass, up to 40 km
  - SFP992-1LH+; single-mode, glass, up to 70 km
  - SFP992-1ELH; single-mode, glass, up to 120 km

SFP+ product versions

The SFP+ plug-in transceivers (**S**mall **F**orm-factor **P**luggable plus) can only be used in the integral SFP+ slots of the SCALANCE XR-500.

- Optical SFP+ plug-in transceivers with 1 × 10 Gbit/s LC port
  - SFP993-1; multi-mode, glass, up to 300 m
  - SFP993-1LD; single-mode, glass, up to 10 km
  - SFP993-1LH; single-mode, glass, up to 40 km

The preassembled electric IE Connecting Cable SFP+/SFP+ with SFP+ connectors at both ends permits low-cost connection of SCALANCE XR-500 switches over short distances at 10 Gbit/s. It is available in lengths of 1, 2 and 7 m.

Ordering data

	Article No.
SCALANCE XR-500 Industrial Ethernet Switches	
SCALANCE XR552-12M 4 × integral 1/10 Gbit/s SFP+ slots for SFP or SFP+ plug-in transceivers 12 × 10/100/1000 Mbit/s slots for 4-port Media modules, electrical or optical	
• Layer 2, upgrade to Layer 3 possible	
- Ports at front	**6GK5552-0AA00-2AR2**
- Ports at rear	**6GK5552-0AA00-2HR2**
• Layer 3	
- Ports at front	**6GK5552-0AR00-2AR2**
- Ports at rear	**6GK5552-0AR00-2HR2**
SCALANCE XR528-6M 4 × integral 1/10 Gbit/s SFP+ slots for SFP or SFP+ plug-in transceivers 6 × 10/100/1000 Mbit/s slots for 4-port Media modules, electrical or optical	
• Layer 2, upgrade to Layer 3 possible	
- Ports at front	**6GK5528-0AA00-2AR2**
- Ports at rear	**6GK5528-0AA00-2HR2**
• Layer 3	
- Ports at front	**6GK5528-0AR00-2AR2**
- Ports at rear	**6GK5528-0AR00-2HR2**
SCALANCE XR524-8C 24 × 10/100/1000 Mbit/s, of which 8 × RJ45/SFP combo ports; maximum 24 × 1000 Mbit/s usable	
• Layer 2, upgrade to Layer 3 possible	
- Power supply 24 V DC redundant	**6GK5524-8GS00-2AR2**
- Power supply 230 V AC	**6GK5524-8GS00-3AR2**
- Power supply 230 V AC redundant	**6GK5524-8GS00-4AR2**
• Layer 3	
- Power supply 24 V DC redundant	**6GK5524-8GR00-2AR2**
- Power supply 230 V AC	**6GK5524-8GR00-3AR2**
- Power supply 230 V AC redundant	**6GK5524-8GR00-4AR2**

	Article No.
Media modules	
Electrical Media modules	
• with 4 × 10/100/1000 Mbit/s RJ45 ports, electrical	
- MM992-4CuC	**6GK5992-4GA00-8AA0**
- MM992-4CU	**6GK5992-4SA00-8AA0**
• with Power over Ethernet	
- MM992-4PoEC	**6GK5992-4RA00-8AA0**
- MM992-4PoE	**6GK5992-4QA00-8AA0**
Optical Media modules	
• with 4 × 100 Mbit/s BFOC ports, optical	
- MM991-4; multi-mode, glass, up to 5 km	**6GK5991-4AB00-8AA0**
- MM991-4LD; single-mode, glass, up to 26 km	**6GK5991-4AC00-8AA0**
• with 4 × 1000 Mbit/s SC ports, optical	
- MM992-4; multi-mode, glass, up to 750 m	**6GK5992-4AL00-8AA0**
- MM992-4LD; single-mode, glass, up to 10 km	**6GK5992-4AM00-8AA0**
• with 4 × 100/1000 Mbit/s for SFP plug-in transceiver, optical	
- MM992-4SFP; for SFP plug-in transceiver with 1 × 100 or 1 × 1000 Mbit/s multi-mode or single-mode, glass	**6GK5992-4AS00-8AA0**

Ordering data

	Article No.
Plug-in transceiver	
SFP plug-in transceiver	
• with 1 × 100 Mbit/s LC port, optical	
- SFP991-1; multi-mode, glass, up to 5 km	**6GK5991-1AD00-8AA0**
- SFP991-1LD; single-mode, glass, up to 26 km	**6GK5991-1AF00-8AA0**
- SFP991-1LH+; single-mode, glass, up to 70 km	**6GK5991-1AE00-8AA0**
- SFP991-1ELH200; single-mode, glass, up to 200 km	**6GK5991-1AE30-8AA0**
• with 1 × 1 Gbit/s LC port, optical	
- SFP992-1; multi-mode, glass, up to 750 m	**6GK5992-1AL00-8AA0**
- SFP992-1LD; single-mode, glass, up to 10 km	**6GK5992-1AM00-8AA0**
- SFP992-1LH; single-mode, glass, up to 40 km	**6GK5992-1AN00-8AA0**
- SFP992-1LH+; single-mode, glass, up to 70 km	**6GK5992-1AP00-8AA0**
- SFP992-1ELH; single-mode, glass, up to 120 km	**6GK5992-1AQ00-8AA0**
SFP+ plug-in transceiver	
• with 1 × 10 Gbit/s LC port, optical	
- SFP993-1; multi-mode, glass, up to 300 m	**6GK5993-1AT00-8AA0**
- SFP993-1LD; single-mode, glass, up to 10 km	**6GK5993-1AU00-8AA0**
- SFP993-1LH; single-mode, glass, up to 40 km	**6GK5993-1AV00-8AA0**
Accessories	
PS598-1 Power Supply 24 V DC power supply designed for installation in 19" control cabinets or for direct mounting on SCALANCE X-500 Industrial Ethernet switches; degree of protection IP20; output power 300 W, input voltage range from 85 to 264 V AC, operating temperature from 0 to +60 °C	**6GK5598-1AA00-3AA0**
Non-heating apparatus cable	
• Grounded Continental European plug, Region: D/F/NL/ESP/B/A/S/FIN	**6ES7900-0AA00-0XA0**
• Grounded British plug; Region: UK	**6ES7900-0BA00-0XA0**
• Grounded Swiss plug; Region: Switzerland	**6ES7900-0CA00-0XA0**
• Grounded North American and Japanese plug; Region: USA	**6ES7900-0DA00-0XA0**
• Grounded Italian plug; Region: Italy	**6ES7900-0EA00-0XA0**
• Grounded Chinese plug; Region: China	**6ES7900-0FA00-0XA0**
FAN597-1 Replacement fan slide-in unit for SCALANCE XR552-12M	**6GK5597-1AA00-8AA0**
FAN597-2 Replacement fan slide-in unit for SCALANCE XR528-6M	**6GK5597-2AA00-8AA0**
KEY-PLUG X-500 Swap medium for expansion of the device functions with IP routing (Layer 3), for integration of configuration data and for easy replacement of SCALANCE X-500 in the event of a fault	**6GK5905-0PA00**

	Article No.
IE connecting cable SFP+/SFP+, electrical, 10 Gbit/s Twinax copper cables	
Length:	
• 1 m	**6GK5980-3CB00-0AA1**
• 2 m	**6GK5980-3CB00-0AA2**
• 7 m	**6GK5980-3CB00-0AA7**
IE FC RJ45 Modular Outlet FastConnect RJ45 Outlet for Industrial Ethernet with interface for insertion of a replaceable insert	
• with insert 2FE; replaceable insert for 2 × 100 Mbit/s interface	**6GK1901-1BE00-0AA1**
• with 1GE insert; replaceable insert for 1 × 1000 Mbit/s interface	**6GK1901-1BE00-0AA2**
IE FC TP Standard Cable GP 2×2 (Type A) 4-core, shielded TP installation cable for connection to IE FC outlet RJ45/IE FC RJ45 plug; PROFINET-compatible; with UL approval Sold by the meter, max. length 1 000 m; minimum order 20 m	**6XV1840-2AH10**
IE FC TP Standard Cable GP 4×2 8-core, shielded TP installation cable for connection to IE FC RJ45 modular outlet for universal application; with UL approval Sold by the meter; max. length 1 000 m, minimum order 20 m	**6XV1870-2E**
IE TP Cord RJ45/RJ45 TP cable 4×2 with two RJ45 connectors	
• 0.5 m	**6XV1870-3QE50**
• 1 m	**6XV1870-3QH10**
• 2 m	**6XV1870-3QH20**
• 6 m	**6XV1870-3QH60**
• 10 m	**6XV1870-3QN10**
IE FC RJ45 Plug 180 RJ45 plug connector for Industrial Ethernet with a robust metal enclosure and integrated insulation displacement contacts for connecting Industrial Ethernet FC installation cables; with 180° cable outlet; for network components and CPs/CPUs with Industrial Ethernet interface	
• 1 pack = 1 unit	**6GK1901-1BB10-2AA0**
• 1 pack = 10 units	**6GK1901-1BB10-2AB0**
• 1 pack = 50 units	**6GK1901-1BB10-2AE0**
IE FC RJ45 plug 4×2 RJ45 plug connector for Industrial Ethernet (10/100/1000 Mbit/s) with a robust metal enclosure and integrated insulation displacement contacts for connecting Industrial Ethernet FC installation cables; 180° cable outlet; for network components and CPs/CPUs with Industrial Ethernet interface	
• 1 pack = 1 unit	**6GK1901-1BB11-2AA0**
• 1 pack = 10 units	**6GK1901-1BB11-2AB0**
• 1 pack = 50 units	**6GK1901-1BB11-2AE0**

Overview

SCALANCE X101-1 Industrial Ethernet Media converter

The SCALANCE X101 Industrial Ethernet Media converters are used for converting various transmission Media in Industrial Ethernet networks with 10/100 Mbit/s in line, star and ring topologies.

Common features of all product versions:

- Rugged metal enclosure, suitable for space-saving installation in control cabinets on a DIN rail or an S7-300 mounting rail as well as for wall mounting
- 4-pin terminal block for redundant power supply (2 x 24 V DC)
- LED diagnostics on the device (power, link status, data communication)
- Error signaling contact with easy adjustment using the SET button
- Electrical RJ45 socket with collar for strain relief

Product versions

	Electrical interface	Optical interface
SCALANCE X101-1	Twisted-pair interface, 10/100BaseTX port type (10/100 Mbit/s, RJ45 socket), for connecting IE FC cables via IE FC RJ45 plugs over distances up to 100 m	100BaseFX port type (100 Mbit/s with BFOC connection technology), for connection to multimode glass fiber-optic cables up to 3 km
SCALANCE X101-1LD		100BaseFX port type (100 Mbit/s with BFOC connection technology), for connection to single mode glass fiber-optic cables up to 26 km

Note:

For detailed information and further product variants, see Catalog IK PI, section "PROFINET/Industrial Ethernet, Industrial Ethernet Switches / Media Converters".

Ordering data

	Article No.
SCALANCE X101-1 Industrial Ethernet Media Converter For conversion from RJ45 TP to multimode fiber optic cable (BFOC) with 100 Mbit/s; 1 × 10/100 Mbit/s RJ45 port and 1 × 100 Mbit/s multimode BFOC; redundant 24 V DC supply and signal contact	**6GK5101-1BB00-2AA3**
SCALANCE X101-1LD Industrial Ethernet Media Converter For conversion from RJ45 TP to single mode fiber optic cable (BFOC) with 100 Mbit/s; 1 × 10/100 Mbit/s RJ45 port and 1 × 100 Mbit/s single mode BFOC; redundant 24 V DC supply and signal contact	**6GK5101-1BC00-2AA3**

Overview

Industrial Ethernet FastConnect (IE FC) is a fast assembly system with insulation displacement for easy assembly and wiring of 4-core and 8-core IE FC cables. Using the FC Stripping Tool it is possible to remove the outer casing and the woven shield of the IE FC cable accurately in a single step. The cable prepared in this manner is subsequently assembled on the contacts of the connection element.

Application

Linking elements

The Linking elements which can be used depend on whether the transmission rate is 10/100 Mbit/s or 1 000 Mbit/s:

- IE FC RJ45 Plug 2×2 90/180 (10/100 Mbit/s) in association with 4-core (2×2) IE FC cables
- IE FC RJ45 Plug 4×2 180 (10/100/1000 Mbit/s) in association with 8-core (4×2) IE FC cables
- IE FC Outlet RJ45 (10/100 Mbit/s) in association with 4-core (2x2) IE FC cables
- IE FC RJ45 Modular Outlet (10/100/1000 Mbit/s) with 8-core (4x2) IE FC cables

The following table provides an overview of the electric port types of the switches, the transmission rates they support, and the IE FC TP standard cables and IE FC linking elements which can be used. In addition to the IE FC TP standard cables, Catalog IK PI offers further IE FC TP cables with special properties.

Transmission rate	**10/100 Mbit/s**		**1 000 Mbit/s**	
Port type	10/100BaseTX		1000BaseTX	
Max. cable length	100 m	90 m (+ total of 10 m for TP Cord Patch cables)	90 m	90 m (+ total of 10 m for TP Cord Patch cables)
Cable type	IE FC TP Standard Cable 2×2	IE FC TP Standard Cable 4×2	IE FC TP Standard Cable 4×2 (AWG 24)	IE FC TP Standard Cable 4×2 (AWG 22)
Linking elements	IE FC RJ45 Plug 2×2 90/180, alternative: IE FC Outlet RJ45 + TP Cord	IE FC RJ45 Modular Outlet with insert 2FE + TP Cord	IE FC RJ45 Plug 4×2 180	IE FC RJ45 Modular Outlet with insert 1GE + TP Cord

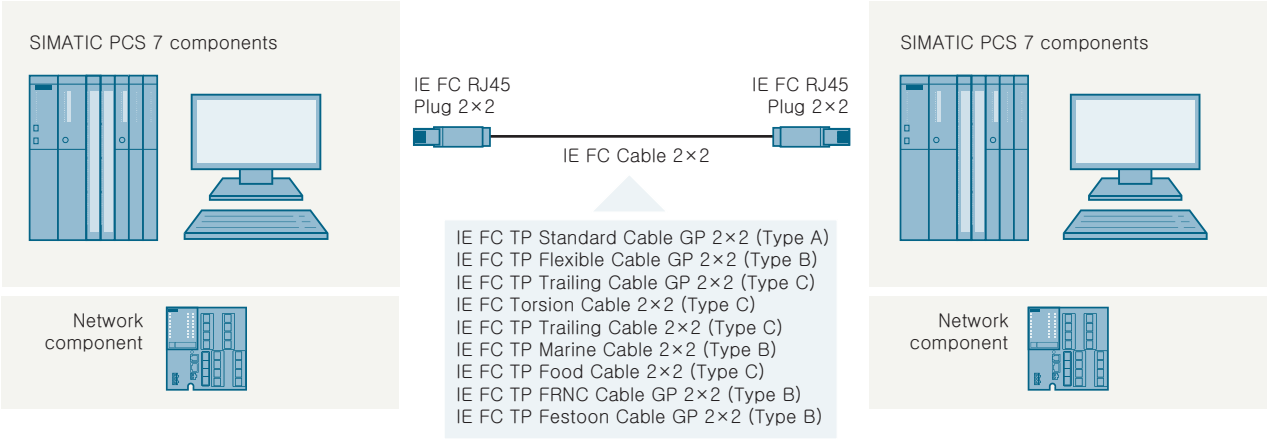

If components that do not support autocrossing are used,
an IE TP XP cord must be used between two network components or terminals.

G_PCS7_XX_00233

Use of FastConnect cables 2×2 with IE FC RJ45 Plug 2×2

IE FC RJ45 Plug 2×2

The IE FC RJ45 Plugs 2×2 suitable for simple and fast on-site assembly of 4-core (2×2) twisted pair (TP) FastConnect installation cables are the ideal solution for Industrial Ethernet communication connections for transmission rates up to 100 Mbit/s. They can be used to implement point-to-point connections without patch technology between two terminal units/network components at distances up to 100 m. Since the IE FC RJ45 Plugs 2×2 have no parts which can be lost, assembly is also possible under difficult conditions. For alternatives to the IE FC TP Standard Cable according to the configuration graphics, see Catalog IK PI, section "Industrial Ethernet", subsection "Cabling systems".

Application (continued)

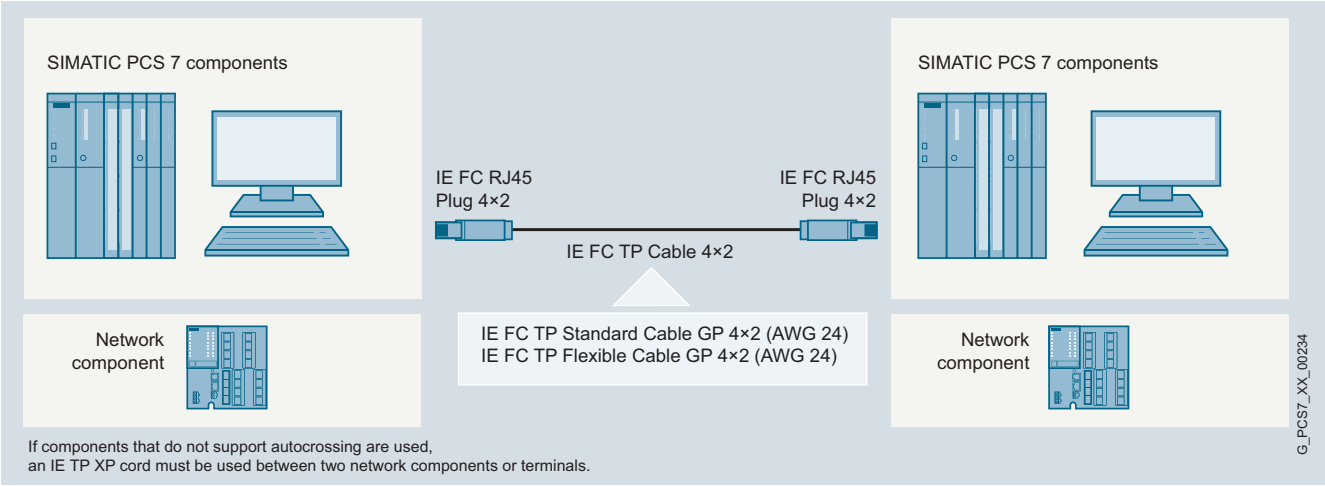

Use of FastConnect cables 4×2 with IE FC RJ45 Plug 4×2

IE FC RJ45 Plug 4×2

The IE FC RJ45 Plugs 4×2 with 180° (straight) outgoing cable are exceptionally suitable for simple and fast on-site assembly of 8-core (4×2) twisted pair (TP) FastConnect installation cables (AWG 24) on network components or terminal equipment. When using the IE FC TP Standard Cable, uncrossed 10/100/1000 Mbit/s Ethernet connections can thus be made at distances up to 90 m without patch technology. Crossed cables can also be implemented by swapping the transmit and receive pairs in a plug. As an alternative to the IE FC TP Standard Cable according to the configuration graphics, an IE FC Flexible Cable is also available for distances up to 60 m (for details see Catalog IK PI, section "Industrial Ethernet", subsection "Cabling systems").

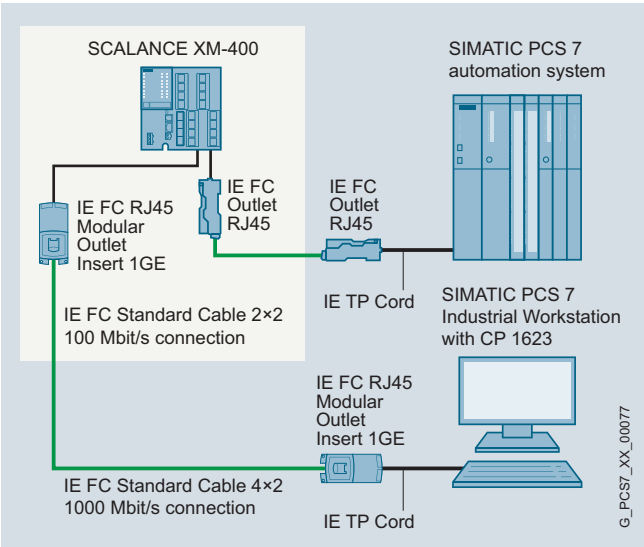

Configuration example with IE FC RJ45 Modular Outlet and IE FC Outlet RJ45

IE FC Outlet RJ45 and IE FC RJ45 Modular Outlet

Alternatives for conversion from RJ45 to the insulation displacement system:

- IE FC Outlet RJ45 for 4-core TP (2×2) IE FC cables and transmission rates up to 100 Mbit/s
- IE FC RJ45 Modular Outlet for 8-core TP (4×2) IE FC cables and transmission rates up to 1 000 Mbit/s.

The latter has the advantage that the existing wiring can still be used if the communication is converted from 100 Mbit/s to 1 000 Mbit/s. It is only necessary to replace the 2FE insert by one of type 1GE. In contrast to the plugs, an RJ45 patch cable (TP Cord) is additionally required for each outlet which connects this to the network components or data terminal.

Detailed information on the FastConnect Outlets and the available TP cords can be found in Catalog IK PI and in the Industry Mall or in CA 01 under "Industrial Communication".

Further information on network structures is provided in the manual for TP and fiber-optic networks.

Design

IE FC RJ45 Plugs 4×2 and 2×2

IE FC RJ45 Plug 2×2 with 90° outgoing cable (left) and with 180° outgoing cable (right)

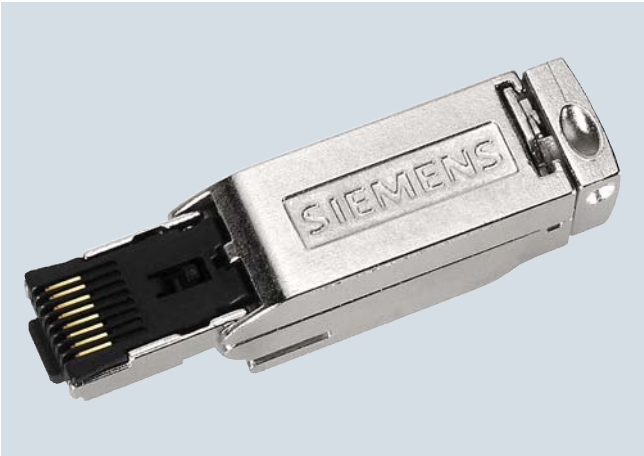

IE FC RJ45 Plug 4×2 with 180° outgoing cable

In contrast to the IE FC RJ45 Plug 4×2 which is only offered with a 180° (straight) outgoing cable, the IE FC RJ45 Plug 2×2 is also available with a 90° (angled) outgoing cable.

All IE FC RJ45 Plugs have a rugged, industry-compatible metal housing with integral strain relief that provides optimum protection for the data communication against EMC interferences. The integral insulation displacement contacts permit simple, fault-free contacting of the various types of FC cable. Following introduction of the stripped ends of the cables into the tipped-up barrel contacts, the latter are pressed down for secure contacting of the conductors.

With the housing open, colored marks on the contact cover identify correct connection of the cable cores. The transparent plastic material of the contact element allows visual inspection of the contacts.

Owing to their compact size, IE FC RJ45 Plugs can be used both on devices with individual jacks and on devices with multiple jacks (blocks).

Matching retaining collars on terminal equipment, e.g. on devices from the SCALANCE X and SCALANCE S families, permits additional protection of the plug connection against tension and bending stresses.

IE FC RJ modular outlet with insert 1GE

IE FC RJ45 Modular Outlet

The IE FC RJ45 Modular Outlet (Base Module) designed for transmission rates up to 1 000 Mbit/s consists of a rugged metal housing with IP40 degree of protection which is suitable for both DIN rail and wall mounting. It has 8 barrel contacts for connecting 8-core Industrial Ethernet FC installation cables (AWG 22) and an interface for the replaceable insert, for example:

- IE FC RJ45 Modular Outlet Insert 2FE with 2 × RJ45 sockets for 100 Mbit/s
- IE FC RJ45 Modular Outlet Insert 1GE with 1 × RJ45 socket for 1 000 Mbit/s
- IE FC RJ45 Modular Outlet Power Insert with 1 × RJ45 socket for 100 Mbit/s and 1 × 24 V DC connection (for details on use and ordering, see Section "Industrial Wireless LAN", from page 10/51)

Ordering data

	Article No.
Industrial Ethernet FC Standard Cable GP 2×2 For universal use, for connection to IE FC Outlet RJ45 or IE FC RJ45, 4-core (2×2), shielded	
• Cut-to-length; max. delivery length 1 000 m, minimum ordering length 20 m	**6XV1840-2AH10**
• Preferred length 1 000 m	**6XV1840-2AU10**
Industrial Ethernet FC Standard Cable GP 4×2 8-core, shielded TP installation cable for universal applications; with UL approval; sold by the meter; max. length 1000 m, minimum order 20 m	
• AWG 22, for connection to IE FC RJ45 Modular Outlet	**6XV1870-2E**
• AWG 24, for connection to IE FC RJ45 Plug 4×2	**6XV1878-2A**
Industrial Ethernet FC TP Robust Standard Cable GP 2×2 (PROFINET Type A) TPE outer sheath, fixed installation, for connection to IE FC RJ45 or IE FC Outlet RJ45, for universal use, 4-core, shielded, Cat. 5e Sold by the meter, max. length 2 000 m; minimum order 20 m	**6XV1841-2A**
Industrial Ethernet FC TP Robust Standard Cable GP 2×2 (PROFINET Type B) TPE outer sheath, fixed installation, for connection to IE FC RJ45 or IE FC Outlet RJ45, for universal use, 4-core, shielded, Cat. 5e Sold by the meter, max. length 2 000 m; minimum order 20 m	**6XV1841-2B**
Industrial Ethernet FC Stripping Tool Preadjusted stripping tool for fast stripping of Industrial Ethernet FC cables	**6GK1901-1GA00**
Industrial Ethernet FC Blade Cassettes Replacement blade cassette for the Industrial Ethernet stripping tool, 5 units; for use with IE FC RJ45 Plugs and Modular Outlet	**6GK1901-1GB00**

	Article No.
IE FC RJ45 Plug 2×2 180 RJ45 plug connector for Industrial Ethernet with a rugged metal housing and integrated insulation displacement contacts for connecting Industrial Ethernet FC installation cables; with 180° cable outlet; for network components and CPs/CPUs with Industrial Ethernet interface	
• 1 pack = 1 unit	**6GK1901-1BB10-2AA0**
• 1 pack = 10 units	**6GK1901-1BB10-2AB0**
• 1 pack = 50 units	**6GK1901-1BB10-2AE0**
Industrial Ethernet FC RJ45 Plug 2×2 90 RJ45 plug connector for Industrial Ethernet with a rugged metal housing and integrated insulation displacement contacts for connecting Industrial Ethernet FC installation cables; with 90° cable outlet	
• 1 pack = 1 unit	**6GK1901-1BB20-2AA0**
• 1 pack = 10 units	**6GK1901-1BB20-2AB0**
• 1 pack = 50 units	**6GK1901-1BB20-2AE0**
Industrial Ethernet FC RJ45 Plug 4×2 180 RJ45 plug connector for Industrial Ethernet (10/100/1000 Mbit/s) with a rugged metal enclosure and integrated insulation displacement contacts for connecting Industrial Ethernet FC installation cables; 180° cable outlet; for network components and CPs/CPUs with Industrial Ethernet interface	
• 1 pack = 1 unit	**6GK1901-1BB11-2AA0**
• 1 pack = 10 units	**6GK1901-1BB11-2AB0**
• 1 pack = 50 units	**6GK1901-1BB11-2AE0**
Industrial Ethernet FC Outlet RJ45	**6GK1901-1FC00-0AA0**
IE FC RJ45 Modular Outlet with Insert 1GE FastConnect RJ45 Outlet for Industrial Ethernet with a replaceable insert for 1 × 1 000 Mbit/s interface	**6GK1901-1BE00-0AA2**
IE FC RJ45 Modular Outlet with Insert 2FE FastConnect RJ45 Outlet for Industrial Ethernet with a replaceable insert for 2 × 100 Mbit/s interface For further IE FC RJ45 Modular Outlet versions and replaceable inserts, see Catalog IK PI	**6GK1901-1BE00-0AA1**

Overview

Electrical transmission Media

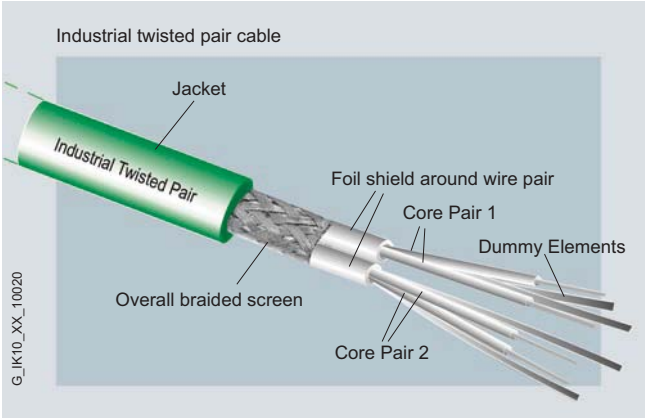

Terminals can be connected through industrial twisted pairs (ITPs). The preassembled ITP standard cable with Sub-D connectors is available for connection between stations and network components. Line lengths of up to 100 m can be achieved while saving on patch technology.

The ITP standard cable 9/15 is equipped with a 9-pin and a 15-pin connector. The cable is used for direct connection of terminals with ITP interface to Industrial Ethernet components with ITP interface.

The ITP XP standard cable 9/9 is equipped with two 9-pin connectors. This cable is crossed for direct connection of two Industrial Ethernet network components with ITP interface.

The ITP XP standard cable 15/15 is equipped with two 15-pin connectors. This cable is crossed for direct connection of two terminals with ITP interface.

The Industrial Ethernet ITP connectors have Sub-D connectors made of metal and are available in two versions:

- 9-pin plug with straight cable outlet
- 15-pin plug with variable cable outlet, for connection to terminals with ITP interface

Alternatively, the terminals can also be connected to twisted pair (TP cord) cables. Detailed information on the TP cords can be found in Catalog IK PI, in the Industry Mall, or in Catalog CA 01 under "Industrial Communication".

Ordering data

	Article No.
ITP Standard Cable for Industrial Ethernet Not preassembled, cut-to-length	
2 x 2-core, without connectors For connection of a terminal; for self-assembly of connectors or for the connection between patch panel and socket	**6XV1850-0AH10**
ITP Standard Cable 9/15 ITP installation cable for direct connection of terminals with ITP interface to Industrial Ethernet network components with ITP interface; with a 9-pin and a 15-pin Sub-D plug	
• 2 m	**6XV1850-0BH20**
• 5 m	**6XV1850-0BH50**
• 8 m	**6XV1850-0BH80**
• 12 m	**6XV1850-0BN12**
• 15 m	**6XV1850-0BN15**
• 20 m	**6XV1850-0BN20**
• 30 m	**6XV1850-0BN30**
• 40 m	**6XV1850-0BN40**
• 50 m	**6XV1850-0BN50**
• 60 m	**6XV1850-0BN60**
• 70 m	**6XV1850-0BN70**
• 80 m	**6XV1850-0BN80**
• 90 m	**6XV1850-0BN88**
• 100 m	**6XV1850-0BT10**
ITP XP Standard Cable 9/9 Crossed ITP installation cable for direct connection of two Industrial Ethernet network components with ITP interface; with two 9-pin Sub-D plugs	
• 2 m	**6XV1850-0CH20**
• 5 m	**6XV1850-0CH50**
• 8 m	**6XV1850-0CH80**
• 12 m	**6XV1850-0CN12**
• 15 m	**6XV1850-0CN15**
• 20 m	**6XV1850-0CN20**
• 30 m	**6XV1850-0CN30**
• 40 m	**6XV1850-0CN40**
ITP XP Standard Cable 15/15 Crossed ITP installation cable for direct connection of two terminals with ITP interface; with two 15-pin sub-D plugs	
• 2 m	**6XV1850-0DH20**
• 6 m	**6XV1850-0DH60**
• 10 m	**6XV1850-0DN10**
ITP Connector for Industrial Ethernet	
• 9-pin	**6GK1901-0CA00-0AA0**
• 15-pin, for connection to terminals with ITP interface	**6GK1901-0CA01-0AA0**

Overview

Optical transmission Media

Glass fiber-optic cables are preferably used as the optical transmission medium. The two types of cable offered are suitable for above-ground routing indoors or outdoors. They are available in fixed lengths, pre-assembled with 2 x 2 BFOC connectors (fiber optic standard cable) or 2 x 2 SC connectors (FO standard cable).

The FO standard cable with 2 x 2 SC connectors is required for optical networking in the Gigabit range.

Note:

You can order components supplementary to the SIMATIC NET cabling range from your local contact person. For technical advice contact:
Siemens AG
SPG Industrial Network and Components, Fürth, Germany
J. Hertlein
Tel.: +49 911 750-4465
Email: juergen.hertlein@siemens.com

Specifications, other cable lengths and other fiber-optic cables can be found in catalog IK PI.

More information on assembly is provided in the manual for TP and fiber-optic networks.

Ordering data

	Article No.
FO Standard Cable 50/125[1] Preferred lengths, pre-assembled with 2x2 SC connectors:	
• 1 m	**6XV1873-6AH10**
• 3 m	**6XV1873-6AH30**
• 5 m	**6XV1873-6AH50**
• 10 m	**6XV1873-6AN10**
• 20 m	**6XV1873-6AN20**
• 50 m	**6XV1873-6AN50**
• 100 m	**6XV1873-6AT10**
• 200 m	**6XV1873-6AT20**
• 300 m	**6XV1873-6AT30**
FIBER OPTIC CABLE standard cable 62.5/125, may be split [1] Preferred lengths, pre-assembled with 2x2 BFOC (ST) connectors:	
• 1 m	**6XV1820-5BH10**
• 3 m	**6XV1820-5BH30**
• 5 m	**6XV1820-5BH50**
• 10 m	**6XV1820-5BN10**
• 20 m	**6XV1820-5BN20**
• 50 m	**6XV1820-5BN50**
• 100 m	**6XV1820-5BT10**
• 200 m	**6XV1820-5BT20**
• 300 m	**6XV1820-5BT30**
BFOC (ST) connector set For FIBER OPTIC CABLE standard cable, 20 units	**6GK1901-0DA20-0AA0**

[1] Special tools and specially trained personnel are required for pre-assembling glass fiber-optic cables.

10

More information

Various versions of the optical connections for fiber-optic cables are available with the network components or terminal equipment:

Design of optical connection	Description	
BFOC connection = ST (stick and twist)	BFOC connectors have a bayonet lock for glass fiber-optic cables. They are suitable for monomode and multimode fibers.	
SC connection	SC connectors are standard connectors for glass fiber-optic cables. The SC connector is usually in the duplex version. However, it can also be used as a simplex connector by separating it from the isolating piece.	
SC-RJ connection	SC RJ is the smallest SC duplex plug connection.	

For more information as well as an overview of the connectors for connection of fiber-optic cables to the optical interface of network components and terminal equipment see the Industry Online Support:

https://support.industry.siemens.com/cs/ww/en/view/35146578

Design

Connection of single stations, servers and clients

SIMATIC PCS 7 subsystems for engineering, operation and monitoring (also via Internet/Intranet), batch control, route control, asset management or IT applications are distributed between various SIMATIC PCS 7 Industrial Workstations of single station, server or client design depending on the configurationverteilt. Depending on their task and the associated integration into the entire plant, these SIMATIC PCS 7 Industrial Workstations are connected either only on the plant bus, only on the terminal bus or on both buses of the Industrial Ethernet network. The connection can be redundant or non-redundant, and is made using:

- Interfaces integrated onboard
- Simple network adapters
- Special communication modules, e.g. CP 1623, CP 1613 A2, CP 1628

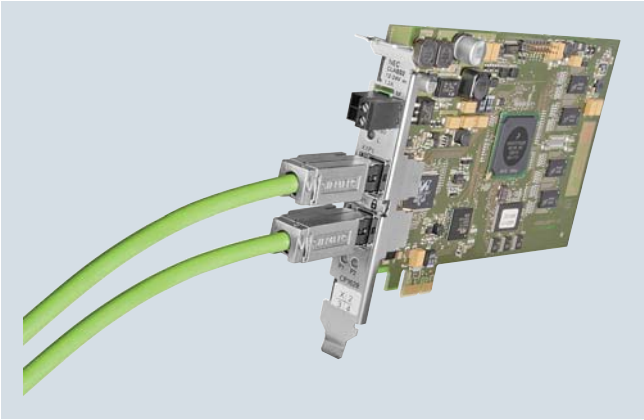

CP 1628 communication module

Connection to plant bus

A SIMATIC PCS 7 workstation, designed as single station or server, can be operated on the Industrial Ethernet plant bus per Ethernet network adapter (10/100/1000 Mbps) and BCE license or per CP 1623/CP 1613 A2/CP 1628 communication module and SIMATIC NET HARDNET-IE S7 or SIMATIC NET HARDNET-IE S7-REDCONNECT communication software.

The IE versions of the SIMATIC PCS 7 Industrial Workstation for single stations and servers are factory equipped with a CP 1623 communication module and SIMATIC NET HARDNET-IE S7 communication software, licensed for up to four CP 1623/ CP 1613 A2/CP 1628 (license for 4 units).

CP 1623 and CP 1628 both have a PCI Express port x1 as well as a 2-port switch (RJ45) for connecting to Industrial Ethernet (10/100/1000 Mbps). CP 1628 also features security functions such as Firewall, VPN. CP 1613 A2 which operates on a conventional PCI slot has only one port (ITP/RJ45) for connection to Industrial Ethernet (10/100 Mbps).

An Ethernet card (10/100/1000 Mbps) with BCE license is integrated in the BCE versions of the SIMATIC PCS 7 Industrial Workstation. A separately available desktop adapter network adapter can also be used with this BCE license in a SIMATIC PCS 7 Industrial Workstation.

If you use alternative hardware instead of the SIMATIC PCS 7 Industrial Workstation, you require an additional BCE license for each station which communicates over the plant bus via BCE (Basic Communication Ethernet).

With BCE, AS communication is possible with up to 8 automation systems, with SIMATIC NET HARDNET-IE S7 communication via CP 1623/CP 1613 A2/CP 1628 with up to 64 automation systems (only AS single stations in each case, no AS redundancy stations).

Only the SIMATIC PCS 7 workstation with CP 1623/CP 1613 A2/ CP 1628 can communicate with redundant automation systems. You require for this purpose SIMATIC NET HARDNET-IE S7-REDCONNECT (license for 4 units) communication software instead of the SIMATIC NET HARDNET-IE S7 communication software. SIMATIC NET HARDNET-IE S7-REDCONNECT PowerPack (license for 4 units) can be used to upgrade the communications software.

Single stations and servers with BCE can be retro-upgraded to CP 1613/1623/1628 communication. Depending on the criteria mentioned above, this requires SIMATIC NET HARDNET-IE S7 or SIMATIC NET HARDNET-IE S7-REDCONNECT in addition to the CP 1623, CP 1613 A2 or CP 1628 communication module.

The communication software for CP 1623, CP 1613 A2 or CP 1628 is generally supplied with the SIMATIC PCS 7 software and is installed based on the operating system.

In order to activate this communications software, you may need additional licenses for the SIMATIC NET HARDNET-IE S7, SIMATIC NET HARDNET-IE S7-REDCONNECT, or SIMATIC NET HARDNET-IE S7-REDCONNECT PowerPack communication products.

Connection to terminal bus

SIMATIC PCS 7 Industrial Workstations in client, server or single station configurations are usually connected to the terminal bus via the onboard Industrial Ethernet interfaces. In the case of servers or single stations without a connection to the plant bus, the network adapter envisaged for BCE can be used as an alternative.

The terminal bus can also be configured redundantly. A configuration with two separate rings is recommended for the redundant, high availability terminal bus. The communication is performed in this case using the Parallel Redundancy Protocol (PRP) in accordance with IEC 62439-3. Each PCS 7 station should be connected to one of two Industrial Ethernet interfaces on each of the two separate rings. Industrial Ethernet interfaces are standard in all current SIMATIC PCS 7 Industrial Workstations.

The SIMATIC NET SOFTNET-IE RNA communication software on the redundantly connected PCS 7 stations organizes communication processes based on the PRP. Therefore, SIMATIC NET SOFTNET-IE RNA communication software is required on each of the redundantly connected PCS 7 stations.

Design (continued)

Connecting non-PRP-enabled devices

Up to 2 non-PRP-enabled devices that have only one Industrial Ethernet port, such as SICLOCK TC 400, a WLAN Access Point or an infrastructure computer, such as DNS, WINS, DHCP or a file server, can be integrated into a redundant, high availability terminal bus with PRP via a SCALANCE X204RNA.

SCALANCE X204RNA is available in two product versions:

- SCALANCE X204RNA
  Router in plastic housing with 4 electrical ports for connecting up to 2 non-PRP-enabled devices to redundant networks
- SCALANCE X204RNA EEC
  Router in metal housing with 2 electric terminal device ports and 2 optical/electrical combo ports for network connection of up to 2 non-PRP-enabled terminal devices to redundant networks

The following constraints must be observed:

- Length of the TP cable between the network and SCALANCE X-200RNA:
  - Max. 100 m with IE FC cable and IE FC RJ45 Plug 180
  - Max. 10 m using patches with TP cord
- Length of the optical cables between the network and SCALANCE X-200RNA
  - Max. 5 000 m with Industrial Ethernet glass fiber-optic cables (multi-mode)
  - Max. 26 000 m with Industrial Ethernet glass fiber-optic cables (singlemode)

SCALANCE X-200RNA is typically installed with the stations to be connected in a control cabinet.

For more information and technical specifications for the SCALANCE X204RNA, see Catalog IK PI.

Connection of automation systems

The SIMATIC PCS 7 automation systems communicate with other subsystems of the process control system (e.g. operator system or engineering system) via the Industrial Ethernet plant bus. The automation systems are connected to the plant bus using the CP 443-1 communications processor, also redundant in the case of high availability systems. Instead of the CP 443-1, the CP 443-1 Advanced with integrated security function (firewall and VPN) can also be used.

With the AS 410 modular automation systems, an additional layer is applied to the PCB of CPU 410-5H Process Automation (conformal coating). To match the AS 410, a CP 443-1 in the conformal coating version is therefore preferred (component of the AS bundle configuration).

Ordering data

	Article No.
System connection of single stations, servers and clients	
Desktop adapter network card for BCE and as spare part for redundant terminal bus	
Intel network adapter for connection to Industrial Ethernet (10/100/1000 Mbps), with RJ45 connection	
• With conventional PCI interface	**A5E00718412**
• With PCI Express interface	**A5E01579552**
CP 1613 A2 PCI card with one port (ITP or RJ45) for connecting to Industrial Ethernet (10/100 Mbps)	**6GK1161-3AA01**
CP 1623 PCI Express x1 card for connection to Industrial Ethernet (10/100/1000 Mbps), with 2-port switch (RJ45)	**6GK1162-3AA00**
CP 1628 PCI Express x1 card for connecting to Industrial Ethernet (10/100/1000 Mbps), with 2-port switch (RJ45) and integrated security functions (firewall, VPN)	**6GK1162-8AA00**

	Article No.
Licenses required in some cases for activating the functionality of the CP 1623, CP 1613 A2 or CP 1628 (communication software is part of the SIMATIC PCS 7 software)	
Activation license if no redundant AS are used	
SIMATIC NET HARDNET-IE S7 V13 S7 communication software with license for up to 4 Industrial Ethernet CPs	
Runtime software, 2 languages (English, German), software class A, runs with Windows 7 Ultimate 32/64-bit, Windows Server 2008 R2 Standard 64-bit, or Windows Server 2012 R2 Standard 64-bit, single license for 1 installation	
No SIMATIC PCS 7 Software Media Package	
• Physical delivery Software and electronic manual on CD, license key on USB flash drive	**6GK1716-1CB13-0AA0**
• Online delivery Software and license key download Note: Email address required!	**6GK1716-1CB13-0AK0**

Ordering data

	Article No.
Activation licenses when using redundant AS	
• Alternative license for SIMATIC NET HARDNET-IE S7:	
SIMATIC NET HARDNET-IE S7-REDCONNECT V13 S7 communication software for fail-safe S7 communication over redundant networks with license for up to 4 Industrial Ethernet CPs	
Runtime software, 2 languages (English, German), software class A, runs with Windows 7 Ultimate 32/64-bit, Windows Server 2008 R2 Standard 64-bit, or Windows Server 2012 R2 Standard 64-bit, single license for 1 installation	
No SIMATIC PCS 7 Software Media Package	
• Physical delivery Software and electronic manual on CD, license key on USB flash drive	**6GK1716-0HB13-0AA0**
• Online delivery Software and license key download Note: Email address required!	**6GK1716-0HB13-0AK0**
• Additive license for SIMATIC NET HARDNET-IE S7	
SIMATIC NET HARDNET-IE S7-REDCONNECT PowerPack V13 For expansion of HARDNET-IE S7 communication software to HARDNET-IE S7-REDCONNECT, with license for up to 4 Industrial Ethernet CPs	
Runtime software, 2 languages (English, German), software class A, runs with Windows 7 Ultimate 32/64-bit, Windows Server 2008 R2 Standard 64-bit, or Windows Server 2012 R2 Standard 64-bit, single license for 1 installation	
No SIMATIC PCS 7 Software Media Package	
• Physical delivery Software and electronic manual on CD, license key on USB flash drive	**6GK1716-0HB13-0AC0**
• Online delivery Software and license key download Note: Email address required!	**6GK1716-0HB13-0AK1**

	Article No.
System connection for plant bus communication via standard network adapter and Basic Communication Ethernet for single stations and servers which are not based on a SIMATIC PCS 7 Industrial Workstation	
SIMATIC PCS 7 BCE V8.2 Runtime license for plant bus communication via standard network adapter and Basic Communication Ethernet; already integrated with SIMATIC PCS 7 Industrial Workstations	
3 languages (English, German, French), software class A, runs with Windows 7 Ultimate 32/64-bit, Windows 10 Enterprise 2015 LTSB 64-bit, Windows Server 2008 R2 Standard 64-bit or Windows Server 2012 R2 Standard 64-bit, floating license for 1 user	
No SIMATIC PCS 7 Software Media Package	
• Physical delivery License key on USB flash drive, certificate of license	**6ES7650-1CD28-2YB5**
• Online delivery License key download, online certificate of license Note: E-mail address required!	**6ES7650-1CD28-2YH5**
Components for connecting SIMATIC PCS 7 stations to a redundant terminal bus with PRP	
SIMATIC NET SOFTNET-IE RNA V13 Software for linking of PCS 7 stations to PRP-enabled networks with integrated SNMP	**6GK1711-1EW13-0AA0**
Runtime software, 2 languages (English, German), software class A, runs with Windows 7 Ultimate 32/64-bit, Windows Server 2008 R2 Standard 64-bit or Windows Server 2012 R2 Standard 64-bit, single license for 1 installation	
No SIMATIC PCS 7 Software Media Package	
Physical delivery Software and electronic manual on CD, license key on USB flash drive	
Industrial Ethernet SCALANCE X204RNA router With integrated SNMP access, Web diagnostics and PROFINET diagnostics, for connecting to non-PRP-enabled terminal devices on PRP networks, with operating instructions, Industrial Ethernet network manual and configuration software on CD	
• SCALANCE X204RNA with four 100 Mbps RJ45 ports	**6GK5204-0BA00-2KB2**
• SCALANCE X204RNA EEC with two 100 Mbps RJ45 ports and two RJ45/SFP combo ports	**6GK5204-0BS00-3LA3**

Ordering data

	Article No.
Accessories for Industrial Ethernet SCALANCE X-204RNA routers	
IE FC TP Standard Cable GP 2×2 (type A) 4-wire, shielded TP installation cable for connecting to IE FC RJ45 outlet / IE FC RJ45 plug; PROFINET-compatible; with UL approval; sold by the meter; max. quantity 1000 m, minimum order 20 m	**6XV1840-2AH10**
IE FC RJ45 Plug 180 2×2 RJ45 plug connector for Industrial Ethernet with a sturdy metal enclosure and integrated insulation displacement contacts for connecting Industrial Ethernet FC installation cables; with 180° cable outlet; for network components and CPs/CPUs with Industrial Ethernet interface	
• 1 pack = 1 unit	**6GK1901-1BB10-2AA0**
• 1 pack = 10 units	**6GK1901-1BB10-2AB0**
• 1 pack = 50 units	**6GK1901-1BB10-2AE0**
SFP plug-in transceiver	
• SFP991-1 (multi-mode, glass, up to 3 km)	**6GK5991-1AD00-8AA0**
• SFP991-1LH+ (singlemode, glass, up to 70 km, LH+)	**6GK5991-1AE00-8AA0**
• SFP991-1LD (singlemode, glass, up to 26 km)	**6GK5991-1AF00-8AA0**
LC Plug MM[2]	**6GK1901-0RB10-2AB0**
LC Plug SM[2]	**6GK1901-0SB10-2AB0**
FO Robust Cable GP 50/125/900[1]	**6XV1873-2R**
FO Robust Cable GP 4x9/125/900[1]	**6XV1843-2R**
SITOP compact 24 V/0.6 A Single-phase power supply with wide-range input 85 … 264 V AC/110 … 300 V DC, stabilized output voltage 24 V, rated output current value 0.6 A, slim-line design	**6EP1331-5BA00**
C-PLUG Swap medium for simple replacement of devices in the event of a fault; for storing configuration or engineering and application data; can be used for SIMATIC NET products with C-PLUG slot	**6GK1900-0AB00**

	Article No.
System connection of automation systems	
SIMATIC NET CP 443-1 (conformal coating) for use in AS 410 Communication module for connecting SIMATIC S7-400 to Industrial Ethernet through TCP/IP, ISO, and UDP; PROFINET IO controller, MRP; integrated real-time switch ERTEC with two ports; 2 × RJ45 interface; S7 communication, open communication (SEND/RECEIVE) with FETCH/WRITE, with or without RFC 1006, DHCP, SNMP V2, diagnostics, multicast, access protection over IP access list, initialization over LAN 10/100 Mbit/s; with electronic manual on DVD	**6GK7443-1EX30-0XE1**
SIMATIC NET CP 443-1 Communication module for connecting SIMATIC S7-400 to Industrial Ethernet through TCP/IP, ISO and UDP; PROFINET IO Controller, MRP; integrated real-time switch ERTEC with 2 ports; 2 × RJ45 interface; S7 communication, open communication (SEND/RECEIVE) with FETCH/WRITE, with or without RFC 1006, DHCP, SNMP V2, diagnostics, multicast, access protection over IP access list, initialization over LAN 10/100 Mbps with electronic manual on DVD	**6GK7443-1EX30-0XE0**
SIMATIC NET CP 443-1 Advanced With security functionality (firewall and VPN) Communication module for connection of SIMATIC S7-400 to Industrial Ethernet: 1 × 10/100/1000 Mbps; 4 × 10/100 Mbps (IE SWITCH); RJ45 ports; ISO; TCP; UDP; PROFINET IO controller, S7 communication; open communication (SEND/RECEIVE); S7 routing; IP configuration via DHCP/block; IP Access Control List; time synchronization; expanded Web diagnostics; Fast Startup; PROFIenergy support; IP routing; FTP; Web server; e-mail; PROFINET CBA	**6GK7443-1GX30-0XE0**

[1] Special fiber-optic cables, lengths and accessories available on request

[2] Special tools and specially trained personnel are required for pre-assembling glass fiber-optic cables

Overview

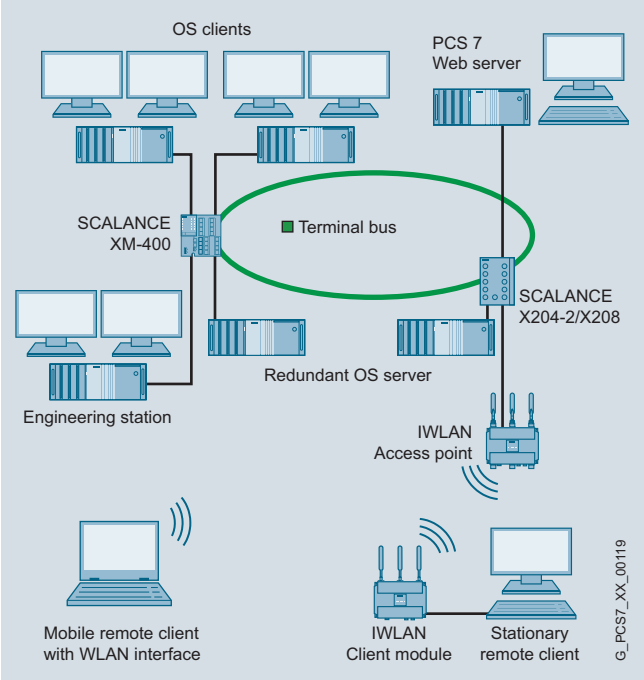

SIMATIC PCS 7 provides the option for integrating mobile or stationary remote clients via an Industrial Wireless LAN (IWLAN) Access Point of the SCALANCE W760, W770 or W780 product ranges into the terminal bus.

The following applications, for example, can be implemented in this manner:

- Configuration of additional remote OS clients (up to 2 on IWLAN)
- Linking of Web clients to a SIMATIC PCS 7 Web server (up to 2 Web clients on IWLAN)
- Remote access to an engineering station using the "RealVNC" software (Enterprise Edition), e.g., during commissioning

Mobile remote clients (e.g. notebooks) equipped with a WLAN interface can use it to communicate with the IWLAN access point. Stationary remote clients in a desktop/tower housing (SIMATIC PCS 7 Industrial Workstations) require an IWLAN client module of the SCALANCE W720, W730 or W740 client range for communication with the IWLAN access point.

The IWLAN client modules and the IWLAN access points of the SCALANCE W700 product family are very rugged, use state-of-the-art authentication and encryption procedures, and ensure high wireless channel reliability. By means of link aggregation and parallel use of several antennas (MIMO technology) in accordance with the international standard IEEE 802.11n you can achieve gross data transfer rates of up to **450 Mbit/s**.

Various designs are offered for the following operational environments:

- IWLAN client modules and access points for control cabinets
- IWLAN client modules and access points for indoor use
- IWLAN access points for outdoor use (also configurable as IWLAN client modules)

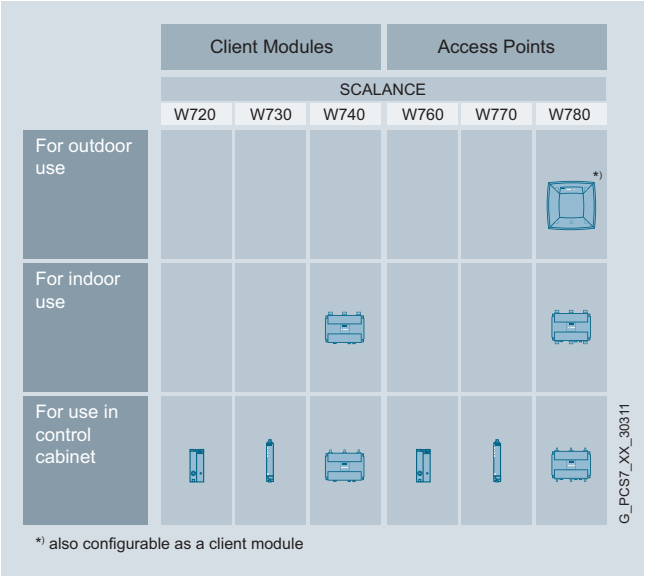

SCALANCE W access points and clients according to IEEE 802.11n

The C-PLUG swap medium for saving configuring data supports rapid exchange of equipment without specially trained personnel.

In addition to this, the KEY-PLUG swap medium can enable additional functions for products of the SCALANCE W700 family.

Note:

Note that Industrial Wireless LAN is not approved as terminal bus or plant bus of SIMATIC PCS 7.

Design

Product categorization according to environment of use

IWLAN products for control cabinets

The IWLAN client modules and IWLAN access points intended for installation in control cabinets are a low-cost alternative for indoor areas with less harsh environmental conditions. They are particularly suited for setting up infrastructures in which great temperature differences and protection against dust and water are less important.

IWLAN products for indoor use

IWLAN client modules and IWLAN access points of this category can be installed at the location that is most favorable for the wireless link in indoor areas. The devices with IP65 protection offer exceptional protection against dust and water and tolerate large differences in temperature. The enclosure and the connectors are resistant to high levels of shock and vibration.

IWLAN products for outdoor use

The IWLAN access points designed for installation outdoors and in publicly accessible areas are extremely rugged devices for high climatic demands and can be installed at a location that is most favorable for the wireless link. They are resistant to condensation, UV radiation, and salt spray.

IWLAN client modules for control cabinets	
SCALANCE W721-1 RJ45 	• A wireless card permanently installed in the device • Compact design for space-saving installation in control cabinets or boxes on a standard mounting rail • Implementation of simple and cost-effective wireless networking • Degree of protection IP20 • For use at ambient temperatures from 0 to +55 °C • Supports IEEE 802.11a/b/g/h/n; 2.4 GHz and 5 GHz frequency band; data transfer rate up to 150 Mbit/s • 1 × R-SMA socket for the connection of a remote antenna • 1 × RJ45 port for 10/100 Mbit/s • 1 × 24 V DC connection • Function LEDs for optical signaling of faults and operating states • SIMATIC design matches existing components in the control cabinet (e.g. ET 200SP)
SCALANCE W722-1 RJ45 	• A wireless card is permanently installed in the device; suitable for establishing wireless connections with iFeatures, e.g. cyclic real-time data transfer and very fast roaming (iPCF, iPCF MC) • Further properties as described under SCALANCE W721-1 RJ45

IWLAN client modules for control cabinets	
SCALANCE W734-1 RJ45 	• A wireless card is permanently installed in the device; functional scope can be expanded by using a KEY-PLUG W740 iFeatures • Low-profile, compact aluminum enclosure, shock and vibration-proof for high mechanical requirements • Implementation of simple and cost-effective wireless networking • Degree of protection IP20 • For use at ambient temperatures from -20 ... +60 °C • Supports IEEE 802.11a/b/g/h/n; 2.4 GHz and 5 GHz frequency band; data transfer rate up to 300 Mbit/s • 2 × R-SMA sockets for the connection of direct mountable and remote antennas • Antenna placement optimized for the 2×2 MIMO technology; the antennas do not interfere with each other when they are mounted directly on the device • 2 × RJ45 connector for 10/100/1000 Mbit/s, of which one connector with Power-over-Ethernet according to IEEE 802.3at • 2 × 24 V DC connection for redundant power infeed • 1 × PLUG compartment for KEY-PLUG/C-PLUG • Function LEDs for optical signaling of faults and operating states • Mounting on wall, S7-1500 rail, S7-300 rail, or 35 mm standard rail • SIMATIC design matches existing components in the control cabinet
SCALANCE W748-1 RJ45 	• A wireless card is permanently installed in the device; functional scope can be expanded by using a KEY-PLUG W780 iFeatures • Rugged aluminum enclosure, shock and vibration-proof, for high mechanical requirements • Dust protection with IP30 degree of protection • For use at ambient temperatures from -20 ... +60 °C • Supports IEEE 802.11a/b/g/h/n; 2.4 GHz and 5 GHz frequency band; data transfer rate up to 450 Mbit/s • 3 × R-SMA sockets for the connection of directly mountable and remote antennas (6 × R-SMA sockets for the variants with 2 wireless modules) • Antenna placement optimized for the 3×3 MIMO technology; the antennas do not interfere with each other when they are mounted directly on the device • 1 × RJ45 connector for 10/100/1 000 Mbit/s with Power-over-Ethernet according to IEEE 802.3at • 2 × 24 V DC connection for redundant power infeed • 1 × PLUG compartment for KEY-PLUG/C-PLUG • Function LEDs for optical signaling of faults and operating states • Digital input for feeding in a signal (e.g. from a sensor) to an SNMP-based network management system • Digital output for converting a command received over SNMP into a signal and switching a hardware function • Mounting on wall, S7-1500 rail, S7-300 rail, or 35 mm standard rail

Design (continued)

IWLAN access points for control cabinets

SCALANCE W761-1 RJ45

- A wireless card permanently installed in the device
- Compact design for space-saving installation in control cabinets or boxes on a standard mounting rail
- Implementation of simple and cost-effective wireless networking
- Degree of protection IP20
- For use at ambient temperatures from 0 ... +55 °C
- Supports IEEE 802.11a/b/g/h/n; 2.4 GHz and 5 GHz frequency band; data transfer rate up to 150 Mbit/s
- 1 × R-SMA socket for the connection of a remote antenna
- 1 × RJ45 port for 10/100 Mbit/s
- 1 × 24 V DC connection
- Function LEDs for optical signaling of faults and operating states
- SIMATIC design matches existing components in the control cabinet (e.g. ET 200SP)

SCALANCE W774-1 RJ45

- A wireless card is permanently installed in the device; functional scope can be expanded by using a KEY-PLUG W780 iFeatures
- Low-profile, compact aluminum enclosure, shock and vibration-proof for high mechanical requirements
- Implementation of simple and cost-effective wireless networking
- Degree of protection IP20
- For use at ambient temperatures from -20 ... +60 °C
- Supports IEEE 802.11a/b/g/h/n; 2.4 GHz and 5 GHz frequency band; data transfer rate up to 300 Mbit/s
- 2 × R-SMA sockets for the connection of direct mountable and remote antennas
- Antenna placement optimized for the 2×2 MIMO technology; the antennas do not interfere with each other when they are mounted directly on the device
- 2 × RJ45 connector for 10/100/1000 Mbit/s, of which one connector with Power-over-Ethernet according to IEEE 802.3at
- 2 × 24 V DC connection for redundant power infeed
- 1 × PLUG compartment for KEY-PLUG/C-PLUG
- Function LEDs for optical signaling of faults and operating states
- Mounting on wall, S7-1500 rail, S7-300 rail, or 35 mm standard rail
- SIMATIC design matches existing components in the control cabinet (e.g. ET 200SP)

IWLAN access points for control cabinets

SCALANCE W788 RJ45

- Two product versions; functional scope can be expanded by KEY-PLUG W780 iFeatures:
  - SCALANCE W788-1 RJ45 with one wireless card permanently installed
  - SCALANCE W788-2 RJ45 with two wireless cards permanently installed
- Rugged aluminum enclosure, shock and vibration-proof, for high mechanical requirements
- Dust protection with IP30 degree of protection
- For use at ambient temperatures from -20 ... +60 °C
- Supports IEEE 802.11a/b/g/h/n; 2.4 GHz and 5 GHz frequency band; data transfer rate up to 450 Mbit/s
- 3 × R-SMA sockets for the connection of directly mountable and remote antennas (6 × R-SMA sockets for the variants with 2 wireless modules)
- Antenna placement optimized for the 3×3 MIMO technology; the antennas do not interfere with each other when they are mounted directly on the device
- 1 × RJ45 connector for 10/100/1 000 Mbit/s with Power-over-Ethernet according to IEEE 802.3at
- 2 × 24 V DC connection for redundant power infeed
- 1 × PLUG compartment for KEY-PLUG/C-PLUG
- Function LEDs for optical signaling of faults and operating states
- Digital input for feeding in a signal from a sensor, for example, to an SNMP-based network management system
- Digital output for converting a command received over SNMP into a signal and switching a hardware function
- Mounting on wall, S7-1500 rail, S7-300 rail, or 35 mm standard rail

IWLAN client modules for indoor use

SCALANCE W748-1 M12

- A wireless card is permanently installed in the device; functional scope can be expanded by using a KEY-PLUG W780 iFeatures
- Rugged aluminum enclosure, shock and vibration-proof, for high mechanical requirements
- High IP65 degree of protection against dust and water jets
- For use at ambient temperatures from -20 ... +60 °C
- Supports IEEE 802.11a/b/g/h/n; 2.4 GHz and 5 GHz frequency band; data transfer rate up to 450 Mbit/s
- 3 × N-Connect sockets for the connection of directly mountable and remote antennas (6 × N-Connect sockets for the variants with 2 wireless modules)
- Antenna placement optimized for the 3×3 MIMO technology; the antennas do not interfere with each other when they are mounted directly on the device
- 1 × M12 connector for 10/100/1 000 Mbit/s with Power-over-Ethernet according to IEEE 802.3at
- 1 × M12 socket for power supply (24 V DC)
- 1 × PLUG compartment (KEY-PLUG/C-PLUG)
- Function LEDs for optical signaling of faults and operating states
- Mounting on wall, S7-1500 rail, S7-300 rail, or 35 mm standard rail

Design (continued)

IWLAN access points for indoor use

SCALANCE W788 M12

- Two product versions; functional scope can be expanded by KEY-PLUG W780 iFeatures:
  - SCALANCE W788-1 M12 with one wireless card permanently installed
  - SCALANCE W788-2 M12 with two wireless cards permanently installed
- Rugged aluminum enclosure, shock and vibration-proof, for high mechanical requirements
- High IP65 degree of protection against dust and water jets
- For use at ambient temperatures from -20 ... +60 °C
- Supports IEEE 802.11a/b/g/h/n; 2.4 GHz and 5 GHz frequency band; data transfer rate up to 450 Mbit/s
- 3 × N-Connect sockets for the connection of directly mountable and remote antennas (6 × N-Connect sockets for the variants with 2 wireless modules)
- Antenna placement optimized for the 3×3 MIMO technology; the antennas do not interfere with each other when they are mounted directly on the device
- 1 × M12 connector for 10/100/1 000 Mbit/s with Power-over-Ethernet according to IEEE 802.3at
- 1 × M12 socket for power infeed (24 V DC)
- 1 × PLUG compartment (KEY-PLUG/C-PLUG)
- Function LEDs for optical signaling of faults and operating states
- Mounting on wall, S7-1500 rail, S7-300 rail, or 35 mm standard rail

SCALANCE W788-2 M12 EEC for enhanced environmental conditions

Main features like SCALANCE W788 M12. Deviating or additional features:

- Two wireless cards are permanently installed; functional scope can be expanded by KEY-PLUG W780 iFeatures
- For use at ambient temperatures from -40 ... +70 °C
- 6 × N-Connect sockets for the connection of direct mountable and remote antennas
- Special coating of the printed circuit boards (conformal coating)
- Resistant to condensation
- Railroad approval in accordance with EN 50155

IWLAN access points for outdoor use

SCALANCE W786 RJ45

- Three product versions; functional scope can be expanded by KEY-PLUG W780 iFeatures:
  - SCALANCE W786-1 RJ45 with 1 wireless card permanently installed in the device; connections for 3 external antennas
  - SCALANCE W786-2 RJ45 with 2 radio cards permanently installed; connections for 6 external antennas
  - SCALANCE W786-2IA RJ45 with 2 radio cards permanently installed; 6 internal antennas
- Rugged, impact-resistant plastic enclosure, shock and vibration-proof for demanding mechanical requirements
- High IP65 degree of protection against dust and water jets
- For use at ambient temperatures from -40 ... +60 °C
- Supports IEEE 802.11a/b/g/h/n; 2.4 GHz and 5 GHz frequency band; data transfer rate up to 450 Mbit/s
- Resistant to condensation
- Resistant to UV radiation and salt spray
- 3 × R-SMA sockets for the connection of remote antennas (6 × R-SMA sockets or 6 internal antennas for the variants with 2 wireless modules)
- 1 × RJ45 connector for 10/100/1 000 Mbit/s and Power-over-Ethernet according to IEEE 802.3at
- 1 × 24 V DC connection, optional operation with 12 to 24 V DC or 100 to 240 V AC with power supply integrated into device
- 1 × PLUG compartment (KEY-PLUG/C-PLUG)
- Function LEDs for optical signaling of faults and operating states
- Resistant to destruction through connections within the device
- Mounting on wall, with optional mounting set on S7 rail, 35 mm standard rail, or on a pole
- Can also be configured as client modules (max. 1 wireless module) using the web-based management system

SCALANCE W786-2 SFP

Main features like SCALANCE W786 RJ45. Deviating or additional features:

- Two wireless cards permanently installed in the device; can be expanded to establish wireless connections with KEY-PLUG W780 iFeatures
- Two slots for SFP plug-in transceivers (optical 2-port switch)
- For use at ambient temperatures from -40 ... +60 °C (depending on the SFP plug-in transceiver used)
- 6 × R-SMA sockets for the connection of remote antennas

Ordering data

	Article No.
IWLAN products for control cabinets	
Client modules for control cabinets	
SCALANCE W721-1 RJ45 IWLAN Ethernet client module with integrated wireless interface; wireless networks IEEE 802.11a/b/g/h/n at 2.4/5 GHz up to 150 Mbit/s; WPA2/AES; IP20 degree of protection (0 ... +55 °C) Product package: Mounting hardware, 3-pin screw terminal for 24 V DC; manual on CD; English/German For administration of the wireless connection of one device with Industrial Ethernet connection	
• National approvals for operation outside the U.S.	**6GK5721-1FC00-0AA0**
• National approvals for operation within the U.S.[1)]	**6GK5721-1FC00-0AB0**
SCALANCE W722-1 RJ45 IWLAN Ethernet client module with iFeatures support and integrated wireless interface; wireless networks IEEE 802.11a/b/g/h/n at 2.4/5 GHz up to 150 Mbit/s; WPA2/AES; IP20 degree of protection (0 ... +55 °C) Product package: Mounting hardware, 3-pin screw terminal for 24 V DC; manual on CD; English/German For administration of the wireless connection of one device with Industrial Ethernet connection; with iFeatures	
• National approvals for operation outside the U.S.	**6GK5722-1FC00-0AA0**
• National approvals for operation within the U.S.[1)]	**6GK5722-1FC00-0AB0**
SCALANCE W734-1 RJ45 IWLAN Ethernet client module with integrated wireless interface; wireless networks IEEE 802.11a/b/g/h/n at 2.4/5 GHz up to 300 Mbit/s; WPA2/AES; integrated 2-port switch; Power over Ethernet (PoE), IP30 degree of protection (-20 ... +60 °C) Product package: Mounting hardware, 4-pin screw terminal for 24 V DC; manual on CD; English/German For managing the wireless connection of up to eight linked devices with Industrial Ethernet connection;	
• National approvals for operation outside the U.S.	**6GK5734-1FX00-0AA0**
• National approvals for operation within the U.S.[1)]	**6GK5734-1FX00-0AB0**

	Article No.
SCALANCE W748-1 RJ45 IWLAN Ethernet client module with integrated wireless interface; wireless networks IEEE 802.11a/b/g/h/n at 2.4/5 GHz up to 450 Mbit/s; WPA2/AES; Power over Ethernet (PoE), IP30 degree of protection (-20 ... +60 °C) Product package: Mounting hardware; 4-pin screw terminal for 24 V DC, 4-pin screw terminal for digital input and output; manual on CD, German/English For administration of the radio link of up to eight devices with Industrial Ethernet connection; IP30 degree of protection	
• National approvals for operation outside the U.S.	**6GK5748-1FC00-0AA0**
• National approvals for operation within the U.S.[1)]	**6GK5748-1FC00-0AB0**
Access points for control cabinets	
SCALANCE W761-1 RJ45 IWLAN access point with integrated wireless interface; wireless networks IEEE 802.11a/b/g/h/n at 2.4/5 GHz up to 150 Mbit/s; WPA2/AES; IP20 degree of protection (0 ... +55 °C) Product package: Mounting hardware, 3-pin screw terminal for 24 V DC; manual on CD; English/German	
• National approvals for operation outside the U.S.	**6GK5761-1FC00-0AA0**
• National approvals for operation within the U.S.[1)]	**6GK5761-1FC00-0AB0**
SCALANCE W774-1 RJ45 IWLAN access point with integrated wireless interface for establishing wireless connections with iFeatures; wireless networks IEEE 802.11a/b/g/h/n at 2.4/5 GHz up to 300 Mbit/s; WPA2/AES; integrated 2-port switch; Power over Ethernet (PoE), IP30 degree of protection (-20 ... +60 °C) Product package: Mounting hardware, 4-pin screw terminal for 24 V DC; manual on CD; English/German	
• National approvals for operation outside the U.S.	**6GK5774-1FX00-0AA0**
• National approvals for operation within the U.S.[1)]	**6GK5774-1FX00-0AB0**

Ordering data	Article No.
SCALANCE W788 RJ45 IWLAN access points with integrated wireless interfaces; wireless networks IEEE 802.11a/b/g/h/n at 2.4/5 GHz up to 450 Mbit/s; WPA2/AES; Power over Ethernet (PoE), IP30 degree of protection (-20 to +60 °C)	
Product package: Mounting hardware; 4-pin screw terminal for 24 V DC, 4-pin screw terminal for digital input and output; manual on CD, German/English	
• **SCALANCE W788-1 RJ45** IWLAN access point with one integrated wireless interface	
- National approvals for operation outside the U.S.	**6GK5788-1FC00-0AA0**
- National approvals for operation within the U.S.[1]	**6GK5788-1FC00-0AB0**
• **SCALANCE W788-2 RJ45** IWLAN access point with two integrated wireless interfaces	
- National approvals for operation outside the U.S.	**6GK5788-2FC00-0AA0**
- National approvals for operation within the U.S.[1]	**6GK5788-2FC00-0AB0**
IWLAN products for indoor use	
Client modules for indoor use	
SCALANCE W748-1 M12 IWLAN Ethernet client module with integrated wireless interface; wireless networks IEEE 802.11a/b/g/h/n at 2.4/5 GHz up to 450 Mbit/s; WPA2/AES; Power over Ethernet (PoE), IP65 degree of protection (-20 ... +60 °C)	
Product package: Mounting hardware; manual on CD, German/English	
For managing the wireless connection of up to eight linked devices with Industrial Ethernet connection	
• National approvals for operation outside the U.S.	**6GK5748-1GD00-0AA0**
• National approvals for operation within the U.S.[1]	**6GK5748-1GD00-0AB0**
Access points for indoor use	
SCALANCE W788 M12 IWLAN access point with integrated wireless interfaces; wireless networks IEEE 802.11a/b/g/h/n at 2.4/5 GHz up to 450 Mbit/s; WPA2/AES; Power over Ethernet (PoE), IP65 degree of protection (-20 ... +60 °C)	
Product package: Mounting hardware; manual on CD, German/English	
• **SCALANCE W788-1 M12** IWLAN access point with one integrated wireless interface	
- National approvals for operation outside the U.S.	**6GK5788-1GD00-0AA0**
- National approvals for operation within the U.S.[1]	**6GK5788-1GD00-0AB0**
• **SCALANCE W788-2 M12** IWLAN access point with two integrated wireless interfaces	
- National approvals for operation outside the U.S.	**6GK5788-2GD00-0AA0**
- National approvals for operation within the U.S.[1]	**6GK5788-2GD00-0AB0**

	Article No.
SCALANCE W788 M12 EEC for extended environmental conditions IWLAN dual access point with two integrated wireless interfaces; wireless networks IEEE 802.11a/b/g/h/n at 2.4/5 GHz up to 450 Mbit/s; railway approval in accordance with EN 50155; conformal coating; WPA2/AES; Power over Ethernet (PoE), IP65 degree of protection	
Product package: Mounting hardware; manual on CD, German/English	
• National approvals for operation outside the U.S.	**6GK5788-2GD00-0TA0**
• National approvals for operation within the U.S.[1]	**6GK5788-2GD00-0TB0**
IWLAN products for outdoor use	
Access points for outdoor use	
SCALANCE W786 IWLAN access points with integrated wireless interfaces; wireless networks IEEE 802.11a/b/g/h/n at 2.4/5 GHz up to 450 Mbit/s; WPA2/AES; Power over Ethernet (PoE), IP65 degree of protection (-40 to +60 °C)	
Product package: Mounting hardware, 2-pin screw terminal for 24 V DC; manual on CD; English/German	
• **SCALANCE W786-1 RJ45** IWLAN access point with one integrated wireless interface and RJ45 connection: Connections for three external antennas	
- National approvals for operation outside the U.S.	**6GK5786-1FC00-0AA0**
- National approvals for operation within the U.S.[1]	**6GK5786-1FC00-0AB0**
• **SCALANCE W786-2 RJ45** IWLAN access point with two integrated wireless interfaces and RJ45 connection: Six connections for external antennas	
- National approvals for operation outside the U.S.	**6GK5786-2FC00-0AA0**
- National approvals for operation within the U.S.[1]	**6GK5786-2FC00-0AB0**
• **SCALANCE W786-2IA RJ45** IWLAN access point with two integrated wireless interfaces and RJ45 connection: Six internal antennas	
- National approvals for operation outside the U.S.	**6GK5786-2HC00-0AA0**
- National approvals for operation within the U.S.[1]	**6GK5786-2HC00-0AB0**
• **SCALANCE W786-2 SFP** IWLAN access point with two integrated wireless interfaces and RJ45 connection: Six external antennas	
- National approvals for operation outside the U.S.	**6GK5786-2FE00-0AA0**
- National approvals for operation within the U.S.[1]	**6GK5786-2FE00-0AB0**

Ordering data

	Article No.
Accessories	
KEY-PLUG W740 iFeatures Swap medium for enabling additional iFeatures, for simple device replacement if a fault occurs and for storage of configuration data; can be used in SCALANCE W client modules with PLUG compartment	**6GK5907-4PA00**
KEY-PLUG W780 iFeatures Swap medium for enabling additional iFeatures, for simple device replacement if a fault occurs and for storage of configuration data; can be used in SCALANCE W access points with PLUG compartment	**6GK5907-8PA00**
C-PLUG Swap medium for simple replacement of devices in the event of a fault; for storing configuration data; can be used in SIMATIC NET products with PLUG compartment	**6GK1900-0AB00**
DIN rail mounting adapter DIN rail mounting adapter for SCALANCE W788 M12 and SCALANCE W788 RJ45; screw fixing for mounting on a 35 mm DIN rail to EN 50022 Product package: 3 units per pack	**6GK5798-8ML00-0AB3**
MS1 mounting set Mounting set for fixing the SCALANCE W786 products onto an S7-300 rail or a 35 mm DIN rail	**6GK5798-8MG00-0AA0**
Power supply	
PS791-2DC power supply 24 V DC power supply for installation in SCALANCE W786 products; operating instructions in English/German	**6GK5791-2DC00-0AA0**
PS791-2AC power supply 110 to 230 V AC power supply for installation in SCALANCE W786 products; operating instructions in English/German	**6GK5791-2AC00-0AA0**
Connection components	
SFP plug-in transceiver for SCALANCE W786-2 SFP	
• SFP992-1 Gigabit, multimode, 750 m	**6GK5992-1AL00-8AA0**
• SFP992-1LD Gigabit, singlemode, 10 km	**6GK5992-1AM00-8AA0**
• SFP992-1LH Gigabit, singlemode, 40 km	**6GK5992-1AN00-8AA0**
• SFP992-1LH+ Gigabit, singlemode, 70 km	**6GK5992-1AP00-8AA0**
Fiber-optic cables	See Catalog IK PI, Industrial Ethernet, cabling systems, glass fiber-optic cables
IE FC RJ45 Plug 180 2×2 RJ45 plug connector for Industrial Ethernet with a rugged metal enclosure and integrated insulation-displacement contacts for connecting Industrial Ethernet FC installation cables; with a 180° cable outlet; for network components and CPs/CPUs with Industrial Ethernet interface	
• 1 pack = 1 unit	**6GK1901-1BB10-2AA0**
• 1 pack = 10 units	**6GK1901-1BB10-2AB0**
• 1 pack = 50 units	**6GK1901-1BB10-2AE0**

	Article No.
IE FC Standard Cable GP 2×2 4-core, shielded TP installation cable for connection to IE FC outlet RJ45 plug / IE FC RJ45 plug; PROFINET-compliant; with UL approval; sold by the meter; max. quantity 1 000 m, minimum order 20 m	**6XV1840-2AH10**
IE FC RJ45 Plug 4×2 RJ45 plug connector for Industrial Ethernet (10/100/1000 Mbit/s) with a rugged metal enclosure and integrated insulation displacement contacts for connecting Industrial Ethernet FC installation cables; 180° cable outlet; for network components and CPs/CPUs with Industrial Ethernet interface	
• 1 pack = 1 unit	**6GK1901-1BB11-2AA0**
• 1 pack = 10 units	**6GK1901-1BB11-2AB0**
• 1 pack = 50 units	**6GK1901-1BB11-2AE0**
IE FC M12 Plug PRO 4×2 M12 plug-in connector suitable for on-site assembly (X-coded, IP65/IP67), metal enclosure, insulation/displacement fast connection method, for SCALANCE W	
• 1 unit	**6GK1901-0DB30-6AA0**
• 8 units	**6GK1901-0DB30-6AA8**
IE FC Standard Cable GP 4×2 8-core (4×2), shielded TP installation cable for connection to IE FC RJ45 Plug 4×2 and IE M12 Plug PRO 4×2; PROFINET-compliant; with UL approval; sold by the meter; max. length 1 000 m, minimum order 20 m	**6XV1878-2A**
Power M12 Cable Connector PRO Socket for connection of SCALANCE W-700 for 24 V DC supply; 4-pole, a-coded, with mounting instructions, 3 units	**6GK1907-0DC10-6AA3**
Power cable 2×0.75 Connecting cable for Power M12 Cable Connector PRO, sold by the meter	**6XV1812-8A**
IE FC Stripping Tool Pre-adjusted stripping tool for fast stripping of the Industrial Ethernet FC cables	**6GK1901-1GA00**
Antennas and miscellaneous IWLAN accessories for IWLAN access points and IWLAN client modules	See Catalog IK PI, Industrial Wireless LAN, accessories

[1] Please note national approvals under www.siemens.com/wireless-approvals

More information

For further information and detailed technical specifications on the IWLAN products for SIMATIC PCS 7, refer to Catalog IK PI, the Industry Mall or Catalog CA 01 under "Industrial Communication > Industrial Wireless Communication > Industrial Wireless LAN".

Selection tools

The following tools will help you to select your product:

SIMATIC NET Selection Tool

- Online version: www.siemens.com/snst
- Offline version: www.siemens.com/snst-download

TIA Selection Tool

- www.siemens.com/tia-selection-tool

Radio approvals

Current approvals can be found on the Internet:

- www.siemens.com/wireless-approvals

Overview

PROFINET – The Ethernet standard for automation

With more than 9.8 million devices worldwide (at end of 2014), PROFINET is the leading Industrial Ethernet standard for automation (source: PROFIBUS & PROFINET International (PI)). Because it combines the advantages of the leading fieldbus PROFIBUS and of the Ethernet open network standard, it is characterized by very high flexibility, efficiency, and performance. These factors are essential for the acceleration of the information processes, increased plant availability, and increased productivity in a company.

Benefits

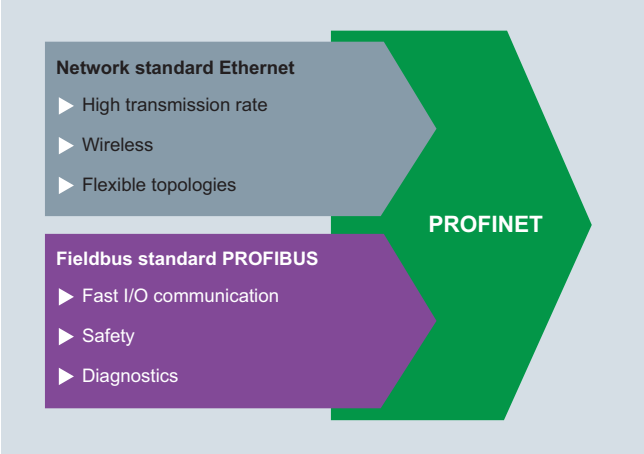

- PROFINET is the open Industrial Ethernet standard for automation
- PROFINET is based on Industrial Ethernet
- PROFINET uses TCP/IP and IT standards
- PROFINET is Real-Time Ethernet
- PROFINET permits seamless integration of fieldbus systems
- PROFINET supports fail-safe communication via PROFIsafe
- PROFINET integrates HART communication for the configuration of HART field devices

Function

Your advantages at a glance

Flexibility	Efficiency	Performance
Tailor-made plant concepts	Optimal use of resources	Increased productivity
Industrial Wireless LAN	One cable for all purposes	Speed
Safety	Device/network diagnostics	High precision
Flexible topologies	Energy efficiency	Large quantity structures
Open standard	Easy cabling	High transmission rate
Web tools	Fast device replacement	Redundancy
Expandability	Ruggedness/stability	Fast start-up

G_IK10_XX_10304

Function (continued)

PROFINET aspects focused on process automation

Open standard

The open vendor-independent standard (IEC 61158/61784), PROFINET, is supported by PROFIBUS and PROFINET International (PI). It stands for maximum transparency, open IT communication, network security and real-time communication down to the field level.

Due to its openness, PROFINET creates the basis for a uniform automation network in the plant to which all of the devices can be connected. Existing plant parts, for example those implemented with the PROFIBUS fieldbus, can be easily integrated.

Flexible topologies

In addition to a line topology, PROFINET also supports star, tree and ring topologies. This is made possible by switching technology, which is based on active network components (Industrial Ethernet switches and Media converters) and field devices/components with integrated switch functionality. This all results in more flexibility for plant planning as well as savings in cabling.

The PROFINET network meets all the requirements relevant for the industrial sector. It can be installed without any specialist knowledge. A PROFINET "Cabling and Interconnection Technology" guideline provides network installation support for manufacturers and users. Symmetrical copper cables or fiber-optic cables resistant to electromagnetic interference are used depending on the application. Devices from various manufacturers are easily connected via rugged, standardized plug-in connectors (up to IP65/IP67).

Expandability

Integrating existing systems and networks is simple and requires little effort and expense. This enables you to protect your investments in plant units with communication via PROFIBUS and other fieldbuses (e.g. AS-Interface).

Additional PROFINET stations can be integrated at any time as well. The use of additional network components allows both wired and wireless network infrastructures to be expanded.

Safety

The PROFIsafe safety profile, which has been tried and tested with PROFIBUS and which permits the transmission of standard and safety-related data on a single bus cable, can also be used with PROFINET. No special network components are required for fail-safe communication, standard switches and standard network transitions can be used without restrictions.

Industrial Wireless LAN (IWLAN)

PROFINET also supports wireless communication with Industrial Wireless LAN and thus opens up new application fields.

Device and network diagnostics

Retaining the proven PROFIBUS model makes the same diagnostic information available for PROFINET. In addition, device diagnostics also includes read-out of module-specific and channel-specific data from the devices. This enables simple and fast location of faults. In addition to the availability of device information, the top priority in network management is to achieve reliable network operation. PROFINET uses the Simple Network Management Protocol (SNMP) for maintenance and monitoring of the network components and their functions.

Easy cabling

Industry-standard networks require no specialist knowledge and can be configured without problems in the shortest possible time. At the same time, stringent demands are placed on the installation of cables in the industrial environment.

Siemens offers the FastConnect assembly system, which meets these requirements. FastConnect is the standards-compliant, industry-standard cabling system for PROFINET networks consisting of cables, connectors, and assembly tools.

The time required for connecting the terminal devices is minimized due to the easy installation using just one tool. The practical color coding helps avoid installation errors. Both copper cables and glass fiber-optic cables can be easily assembled onsite in this way.

Ruggedness/stability

An automation network must be extremely resistant to external sources of interference. Switched Ethernet prevents faults in one section of the network from influencing the entire plant network. Highly resistant fiber-optic cables can be used in particularly EMC-critical areas.

Speed and precision

PROFINET communication is fast, deterministic and precise. It is based on Real Time Ethernet (RT) with prioritization of the transmission and division of the bandwidth.

With PROFIdrive, the standardized drive profile, vendor-independent communication between CPUs and drives can be implemented as well.

Large quantity structures

A SIMATIC PCS 7 controller (automation system) can manage up to 256 devices in the field via PROFINET. The number of nodes in a PROFINET network is practically unlimited since the entire IP address range is available.

With 64 KB of user data per message frame, the transmittable volume of data on PROFINET is significantly greater than with PROFIBUS DP with 244 bytes.

High transmission rate

Based on Ethernet, PROFINET with 100 Mbit/s in full duplex mode achieves a significantly higher transmission rate than previous fieldbuses. The transmission of large volumes of data has no effect on the I/O data transfer.

Media redundancy

Higher plant availability can be achieved by means of a redundant installation (ring topology). Media redundancy can be implemented with both external switches and via integrated PROFINET interfaces. It prevents plant standstill should an interruption in the communication in part of the ring installation occur. Re-configuration times of 200 ms can be achieved. Required maintenance and repair work can thus be performed without time pressure.

Overview

When configuring PROFINET communication, it is generally recommendable to separate the field communication from the plant communication. In the context of the SIMATIC PCS 7 process control system, PROFINET mainly focuses on PROFINET IO communication between the automation systems (controllers) and the process I/O.

The integration of HART communication in PROFINET enables HART field devices on the PROFINET IO to be configured via SIMATIC PDM from a central engineering station.

The following list shows those SIMATIC PCS 7 system components and their PROFINET IO interfaces which are suitable for PROFINET IO communication:

- S7-400 standard automation systems (AS Single Stations) with
  - PROFINET interface in the CPU or
  - CP 443-1 communication module
- S7-400 high availability and safety-related automation systems (AS Single Stations/AS Redundancy Stations) with PROFINET interface in the CPU
- SIMATIC PCS 7 AS RTX PROFINET and SIMATIC PCS 7 BOX RTX with PROFINET interface onboard
- ET 200M remote I/O stations with IM 153-4 PN High Feature interface module
- ET 200SP remote I/O stations with IM 155-6PN High Feature interface module

The Ordering data for automation systems and their PROFINET components can be found in the sections "Modular AS 410 systems", "Complementary S7-400 systems" and "Embedded systems" of chapter "Automation Systems" as well as in the "Compact systems" chapter. The Ordering data for the PROFINET interface modules of the ET 200M and ET 200SP remote I/O stations can be found in the "Process I/O" chapter (section "ET 200M for SIMATIC PCS 7" under "Interface modules" or section "ET 200SP for SIMATIC PCS 7" under "Interface modules and bus adapters").

In addition to specific PROFINET products, Industrial Ethernet products can also be used as network components, e.g. SCALANCE X switches and Media converters, FastConnect connection elements, as well as electrical and optical transmission Media (see the "Communication" chapter, section "Industrial Ethernet" or section "PROFINET/Industrial Ethernet" in the IK PI Catalog).

In addition to the SIMATIC PCS 7 system components for PROFINET communication included in this catalog, the ST PCS 7 AO catalog includes add-on products for SIMATIC PCS 7 which support the integration of further PROFINET IO stations, e.g.

- SIMOCODE pro block library for integration of the SIMOCODE pro V PN motor management system via PROFINET IO
- Drive ES PCS 7 APL with function blocks and faceplates for integration of variable-speed SINAMICS drives via PROFINET IO
- Block library LIBRARY PAC/3WL/3VA SIMATIC PCS 7 for integration of 3VA power switches and the 7KM PAC3200/4200 measuring devices
- AS-Interface block library for integration of AS-i slaves (sensors/actuators) via the IE/AS-i LINK PN IO (single or double master) on the PROFINET IO

Design

Based on line, star, tree, and ring topologies, numerous network configurations can be implemented with PROFINET IO for the field communication of the SIMATIC PCS 7 process control system. The remote I/O stations can be connected directly via an interface module or using SCALANCE X switches.

The configuration settings available depend on the version of the automation system. PROFINET architectures with SIMATIC PCS 7 AS RTX PROFINET or SIMATIC PCS 7 BOX RTX correspond to architectures with an S7-400 AS single station, in which the PROFINET IO communication is carried out via the CPU interface. PROFINET architectures for AS single stations and S7-400 AS redundant stations differ in principle.

The following configuration examples are also applicable to safety-related PROFINET IO architectures. However, this requires the use of safety-related system components from the "Safety Integrated for Process Automation" product range as a communication partner (for more information, see the "Safety Integrated for Process Automation" chapter). The PROFIsafe profile for the transmission of safety-related data is integrated in PROFINET as standard.

Design (continued)

Typical PROFINET configurations with S7-400 AS single stations

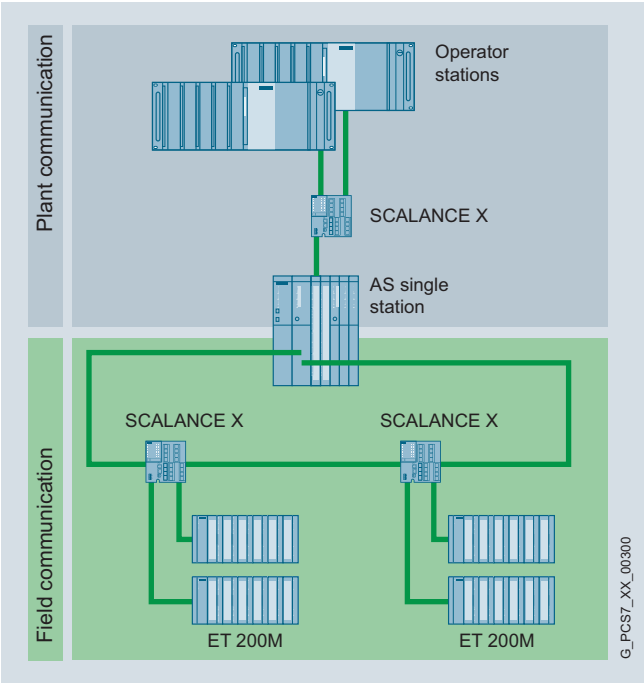

Networking of PROFINET IO stations via SCALANCE X switches

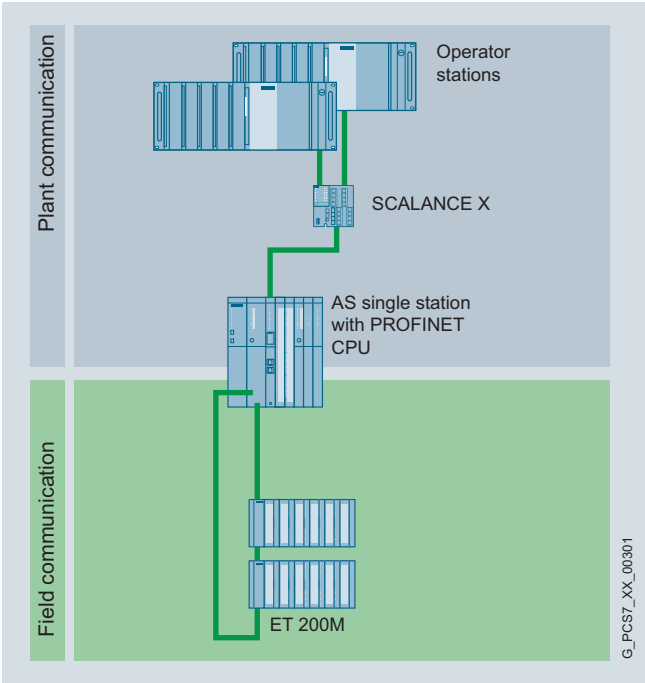

Direct networking of PROFINET IO stations via integrated interfaces

When using AS single stations, PROFINET IO configurations with ring topology and Media redundancy ensure higher availability of the I/O devices than other configurations. If the ring wire is interrupted or if a station fails, the redundancy manager imMediately activates an alternative communication path, thus preventing failure of the entire segment.

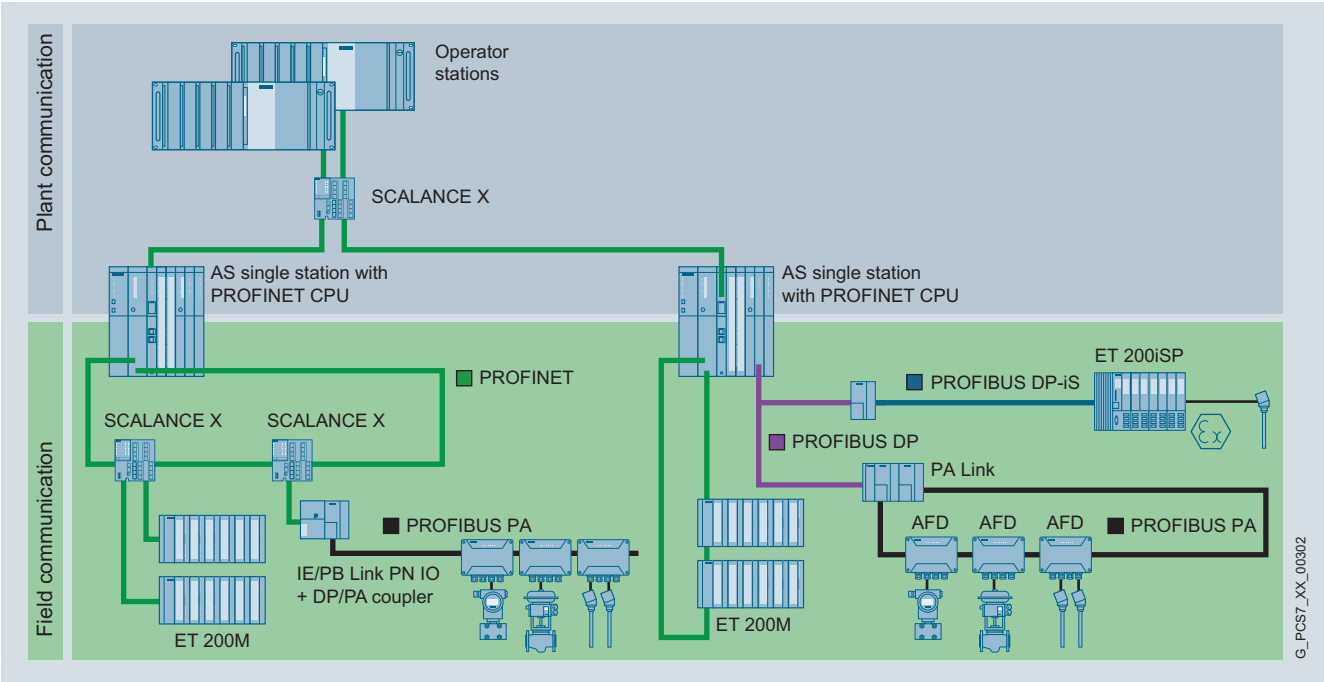

Fieldbus integration via network transition or fieldbus interface in the automation system

Design (continued)

PROFIBUS DP and PROFIBUS PA fieldbus types can be integrated via an IE/PB Link PN IO network transition in PROFINET.

You can also integrate the PROFIBUS DP/PA or FOUNDATION Fieldbus H1 fieldbuses in the automation system via a PROFIBUS interface (for Ordering data, see Automation systems chapter, Standard automation systems section):

- PROFIBUS DP interface in the CPU
- CP 443-5 communication module

Typical PROFINET configurations with S7-400 AS single stations

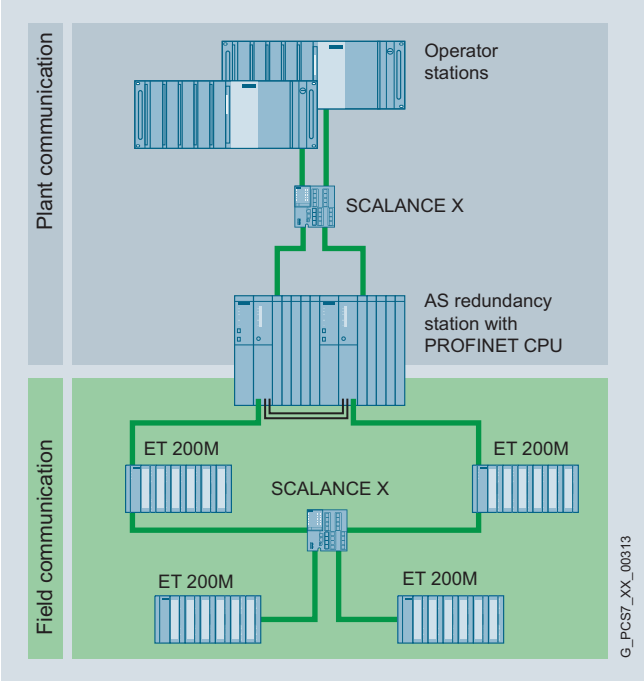

PROFINET IO ring configuration with AS redundancy station

The maximum availability with minimum error handling times is achieved by AS redundancy stations in conjunction with the system redundancy of the I/O devices. System redundancy refers to a type of PROFINET IO communication where each I/O device establishes a communication connection to each of the two CPUs of an AS redundancy station over the topological network. In contrast to the single-sided I/O device connection to only one CPU, failure of a CPU in this case does not automatically lead to failure of the connected I/O devices.

Ordering data

	Article No.
Network transition to fieldbus integration in PROFINET	
IE/PB LINK PN IO Network transition between Industrial Ethernet and PROFIBUS DP	**6GK1411-5AB00**

Overview

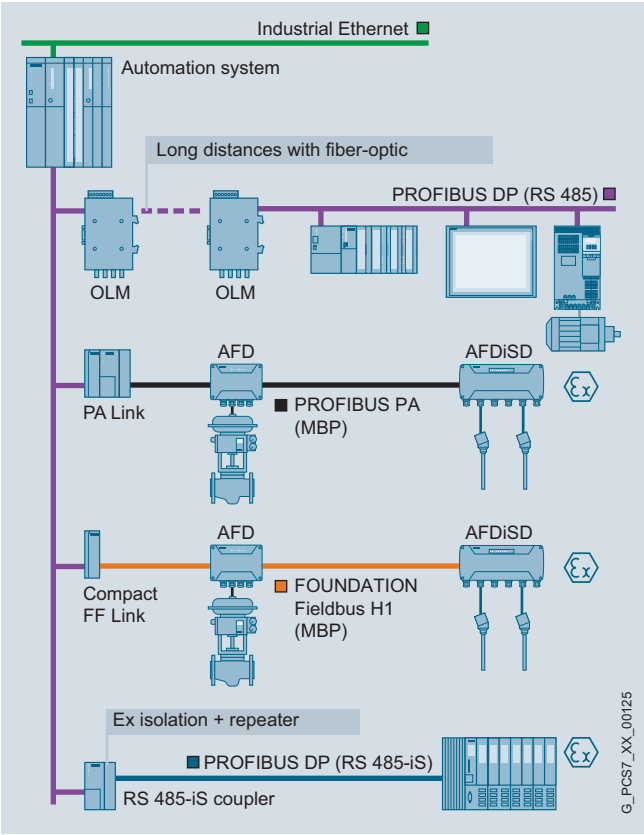

Communication at field level with PROFIBUS

Distributed peripherals such as remote I/O stations with their I/O modules, transmitters, drives, valves or operator terminals communicate with the automation systems (controllers) at field level through a powerful real-time bus system. This communication is characterized by:

- Cyclic transmission of process data
- Acyclic transfer of interrupts, parameters and diagnostics data

PROFIBUS is predestined for these tasks because it enables high-speed communication with the intelligent distributed I/Os by means of a communications protocol (PROFIBUS DP) as well as communication and simultaneous power supply for transmitters and actuators (PROFIBUS PA).

PROFIBUS is simple, rugged and reliable, can be expanded online by further distributed components, and can be used in both standard environments and hazardous areas. It supports the coexistence of field devices from different vendors on one line (interoperability) as well as the vendor-independent exchangeability of devices from one profile family.

Benefits

SIMATIC PCS 7 utilizes the benefits of the PROFIBUS from start to finish:

- Small planning and engineering overheads as well as low commissioning costs
- Optimum distributed system structure with low hardware and space requirements
- Significantly reduced overhead for wiring, jumpering, distribution, power supply and field mounting
- High-speed communication with high measurement accuracy
- Efficient engineering, interoperability and replaceability of devices through vendor-independent device description
- Short commissioning times through short loop tests, easy parameterization and the elimination of calibration work
- Bidirectional communication and high amounts of information permit enhanced diagnostics functions for fast fault locating and troubleshooting
- Optimum life cycle management thanks to processing and evaluation of diagnostics and status information by the Maintenance Station

Function

Users have numerous facilities for communication and line diagnostics, as well as for diagnostics of the intelligent field devices connected. Furthermore, the PROFIBUS is fully integrated into the global asset management with the Maintenance Station of the SIMATIC PCS 7 process control system.

For process automation, the following PROFIBUS functions are particularly relevant in addition:

- Integration of previously installed HART devices
- Redundancy
- Safety-related communication with PROFIsafe up to SIL 3 according to IEC 61508
- Time-of-day synchronization
- Time tagging

PROFIBUS transmission systems

PROFIBUS DP

- **RS 485**
  Simple and low-cost electrical transmission system based on shielded two-wire cable.
- **RS 485-iS**
  Intrinsically-safe electrical transmission system for hazardous areas up to Ex zone 1 or 21, implemented using a shielded two-wire cable with a transmission rate of 1.5 Mbps.
- **Fiber-optic**
  Optical transmission system with glass or plastic fiber-optic cables, for fast transmission of large quantities of data in environments with high interferences or for covering long distances.

PROFIBUS PA

- **MBP (Manchester coded; bus powered)**
  Intrinsically-safe transmission system which permits simultaneous transmission of digital data and powering of the field devices by means of a two-wire cable. It is suitable for direct connection of devices in environments up to Ex zone 1 or 21 and associated sensors/actuators in environments up to Ex zone 0 or 20.

Application

The PROFIBUS DP fieldbus enables the SIMATIC PCS 7 automation systems (controllers) to communicate with distributed I/Os from the ET 200 range (remote I/Os) as well as with field/process devices, CPUs/CPs and operator terminals that have a PROFIBUS DP interface. With the aid of the fieldbus isolating transformer (RS 485-iS coupler) and the RS 485-iS transmission technology, PROFIBUS DP can be run as an intrinsically-safe fieldbus in all environments up to Ex zone 1 or 21.

Controller communication with intelligent distributed devices on PROFIBUS PA, FOUNDATION Fieldbus H1 or HART I/Os is also implemented via PROFIBUS DP.

In a SIMATIC PCS 7 automation system, PROFIBUS DP lines can be connected to distributed process I/O both via a PROFIBUS DP interface in the CPU and via a CP 443-5 Extended communication module. On a PROFIBUS DP line it is possible to operate up to 125 devices, and on a bus segment up to 31 devices with PROFIBUS DP interface (32 stations).

Electrical and optical transmission technologies offer many different configuration options for PROFIBUS DP networks. Electrical networks can span up to approx. 10 km. With optical transmission systems, the total size of the network is governed primarily by the cycle times as a result of the almost loss-free transmission.

With SIMATIC PCS 7, PROFIBUS DP topologies are always implemented through the standard electrical PROFIBUS DP connection on the automation system in the form of electrical or mixed (electrical/optical) networks. In the case of mixed networks, the transition between the two Media is implemented by an optical link module (OLM). As regards communication between the stations, there is no difference between electrical two-wire technology and fiber-optic technology.

Electrical networks can be configured with a line or tree topology. Mixed electrical/optical networks with OLMs as routers can be configured with a line, ring or star topology.

Technical specifications

PROFIBUS DP			
Data transmission	**RS 485**	**RS 485-iS**	**Fiber-optic**
Transmission rate	9.6 kbit/s ... 12 Mbit/s	9.6 kbit/s ... 1.5 Mbit/s	9.6 kbit/s ... 12 Mbit/s
Cable	2-wire shielded	2-wire shielded	Plastic as well as multi-mode and single-mode glass-fiber
Type of protection		EEx(ib)	
Topology	Line, tree	Line	Ring, star, line
Nodes per segment	32	32[1)]	–
Nodes per network (with repeater)	126	126	126
Cable length per segment dependent on transmission rate	1 200 m at max. 93.75 kbit/s 1 000 m at 187.5 kbit/s 400 m at 500 kbit/s 200 m at 1.5 Mbit/s 100 m at 12 Mbit/s	1 000 m at 187.5 kbit/s[1)] 400 m at 500 kbit/s [1)] 200 m at 1.5 Mbit/s [1)]	Max. 80 m (plastic) 2 ... 3 km (multimode glass fiber) >15 km at 12 Mbit/s (single-mode glass-fiber)
Repeater for signal refreshing with RS 485 networks	Max. 9	Max. 9[1)]	Not relevant

[1)] According to PROFIBUS installation guideline 2.262

Overview

The simple and cost-effective two-wire RS 485 transmission technology is exceptionally suitable for networks with a linear/tree structure and high data transmission rates. Shielded, twisted pair cables are used as the transmission medium. The PROFIBUS DP nodes are connected to these bus cables using bus connectors.

Design

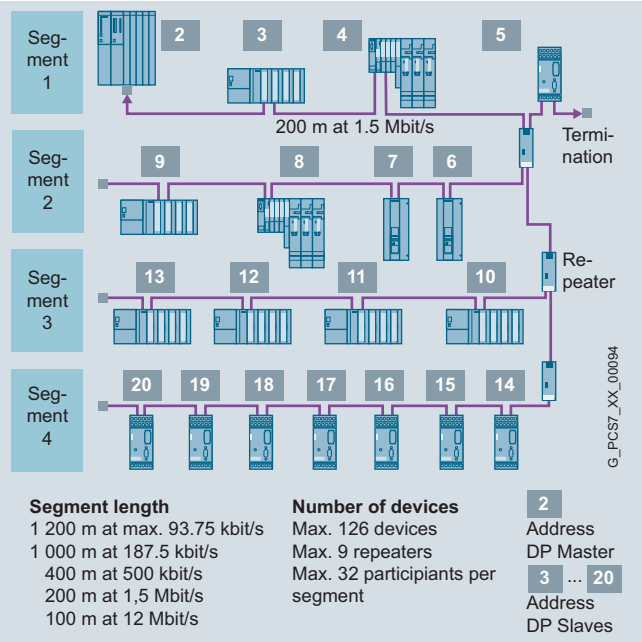

Configuration example of an electrical RS 485 network with linear/tree structure

The network size with an electrical RS 485 network is in total smaller than that with an optical network. However, by using segmenting and signal regeneration with up to 9 repeaters, distances from 1 km (at 12 Mbps) up to 10 km (at 187.5 kbit/s) can be achieved depending on the transmission rate.

A segment can have up to 32 participants (master/slaves), and the total network up to 126 participants. The start and end of each segment must be terminated by an active bus resistor which is typically pre-integrated in the device (e.g. repeater) or is available as an active RS 485 termination element.

The configuration example (figure at top right) shows a typical addressing scheme for a PROFIBUS DP network made up of multiple segments. Although repeaters are electrical participants on the PROFIBUS, they are not assigned a slave address since they are not directly addressed by the master.

FastConnect

FastConnect Stripping Tool

PROFIBUS FastConnect is a system for fast and easy assembly of PROFIBUS copper cables. The system comprises compatible components:

- FastConnect Standard Cable for fast assembly
- FastConnect Stripping Tool
  with FastConnect Blade Cassettes (spare blade cassettes for the stripping tool)
- FastConnect bus connector for PROFIBUS

Repeater for PROFIBUS

A repeater links the individual bus segments with RS 485 technology. Main applications are:

- Increase in number of nodes and distances
- Electrical isolation of segments

If diagnostics functions for physical cable diagnostics are desired in addition to the standard repeater functionality, a diagnostic repeater can be alternatively used. It monitors the copper bus cables in online mode. In the event of a fault it sends a diagnostic message with detailed information about the type and location of the fault to the DP master.

Active RS 485 terminating element

The active RS 485 terminating element is used to terminate bus segments. The component supplied with 24 V DC independent of the bus nodes provides a defined RS 485 signal level, and suppresses reflections on the line. Bus nodes (e.g. ET 200S) can be coupled and decoupled without feedback to/from PROFIBUS networks terminated by active RS 485 terminating elements.

Design (continued)

RS 485-iS coupler

The RS 485-iS coupler is an isolating transformer with which the PROFIBUS DP fieldbus can be routed intrinsically-safe into the hazardous area.

The RS 485-iS coupler has the following functions:

- Connection of intrinsically-safe PROFIBUS DP stations, e.g. ET 200iSP or devices from other vendors with Ex i DP connection
- Conversion of the electrical PROFIBUS DP RS 485 transmission technology into the intrinsically-safe RS 485-iS transmission technology with a transmission rate of 1.5 Mbps
- Suitable as a safety barrier
- Additional use as a repeater in the hazardous area.

The RS 485-iS coupler as an open resource can only be used in housings, cabinets or rooms for electrical equipment. It is assembled on a SIMATIC S7-300 rail which can be positioned horizontally or vertically.

The RS 485-iS coupler is integrated into the PROFIBUS as follows:

- Connection to standard PROFIBUS DP via standard Sub-D socket (at the bottom on the RS 485-iS coupler, behind the right front door).
- Connection of PROFIBUS DP with RS 485-iS transmission technology via screw terminals (at the top of the RS 485-iS coupler, behind the right front door)
- The last bus node on the intrinsically-safe PROFIBUS DP segment (not further RS 485-iS couplers) must be terminated by a selectable terminating resistor using the connector, order no. 6ES7972-0DA60-0XA0.

Ordering data

	Article No.
PROFIBUS FastConnect Standard Cable, violet Standard type with special design for fast mounting, 2-core, shielded, cut-to-length Specify length in m Max. delivery unit 1 000 m, minimum order quantity 20 m	**6XV1830-0EH10**
Preferred lengths	
- 20 m	**6XV1830-0EN20**
- 50 m	**6XV1830-0EN50**
- 100 m	**6XV1830-0ET10**
- 200 m	**6XV1830-0ET20**
- 500 m	**6XV1830-0ET50**
- 1 000 m	**6XV1830-0EU10**
PROFIBUS FastConnect Standard Cable IS GP, blue Cable type for use in potentially explosive atmospheres, with special design for fast mounting, 2-core, shielded, cut-to-length Specify length in m Max. delivery unit 1 000 m, minimum order quantity 20 m	**6XV1831-2A**
Further PROFIBUS cables with associated specifications	See Catalog IK PI
PROFIBUS FastConnect Stripping Tool Preadjusted stripping tool for fast stripping of PROFIBUS FastConnect bus cables	**6GK1905-6AA00**
PROFIBUS FastConnect Blade Cassettes Spare blade cassettes for PROFIBUS FastConnect stripping tool, 5 units	**6GK1905-6AB00**
PROFIBUS FastConnect bus connector RS 485 with 90° cable outlet With insulation displacement 15.8 × 59 × 35.6 mm (W × H × D) max. Data transfer rate 12 Mbps	
• No programming port	**6ES7972-0BA52-0XA0**
• With programming port	**6ES7972-0BB52-0XA0**

	Article No.
PROFIBUS FastConnect bus connector RS 485 Plug 180 With 180° cable outlet, with insulation displacement system, for connection of PC, PG, OP Other bus connectors See Catalog IK PI	**6GK1500-0FC10**
RS 485 Repeater for PROFIBUS Data transfer rate max. 12 Mbit/s, 24 V DC, IP 20 enclosure	**6ES7972-0AA02-0XA0**
RS 485 Diagnostic Repeater For connection of 1 or 2 segments to PROFIBUS DP; with online diagnostics functions for monitoring the bus lines	**6ES7972-0AB01-0XA0**
Active RS 485 Terminating Element for PROFIBUS For terminating bus segments for data transfer rates from 9.6 kbit/s to 12 Mbit/s	**6ES7972-0DA00-0AA0**
RS 485-IS Coupler Isolating transformer for connection of PROFIBUS DP segments with RS 485 and RS 485-iS transmission technologies Operating temperature -40 …+70 °C	**6ES7972-0AC80-0XA0**
PROFIBUS connector with selectable terminating resistor For connection of IM 152 to PROFIBUS DP with RS 485-iS transmission technology	**6ES7972-0DA60-0XA0**
S7-300 rails Lengths:	
• 160 mm	**6ES7390-1AB60-0AA0**
• 482 mm	**6ES7390-1AE80-0AA0**
• 530 mm	**6ES7390-1AF30-0AA0**
• 830 mm	**6ES7390-1AJ30-0AA0**
• 2 000 mm	**6ES7390-1BC00-0AA0**

Note:

For more information on electrical PROFIBUS networks as well as components and accessories, particularly cable material for special applications, refer to Catalog IK PI, Chapter "PROFIBUS", Section "Network components for PROFIBUS – electrical networks".

Overview

Optical networks are more expensive than electrical RS 485 networks, but are insensitive to electromagnetic interference. In addition to purely optical networks, the combination of electrical and optical networks has been established in practice, providing users with the advantages of the respective transmission technologies.

Design

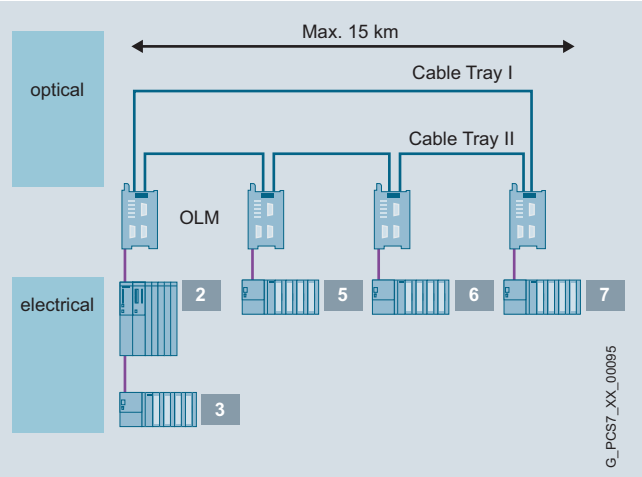

Length between 2 OLMs	**Number of devices**
Plastic: 80 m PCF: 400 m Glass: up to 3 km (singlemode: 15 km) Max. 12 Mbit/s	Max. 32 electrical participiants per OLM Max. 122 OLMs per OLM Ring (depending on PROFIBUS DP bus parameters)

Configuration example of an optical ring combined with an electrical network

A ring structure of the optical network provides fault tolerance since communication is not interrupted in the event that the cable is damaged at one point or interrupted. Electrical bus segments are incorporated into the optical ring using up to 122 optical link modules (OLM). Depending on the version of the OLMs and the bus cable, the distance between two OLMs can be up to 15 km. A maximum of 32 electrical bus participants can be operated on one OLM.

The configuration example shows a typical addressing scheme with mixed transmission technologies. Although OLMs are electrical participants within their respective segment, they are not assigned a PROFIBUS slave address.

Optical Link Module OLM/G22

Optical Link Modules

Optical Link Modules (OLM) permit the construction of optical and hybrid (electrical/optical) networks in line, ring or star topology.

OLMs can be combined with each other and individual stations or complete electrical segments can be integrated into the optical PROFIBUS network through an electrical interface.

OLMs are available with one (P11/G11) or two (P12/G12/G22) fiber-optic (FO) interfaces with BFOC connections. Depending on the version, they are suitable for the following distances when combined with the correspondingly specified plastic/glass fiber-optic cables:

Distance	Fiber-optic conductors	OLM
Up to 80 m	POF-FOC	OLM/P11 or OLM/P12
Up to 400 m	PCF FOC	
Up to 3 km	Glass multimode FOC	Depending on ambient temperature • 0 ... +60 °C: OLM/G11, OLM/G12, or OLM/G22 • -25 ... +60 °C: OLM/G12-EEC
Up to 10 km	Glass multimode FOC	OLM/G11-1300 or OLM/G12-1300
Up to 15 km	Glass singlemode FOC	

We preferably recommend the OLM/G12 as the standard component for optical PROFIBUS networks indoors and outdoors.

The OLMs have a compact metal housing suitable for DIN rail assembly. They automatically recognize all PROFIBUS data transfer rates. Faults can be rapidly located as follows:

- Display of module status via floating signaling contact
- Checking of FO link quality (loss per section) via test output for optical receivers for logging and plausibility checks.

Further information and detailed technical specifications on the various OLM versions can be found in Catalog IK PI, chapter "PROFIBUS", section "Network components for PROFIBUS - Optical networks with OLM".

Bus cables

Suitable for the OLM/G12, fiber-optic cables (FOC) made of glass with 2 multi-mode fibers are preferably used for optical PROFIBUS networks indoors and outdoors.

The standard FIBER OPTIC CABLE is available in fixed lengths up to 2 000 m. It is preassembled with 4 BFOC connectors. A BFOC connector set with 20 connectors is available as an accessory.

Further fiber-optic cables as well as detailed technical specifications can be found in the IK PI Catalog, chapter "PROFIBUS", section "Network components for PROFIBUS - Optical networks".

Ordering data

	Article No.
FIBER OPTIC CABLE **Standard glass FO cable, splittable** Pre-assembled with 4 BFOC connectors	
Preferred lengths	
• 1 m	**6XV1820-5BH10**
• 5 m	**6XV1820-5BH50**
• 10 m	**6XV1820-5BN10**
• 20 m	**6XV1820-5BN20**
• 50 m	**6XV1820-5BN50**
• 100 m	**6XV1820-5BT10**
Other lengths and cables	See Catalog IK PI
BFOC Connector Set [1] For standard and trailing FIBER OPTIC CABLES, 20 units	**6GK1901-0DA20-0AA0**
PROFIBUS OLM/P11 V4.1 Optical Link Module with one RS 485 port and one plastic FOC port (2 BFOC sockets), with signaling contact and measuring output	**6GK1503-2CA01**
PROFIBUS OLM/P12 V4.1 Optical Link Module with one RS 485 port and two plastic FOC ports (4 BFOC sockets), with signaling contact and measuring output	**6GK1503-3CA01**
PROFIBUS OLM/G11 V4.0 Optical Link Module with one RS 485 and one glass FOC interface (2 BFOC sockets), for standard distances up to 3 000 m, with signaling contact and measuring output	**6GK1503-2CB00**
PROFIBUS OLM/G12 V4.0 Optical Link Module with one RS 485 port and two glass FOC ports (4 BFOC sockets), for standard distances up to 3 km, with signaling contact and measuring output	**6GK1503-3CB00**

	Article No.
PROFIBUS OLM/G22 V4.0 Optical Link Module with two RS 485 ports and two glass FOC ports (4 BFOC sockets), for standard distances up to 3 km, with signaling contact and measuring output	**6GK1503-4CB00**
PROFIBUS OLM/G12-EEC V4.0 Optical Link Module with one RS 485 port and two glass FOC ports (4 BFOC sockets), for standard distances up to 3 km, suitable for extended temperature range from -25 to +60 °C, with signaling contact and measuring output	**6GK1503-3CD00**
PROFIBUS OLM/G11-1300 V4.0 Optical Link Module with one RS 485 port and one glass FOC port (2 BFOC sockets), 1 300 nm wavelength for long distances up to 15 km, with signaling contact and measuring output	**6GK1503-2CC00**
PROFIBUS OLM/G12-1300 V4.0 Optical Link Module with one RS 485 port and two glass FOC ports (4 BFOC sockets), 1 300 nm wavelength for long distances up to 15 km, with signaling contact and measuring output	**6GK1503-3CC00**

[1] Additional components of the SIMATIC NET cable product range can be ordered from your local representative. For technical advice, contact:
Siemens AG, SPG Industrial Network and Components,
Fürth, Germany
J. Hertlein
Tel.: +49 911 750-4465
E-mail: juergen.hertlein@siemens.com

Overview

In a SIMATIC PCS 7 automation system, PROFIBUS DP lines can be connected to distributed process I/O both via a PROFIBUS DP interface in the CPU and via a CP 443-5 Extended communication module.

If a module slot provided in the CPU for the PROFIBUS connection is still empty, an IF 964-DP interface module is required in addition.

With the AS 410 modular automation systems, an additional layer is applied to the PCB of CPU 410-5H Process Automation (conformal coating). A CP 443-5 Extended in the conformal coating version is therefore also preferred for the AS 410 (component of the AS bundle configuration).

For information on the type and number of configurable PROFIBUS DP interfaces, see chapter 8 "Automation systems".

Benefits

Advantages of the CP 443-5 Extended communications module:

- Compact design; 9-contact Sub-D socket for connection to PROFIBUS DP
- Simple installation
  Can be plugged into AS rack slot; connection to the other S7-400 modules via backplane bus
- Operation without fan; backup battery or memory submodule are not required
- With additional PBC coating option (conformal coating)

Ordering data

	Article No.
SIMATIC NET CP 443-5 Extended (conformal coating) for use in AS 410 Communications processor for connection of SIMATIC S7-400 to PROFIBUS as DP master or for S7 communication, for increasing the number of DP lines, for data set routing with SIMATIC PDM and for 10-ms time stamping, electronic manual on CD; module occupies 1 slot	**6GK7443-5DX05-0XE1**
SIMATIC NET CP 443-5 Extended Communications processor for connection of SIMATIC S7-400 to PROFIBUS as DP master or for S7 communication, for increasing the number of DP lines, for data set routing with SIMATIC PDM and for 10-ms time stamping, electronic manual on CD; module occupies 1 slot	**6GK7443-5DX05-0XE0**
IF 964-DP Interface module for connection of another PROFIBUS DP line, for plugging into a free DP module slot of the CPU	**6ES7964-2AA04-0AB0**

Overview

The Y-Link is a bus coupler for transition from a redundant PROFIBUS DP master system to a simple, single-channel PROFIBUS DP master system. It can be used to connect devices with only one PROFIBUS DP interface to the redundant PROFIBUS DP master system.

Design

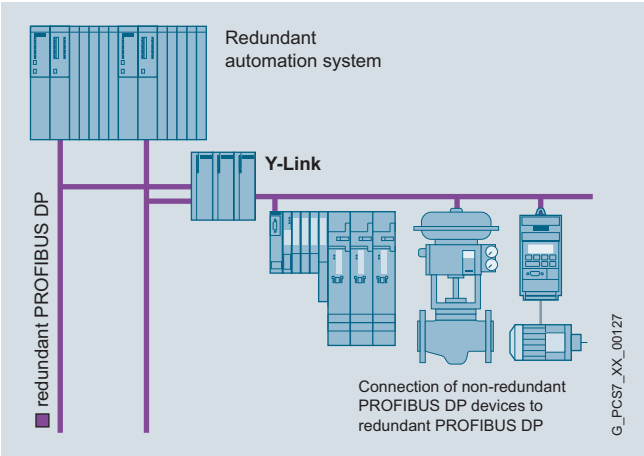

The Y-link comprises:

- Two IM 153-2 High Feature Outdoor interface modules
- One Y-coupler incl. RS 485 repeater
- One BM IM/IM bus module for two IM 153-2 High Feature Outdoor modules
- One BM Y-coupler bus module

Evaluation of the Y-Link diagnostics (and hence indirectly of the connected DP standard slaves) is supported by driver blocks.

It is recommendable to have a redundant -24 V DC supply for the Y-Link, e.g. with two PS 307/PS 305 load power supplies.

Ordering data

	Article No.
Y-Link For connection of devices with only one PROFIBUS DP interface to a redundant automation system, comprising: • 2 IM 153-2 High Feature Outdoor interface modules • 1 Y-coupler • 1 BM IM/IM bus module • 1 BM Y-coupler bus module	**6ES7197-1LA12-0XA0**
PS 307 load current supply Including connecting comb; 120/230 V AC; 24 V DC	
• 2 A; 40 mm wide	**6ES7307-1BA01-0AA0**
• 5 A; 60 mm wide	**6ES7307-1EA01-0AA0**
• 5 A, extended temperature range; 80 mm wide	**6ES7307-1EA80-0AA0**
• 10 A, 80 mm wide	**6ES7307-1KA02-0AA0**
PS 305 load current supply 24/48/60/110 V DC; 24 V DC	
• 2 A, extended temperature range; 80 mm wide	**6ES7305-1BA80-0AA0**

Overview

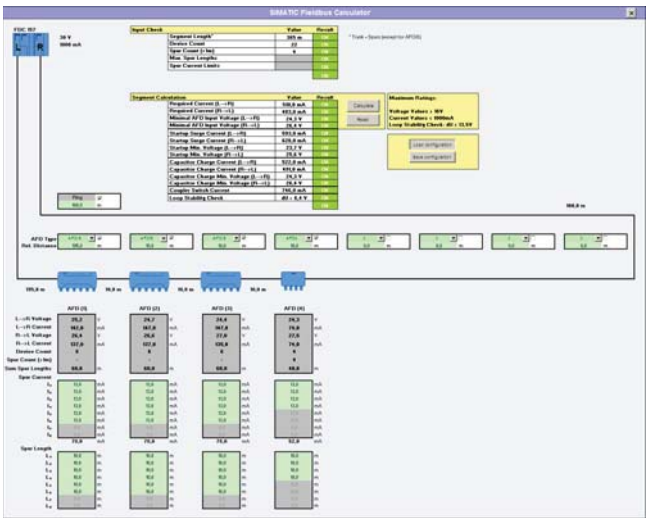

SIMATIC Fieldbus Calculator

Direct interfacing of the devices in the field, especially in the hazardous area, together with the information content of the communication, are of significant importance in the process industry. PROFIBUS PA, which permits both digital data transmission and the power supply on a two-wire line with the intrinsically-safe MBP transmission technology (Manchester Coded; Bus Powered) is tailored to these requirements. It is optimally suitable for direct integration of solenoid valves, sensors, and pneumatic actuators positioned in operating environments up to Ex zone 1/21 or 0/20 into the process control system.

The typical response time of a transmitter of approx. 10 ms indicates that short cycle times can be achieved with the PROFIBUS PA even in the case of a segment configuration with up to 31 devices. Practically all typical applications of the process industry can be implemented, both in small and large plants. Bidirectional communication and high information content allow enhanced diagnostics for fast and exact fault detection and elimination. The standardized communications services guarantee interoperability and replaceability between multi-vendor field devices and remote configuration of the field devices during operation.

Safety communication with the PROFIsafe profile

The PROFIsafe profile allows seamless integration of safety communication into the PROFIBUS PA. You need not configure a separate safety bus for your safety-related applications. The PROFIBUS PA with the PROFIsafe profile is incorporated in "Safety Integrated for Process Automation". This comprehensive range of products and services from Siemens for failsafe, high availability applications in the process industry offers you attractive and cost-effective alternatives to separate safety systems.

Redundant architectures

You can define the degree of redundancy separately for the controller, fieldbus and I/O levels of your plant depending on the automation task and the derived safety requirements, and match them to the field instrumentation (Flexible Modular Redundancy, FMR). You can find an overview of the redundant architectures of PROFIBUS PA under "Design".

Network transition PROFIBUS PA to PROFIBUS DP

The PA link is preferred as the gateway from PROFIBUS PA to PROFIBUS DP. When using the PA link, the transmission rate on the PROFIBUS DP is independent of the lower-level PROFIBUS PA segments. The configuration of the PA link depends on the fieldbus architecture. The types of coupler described in the section "PA routers" can be used for the configuration. With a small amount of data (small quantity framework) and low timing requirements, the DP/PA coupler can also be operated in standalone mode as a router.

Benefits

Advantages provided by distributed field automation with application of the PROFIBUS PA profile included low hardware overhead, cost-effective engineering, increased operational safety and problem-free maintenance. These advantages are underlined by the following features:

- Modularity and uniformity from the sensor up to the control level permit new plant concepts
- Implementation of intrinsically-safe applications through use of the fieldbus in hazardous areas
- Redundant PROFIBUS PA architectures (ring and line topologies with coupler redundancy) support Flexible Modular Redundancy (FMR) from the automation system (controller) down to a PA field device
- Safety-related and high availability applications with low device and cabling requirements
- Reduced configuration costs through simple, central engineering of the field devices (PROFIBUS PA and HART with SIMATIC PDM, also cross-vendor)
- Simple installation using two wire cable for common power supply and data transmission
- Reduced commissioning costs through simplified loop check
- Low servicing costs thanks to simple wiring and comprehensive diagnostics facilities

Design

Examples of PROFIBUS PA architectures

The following graphical representations illustrate possible PROFIBUS PA configuration variants with DP/PA coupler and PA Link routers on the:

- PROFIBUS DP master, simple design (AS Single Station)
- PROFIBUS DP master, redundant design (AS Redundancy Station)

If the DP/PA coupler is operated independently as a PA router, then the connection is then directly on the coupler instead of via the interface module.

The number of PROFIBUS PA devices is limited according to the specifications in the "Technical specifications" section.

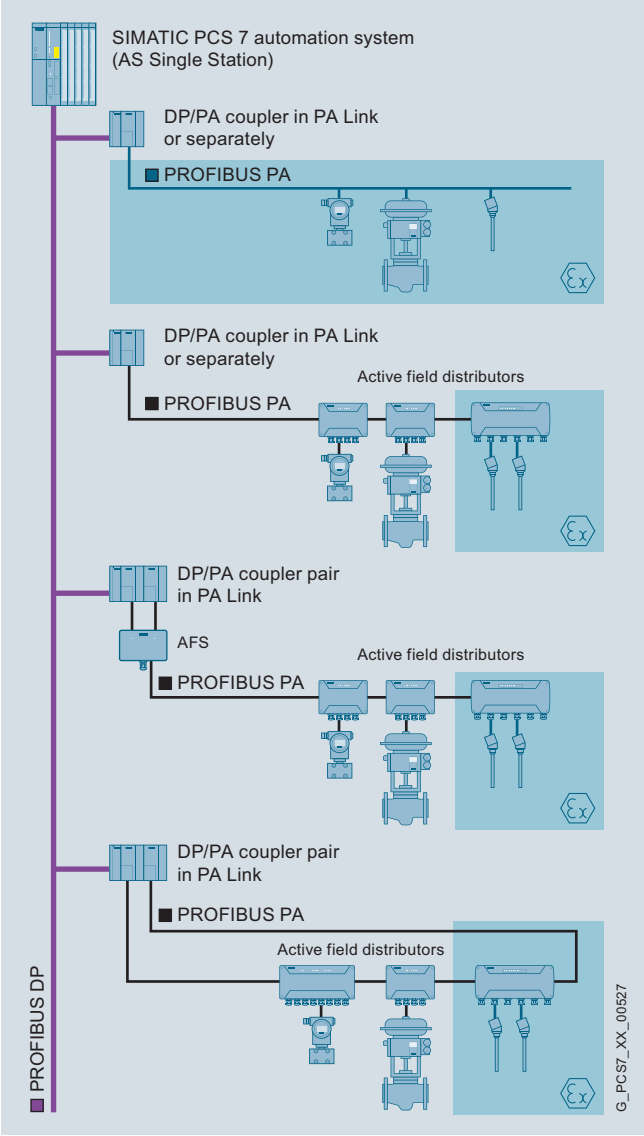

PROFIBUS PA on an AS Single Station as PROFIBUS DP master

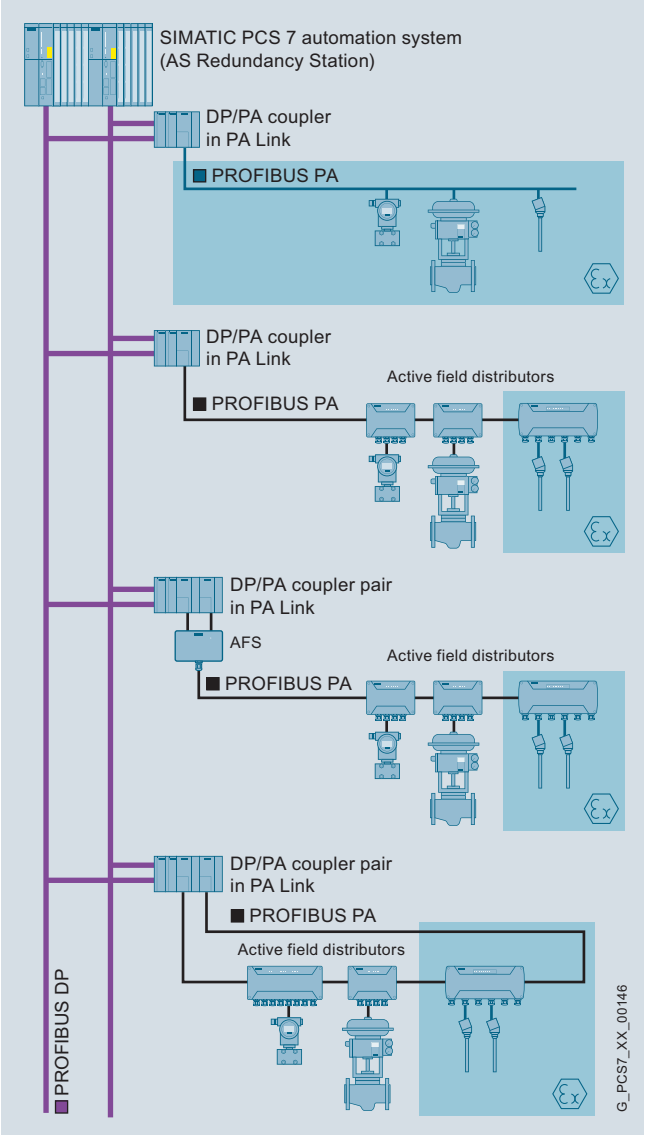

PROFIBUS PA on an AS Redundancy Station as PROFIBUS DP master

Design (continued)

Line architecture with single coupler

In the line architecture with individual couplers, each line segment is connected to one DP/PA coupler each.

If the PA router is an independent DP/PA coupler, then a PROFIBUS PA line (line segment) can be connected. A maximum of 5 line segments can be operated via single couplers (max. 3 for mixed configurations with ring or coupler redundancy) on a PA link as PA router, equipped with up to 5 DP/PA couplers.

The PA router can be connected to a single or redundant PROFIBUS DP, depending on the version (see figures).

The FDC 157-0 is the first choice as the DP/PA coupler. When using this coupler, the PA-devices can be integrated into the line segment via AFD active field distributors, e.g. AFD4, AFD4 RAILMOUNT, AFD4 FM and AFD8 (approval for Ex zone 2/22) and AFDiSD (approval for Ex zone 1/21). The PA devices are connected to these field distributors via short-circuit-proof spur lines.

Alternatively, it is possible to operate up to 8 AFD field distributors, up to 5 AFDiSD field distributors or any combination of up to 5 AFDiSD and AFD field distributors in a line segment. With mixed AFDiSD/AFD operation, however, extended fieldbus diagnostics of the AFDiSD in the PROFIBUS PA is not possible. The last field distributor at the end of the line leading away from the DP/PA coupler automatically activates its bus terminating resistor.

Intrinsically-safe PA devices in hazardous areas in accordance with Ex zone 1/21 or 0/20 are preferably integrated into a bus segment by means of AFDiSD active field distributors. For PA devices in Ex zone 1/21, connection via a line segment on the DP/PA coupler Ex [i] (in the PA Link or independently) is a possible alternative. The devices are integrated separately into the line segment using SpliTConnect taps (via spur line or directly via SpliTConnect M12 outlet). A SplitConnect terminator is required for the bus termination of the segment.

By grouping individual devices in different line segments, Flexible Modular Redundancy is possible at device level.

Line architecture with redundant coupler

The PA Link operable as a PA router on a single or redundant PROFIBUS DP can only be equipped with one redundant DP/PA coupler pair (up to 3 single couplers can also be optionally configured). The redundant DP/PA coupler pair can be used either for a line architecture with Active Field Splitter (AFS) or for a ring architecture.

With a line architecture, the AFS is connected to the redundant DP/PA coupler pair (2 x FDC 157-0) in the PA router. It connects the line segment connected to it to the active of the two redundant DP/PA couplers. A DP/PA coupler can be replaced without interrupting the ongoing operation.

The PA devices are integrated in the line segment as for a line architecture with single couplers via active AFD or AFDiSD field distributors. The limits with respect to the number of field distributors are also identical (up to 8 AFD, up to 5 AFDiSD or up to 5 AFDiSD and AFD combined; for mixed AFDiSD and AFD operation, extended fieldbus diagnostics for the AFDiSD is not possible).

Ring architecture with coupler and Media redundancy

With the redundant DP/PA coupler pair (2 x FDC 157-0) of a PA router, a ring segment with automatic bus termination can also be implemented instead of a line segment with AFS. Apart from the ring segment, only line segments with individual couplers can be configured on this PA router. The PA router can be connected to a single or a redundant PROFIBUS DP.

Integration of the PA field devices into the ring segment is carried out via active AFD or AFDiSD field distributors whose number is limited as with the line architectures (up to 8 AFD, up to 5 AFDiSD or up to 5 AFDiSD and AFD combined; for mixed AFDiSD and AFD operation, extended fieldbus diagnostics for the AFDiSD is not possible). These field distributors have galvanically isolated, short-circuit-proof spur line connections for connecting the PA devices.

At the device level, flexible modular redundancy is possible by grouping individual devices on different field distributors.

Special advantages of the ring architecture:

- High availability
- Transparent redundancy management of the intelligent DP/PA couplers FDC 157-0 for the host system
- Active bus terminators for automatic bus termination in the FDC 157-0 DP/PA couplers and the AFD and AFDiSD active field distributors enable:
  - Automatic, smooth isolation of faulty subsegments in the event of a short-circuit or open-circuit
  - Modification of the ring configuration or instrumentation during operation, including the addition or removal of ring segments
- Safety-related and high availability applications with low device and cabling requirements

Design (continued)

Cable lengths of bus segments and spur lines

The PROFIBUS PA is based on electrical transmission components. A shielded two-wire cable is used for digital data transmission and for the power supply of the field devices.

With line, tree and ring topologies, bus segments up to approx. 1.9 km can be configured. If AFD active field distributors are used, both the length of the spur lines for connecting devices and the quality of the cable used must also be considered when calculating the total length of the bus segment. Spur lines on the AFDiSD are not relevant to the total length of the bus segment.

For bus segments with active field distributors, the spur lines can have the following maximum lengths:

- Up to 120 m in accordance with IEC 61158-2
- Up to 120 m in accordance with IEC 60079-27 (FISCO)

With AFD active field distributors, these maximum values may be reduced depending on the number of spur lines of the bus segment (for details, see the "Technical specifications" section). With AFDiSD active field distributors, this reduction is canceled by the integrated repeater function.

The **SIMATIC Fieldbus Calculator** provides help in calculating and designing fieldbus segments:
http://support.automation.siemens.com/WW/view/en/53842953

Intrinsically-safe PA devices in hazardous areas are preferably integrated into a bus segment by means of AFDiSD active field distributors. For PA devices in Ex zone 1/21, connection via a line segment on the PA router with DP/PA coupler Ex [i] is a possible alternative. In such a configuration the max. possible length per spur line is reduced to 30 m and per bus segment to 1 km.

Bus segments are terminated either automatically (for architectures with AFD or AFDiSD active field distributors) or with the passive terminating element for PROFIBUS PA (SpliTConnect terminator).

Technical specifications

PROFIBUS PA	
Data transmission	MBP
Transmission rate	31.25 Kbps
Cable	2-wire shielded
Type of protection	EEx(ia/ib)
Topology	Line, tree, ring
Active field distributors per segment/ coupler • AFD • AFDiSD or combinations of AFDiSD and AFD	 8 5
PA devices per segment/coupler	31
PA devices per PA link	64
Max. current for all PA field devices of a segment (for PA gateways with FDC 157-0 coupler)	1 A
Cable length per segment • Standard • EEx(ib) • EEx(ia)	 1 900 m 1 900 m 1 000 m
Bus segments with AFD Max. spur line length in relation to the total number of spur lines	
Number of spur lines (1 device per spur line) • 1 to 12 spur lines • 13 to 14 spur lines • 15 to 18 spur lines • 19 to 24 spur lines • 25 to 31 spur lines	 120 m 90 m 60 m 30 m 1 m
Bus segments with AFDiSD Max. spur line length independent of total number of spur lines	
Number of spur lines (1 device per spur line) • 1 to 31 spur lines - Not intrinsically-safe - Intrinsically-safe acc. to FISCO	 120 m 120 m

Overview

PA link, consisting here of IM 153-2 High Feature Outdoor and DP/PA coupler

To create a smooth network transition between PROFIBUS DP and PROFIBUS PA, the SIMATIC product range offers two versions: the DP/PA coupler and the PA link.

The following criteria can be applied when choosing the network transition:

- DP/PA coupler:
  For small quantity frameworks (volumes of data) and low timing requirements; data transfer rate on the PROFIBUS DP limited to 45.45 kbit/s
- PA link:
  For large number of stations and high cycle time requirements; data transfer rate on the PROFIBUS DP up to 12 Mbit/s

Application

The two PA routers are based on two versions of the DP/PA coupler:

- Ex [i] DP/PA coupler (max. output current 110 mA) for implementation of PROFIBUS PA networks with a line or tree topology in environments up to Ex zone 1/21, not for redundant architectures (coupler redundancy, ring)
- FDC 157-0 DP/PA coupler (max. output current 1 000 mA) for implementation of PROFIBUS PA networks with a line, tree or ring topology in environments up to Ex zone 2/22; can be used for the "Ring" and "Line with coupler redundancy" redundant architectures.

DP/PA couplers are also integral components of the PA link (see design, from page 10/76). The PA link connects PROFIBUS DP and PROFIBUS PA together, and decouples the transmission rates. In contrast to the DP/PA coupler which limits the data transmission rate on the PROFIBUS DP to 45.45 kbit/s, the PA link does not influence the performance of the PROFIBUS DP.

The PA link functions as a slave on the PROFIBUS DP and as a master on the PROFIBUS PA. From the viewpoint of the host PROFIBUS DP master, the PA link is a modular slave whose modules are the devices connected on the PROFIBUS PA. Addressing of these devices is carried out indirectly via the PA link that itself only requires one node address. The host PROFIBUS master can scan devices connected to the PA link all at once.

If the router is a DP/PA coupler, the nodes on the PROFIBUS PA are directly addressed by the PROFIBUS DP master (controller). The DP/PA coupler is an electrical node, but is transparent for communication between the master and PA field devices; it therefore does not require setting of parameters or addresses (exception: FDC 157-0 DP/PA coupler used as PROFIBUS diagnostics slave).

PROFIBUS diagnostics with FDC 157-0 DP/PA coupler, configured as PROFIBUS diagnostics slave

FDC 157-0 DP/PA couplers configured as PROFIBUS diagnostics slaves supply extensive diagnostic and status information via PROFIBUS for swift localization and correction of faults:

- I&M (Identification & Maintenance) data
- Current and voltage values on the main cable
- Redundancy status
- Wire breakage
- Short-circuit
- Signal level

To this end, each of these DP/PA couplers FDC 157-0 requires its own PROFIBUS address. This applies independent of use in a PA Link or as a PA router.

The PA link and DP/PA coupler available for use in operating environments up to Ex zone 2/22. Both are operated with 24 V DC. Assembly is on an S7-300 rail with horizontal or vertical alignment.

Design

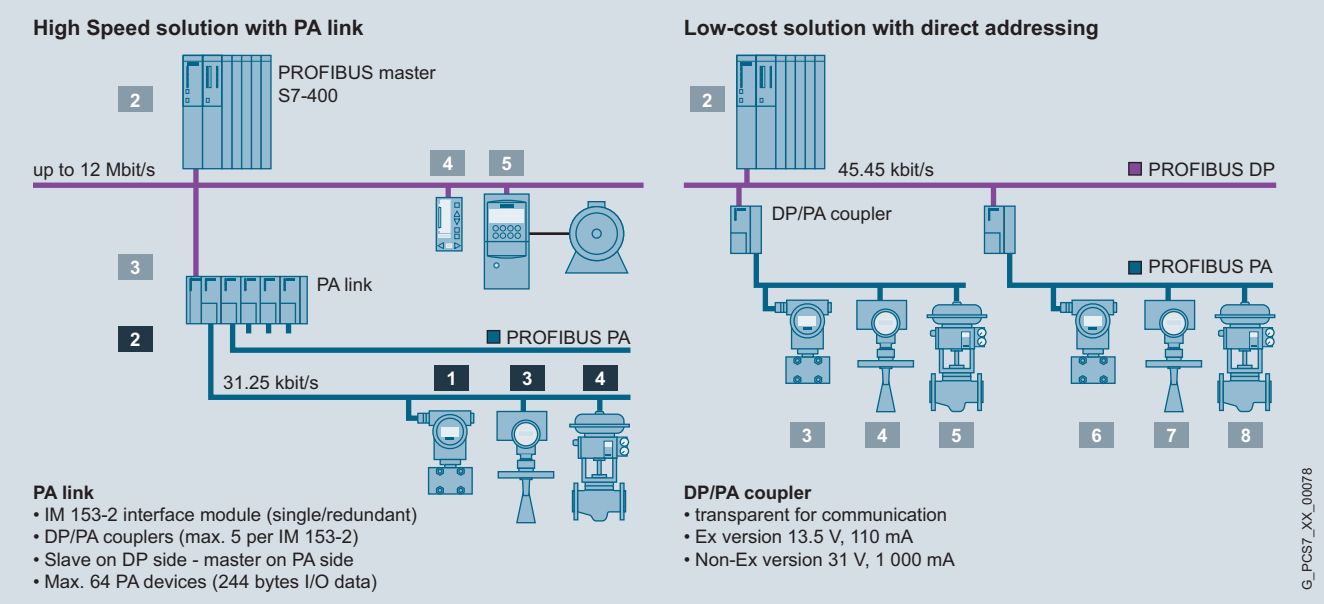

Configuration examples for PA link and DP/PA coupler

PA link

The PA link is a modular combination in S7-300 design consisting of the IM 153-2 High Feature Outdoor PROFIBUS DP interface module (with optional redundancy) and up to 5 DP/PA couplers (FDC 157-0 or Ex [i]).

All components of the PA link are interconnected through the S7 backplane bus. Use of active bus modules on the backplane allows hot swapping of individual modules and redundancy of the IM 153-2 High Feature Outdoor PROFIBUS DP interface modules and the FDC 157-0 DP/PA couplers. If redundancy and changes during operation are not required, passive bus connectors can be used instead of active bus modules.

The PS 307 or PS 305 load power supply can be used for the 24 V DC. With a redundant IM 153-2 High Feature Outdoor PROFIBUS DP interface module, a redundant 24 V DC supply is also recommended, e.g. using two PS 307/PS 305 load current supplies.

The PROFIBUS PA bus segments designed with the DP/PA couplers are physically separated as regards current infeed, but form one bus system in communication terms. A PROFIBUS PA ring segment or a PROFIBUS PA line segment with coupler redundancy can be operated on a PA link. Further PROFIBUS PA line segments can be operated on this PA link using individual couplers. The FDC 157-0 DP/PA couplers provided for the ring coupling or coupler redundancy must always be located at the right-hand end of a sequence of up to 5 couplers.

The following basic components are available for configuring the PA link:

- IM 153-2 High Feature Outdoor interface module
- DP/PA coupler (Ex [i] and FDC 157-0)
- Components for redundant design and for hot swapping:
  - Mounting rail for hot swapping (as an alternative to the standard mounting rail)
  - BM PS/IM for 1 load power supply and 1 IM 153-2 High Feature Outdoor module
  - BM IM/IM for 2 IM 153-2 High Feature Outdoor modules, for redundant and non-redundant configuration
  - BM FDC for 1 DP/PA coupler Ex [i] or FDC 157-0 (up to 5 DP/PA couplers possible per PA link)
  - BM FDC/FDC for 2 DP/PA couplers FDC 157-0

Additive option:

- PS 307 for 120/230 V AC; 24 V DC load power supply, version in 2, 5 or 10 A, or
- PS 305 load power supply for 24/48/60/110 V DC; 24 V DC, 2 A

Technical specifications

DP/PA coupler	
Bus connection	
Connection for PROFIBUS PA • DP/PA coupler Ex [i] • DP/PA coupler FDC 157-0	 2 terminals of a 4-pole screw-type terminal, integrated terminating resistor 4-pole screw-type terminal for connection and looping through, selectable terminating resistor
Connection for PROFIBUS DP	9-pin Sub-D plug, contact assignment as described in IEC 61158/EN 50170
Module-specific data	
Degree of protection	IP20
Transmission rate on PROFIBUS DP	45.45 Kbps
Transmission rate on PROFIBUS PA	31.25 Kbps
Communication protocol	PROFIBUS DP
Voltages, currents, potentials	
Supply voltage	24 V DC (20.4 … 28.8 V)
Reverse polarity protection	Yes
Overvoltage protection	Yes
Voltage at coupler output (PA) • DP/PA coupler Ex [i] • DP/PA coupler FDC 157-0	 13 ... 14 V DC 31 ± 1 V DC
Voltage monitoring	15.5 V
Overvoltage monitoring	U > 35 V; latching cutoff
Voltage failure bridging	Min. 5 ms
Current at coupler output (PA) for supplying the PA field devices • DP/PA coupler Ex [i] • DP/PA coupler FDC 157-0	 max. 110 mA max. 1 A
Galvanic isolation 24 V DC • PROFIBUS DP/PROFIBUS PA • PROFIBUS DP/supply • PROFIBUS PA/supply • All electric circuits/functional grounding	 Yes Yes Yes Yes
Power consumption of modules (24 V DC) • DP/PA coupler Ex [i] • DP/PA coupler FDC 157-0	 Max. 400 mA max. 2.3 A
Power loss of the module • DP/PA coupler Ex [i] • DP/PA coupler FDC 157-0	 Typ. 7 W Typ. 13.4 W
Status, interrupts, diagnostics	
Diagnostics displays DP/PA coupler Ex [i] and DP/PA coupler FDC 157-0 • PROFIBUS DP bus monitoring • PROFIBUS PA bus monitoring • 24 V DC power supply monitoring	 Yellow LED "DP" Yellow LED "PA" Green "ON" LED
Additive diagnostics displays of the DP/PA coupler FDC 157-0 • Group error • Bus error • Monitoring DP/PA coupler (active coupler in redundant configuration)	 Red LED "SF" Red LED "BF" Yellow LED "ACT"
Climatic conditions	
Permissible operating temperature DP/PA coupler Ex [i] and DP/PA coupler FDC 157-0 • Horizontal installation • Vertical installation	 -25 … +60 °C -25 … +40 °C
Dimensions and weight	
Dimensions (W × H × D) in mm	80 × 125 × 130
Weight • DP/PA coupler Ex [i] • DP/PA coupler FDC 157-0	 approx. 550 g Approx. 515 g

IM 153-2 High Feature Outdoor	
Bus connection	
• Connection for PROFIBUS DP	9-pin Sub-D plug, contact assignment as described in IEC 61158/EN 50170, Vol. 2
Connectable lower-level components	
Number of couplers • DP/PA coupler • Y coupler	 max. 5 1
Number of PA devices on PROFIBUS PA	max. 64
Module-specific data	
Degree of protection	IP20
Transmission rate of the higher level DP master system	9.6; 19.2; 45.45; 93.75; 187.5; 500 Kbps; 1.5; 3; 6; 12 Mbps
Communication protocol	PROFIBUS DP
Frame length • I/O data • Configuration frame • Diagnostics frame • Parameter assignment frame	 Max. 244 bytes Max. 244 bytes Max. 244 bytes Max. 244 bytes
Voltages, currents, potentials	
Supply voltage	24 V DC (20.4 … 28.8 V)
Reverse polarity protection	Yes
Voltage failure bridging	20 ms
Galvanic isolation • to the higher-level DP master system • to the DP/PA coupler or Y coupler	 Yes No
Power consumption of modules (24 V DC) • In the PA link • In the Y link	 Max. 200 mA (at 20.4 V) Max. 400 mA (at 20.4 V)
Power loss of the module • In the PA link • In the Y link	 Max. 2.6 W (at 28.8 V) Max. 3.6 W (at 28.8 V)
Infeed, mechanical design	4-pin screw terminal, short-circuiting link between PE and M24; the short-circuiting link must be removed for floating operation (independent of this, the DP interface is always floating)
Status, interrupts, diagnostics	
Diagnostic displays • Group error • Bus error on higher level DP master system • Bus error on underlying bus system • Module is active in redundancy mode • 24 V DC power supply monitoring	 Red LED "SF" Red LED "BF 1" Red LED "BF 2" Yellow LED "ACT" Green "ON" LED
Climatic conditions	
Permissible operating temperature • Horizontal installation • Vertical installation	 -25 … +60 °C -25 … +40 °C
Dimensions and weight	
Dimensions (W × H × D) in mm	40 × 125 × 130
Weight	approx. 360 g

Ordering data

	Article No.
DP/PA coupler For transition from RS 485 to MBP	
• DP/PA coupler Ex [i] Fieldbus coupler between PROFIBUS DP and PROFIBUS PA, EEx(ia) version, max. output current 110 mA; degree of protection IP20; permissible operating temperature 25 ... +60 °C	**6ES7157-0AD82-0XA0**
• DP/PA coupler FDC 157-0 Fieldbus coupler between PROFIBUS DP and PROFIBUS PA, redundancy capable; integrated PROFIBUS diagnostics slave; max. output current 1 A; IP20 degree of protection; permissible operating temperature -25 ... +60 °C	**6ES7157-0AC85-0XA0**
IM 153-2 High Feature Outdoor Interface module for PROFIBUS DP for ET 200M, PA Link and Y-Link; redundancy capable; conformal coating, IP20 degree of protection; permissible operating temperature -25 ... +60 °C	**6ES7153-2BA70-0XB0**
Accessories	
PS 307 Load Power Supply Including connecting comb; 120/230 V AC; 24 V DC	
• 2 A; 40 mm wide	**6ES7307-1BA01-0AA0**
• 5 A; 60 mm wide	**6ES7307-1EA01-0AA0**
• 5 A, extended temperature range; 80 mm wide	**6ES7307-1EA80-0AA0**
• 10 A, 80 mm wide	**6ES7307-1KA02-0AA0**
PS 305 Load Power Supply 24/48/60/110 V DC; 24 V DC	
• 2 A, extended temperature range; 80 mm wide	**6ES7305-1BA80-0AA0**
Standard profile rails (without hot swapping function)	
• 482 mm wide (19 inches)	**6ES7390-1AE80-0AA0**
• 530 mm wide	**6ES7390-1AF30-0AA0**

	Article No.
Components for hot swap and for redundant configuration	
Active bus modules for hot swapping	
• BM PS/IM SIPLUS extreme for 1 load current supply and 1 IM 153-2 High Feature module; for hot swap function, permissible operating temperature -25 ... +70 °C	**6AG1195-7HA00-2XA0**
• BM IM/IM for 2 IM 153-2 High Feature modules, for redundant and non-redundant configuration, for hot swap function, permissible operating temperature -25 ... +60 °C	**6ES7195-7HD80-0XA0**
• BM FDC for 1 DP/PA coupler Ex [i] or FDC 157-0, for hot swap function, permissible operating temperature -25 ... +60 °C	**6ES7195-7HF80-0XA0**
• BM FDC/FDC for 2 DP/PA couplers FDC 157-0, for hot swap function, permissible operating temperature -25 ... +60 °C	**6ES7195-7HG80-0XA0**
Mounting rail for hot swapping For max. 5 active bus modules	
• 482 mm wide (19 inches)	**6ES7195-1GA00-0XA0**
• 530 mm wide	**6ES7195-1GF30-0XA0**
• 620 mm wide	**6ES7195-1GG30-0XA0**
Covers 4 backplane bus covers and 1 cover for active bus module	**6ES7195-1JA00-0XA0**
Bundles	
I/O subsystem for PA Link or ET 200M For PA Link or for ET 200M stations with up to 8 I/O modules, suitable for hot swapping, consisting of: • DIN rail for active bus modules, 482 mm long (19 inches) • PS/IM bus module • PROFIBUS DP interface IM 153-2 High Feature Outdoor	**6ES7654-0XX10-1XA0**
I/O subsystem extended for PA Link or ET 200M For PA Link or for ET 200M stations with up to12 I/O modules, suitable for hot swapping, consisting of: • DIN rail for active bus modules, 620 mm long • PS/IM bus module • PROFIBUS DP interface IM 153-2 High Feature Outdoor	**6ES7654-0XX10-1XB0**
RED I/O subsystem for PA Link or ET 200M For operation of a PA Link or an ET 200M station on a redundant automation system of the S7-400 series, suitable for hot swapping, consisting of: • 2 PROFIBUS DP interfaces IM 153-2 High Feature Outdoor • 1 active bus module IM/IM Outdoor	**6ES7654-0XX20-0XA0**

Overview

Active Field Distributor AFD4

Active Field Distributor AFD4 RAILMOUNT

Active Field Distributor AFD8

Active Field Distributor AFD

Active field distributors (AFD) can be operated in environments in accordance with Division 2, Zone 2 or Zone 22. It is offered with the following models:

- AFD4, AFD4 RAILMOUNT and AFD4 FM with 4 spur line connections for 1 field device each
- AFD8 with 8 spur line connections for 1 field device each

An AFD4, AFD4 RAILMOUNT and AFD4 FM can therefore connect up to 4 field devices, and an AFD8 can connect up to 8 standard-compliant PROFIBUS PA-field devices, via short-circuit proof spur line connections to a PA-fieldbus segment (line/ring) with automatic bus termination.

The PA fieldbus segment can be connected to a single or redundant PROFIBUS DP via a PA router and can thus be seamlessly integrated into the SIMATIC PCS 7 process control system.

Up to 8 active field distributors AFD with a total of up to 31 connected field devices can be operated for each fieldbus segment. The number of field devices is also limited by the current consumption of the field devices. A maximum of 60 mA per spur line and a maximum of 1 A per segment is available for the field devices.

An AFD in a ring segment can be replaced during operation without resulting in failure of the segment.

For compliance with IP66 protection, it is necessary to protect unused spur line connections using plugs.

Active Field Distributor AFD8, open

Based on the AFD4, two product versions with different intentions were developed with the AFD4 RAILMOUNT and the AFD4 FM:

Specific product features of the AFD4 RAILMOUNT

The AFD4 RAILMOUNT is supplied without die-cast aluminum enclosure; it is a product model of the AFD4 active field distributor with flexible installation options. It can be installed on a DIN mounting rail into an enclosure of choice, for example, an enclosure made of stainless steel, die-cast aluminum or plastics.

Overview (continued)

Specific product features of the AFD4 FM

The AFD4 FM with cFMus approval is adapted to the special requirements for product models of the AFD4 active field distributor in the USA and Canada. The AFD4 FM features threaded plugs ex factory, because the cable glands of the AFD4 do not conform to the requirements of cFMus.

The threaded plugs for connecting the main and spur lines must be replaced by the cable glands and cables listed by UL or CSA. This must conform to the US National Electrical Code (NEC) and Canadian Electrical Code (CEC). The user is responsible for the selection and ordering.

Available suppliers for suitable cable glands:

- Cooper Capri SAS
- CMP products

Due to the larger bushing for the main line (M20 instead of M16), sheathed main line cables can also be used for AFD4 FM.

The relevant requirements of the US National Electrical Code (ANSI/NFPA-70 NEC) must be met for the installation of the AFD4 FM.

AFDiSD active field distributor

AFDiSD active field distributor

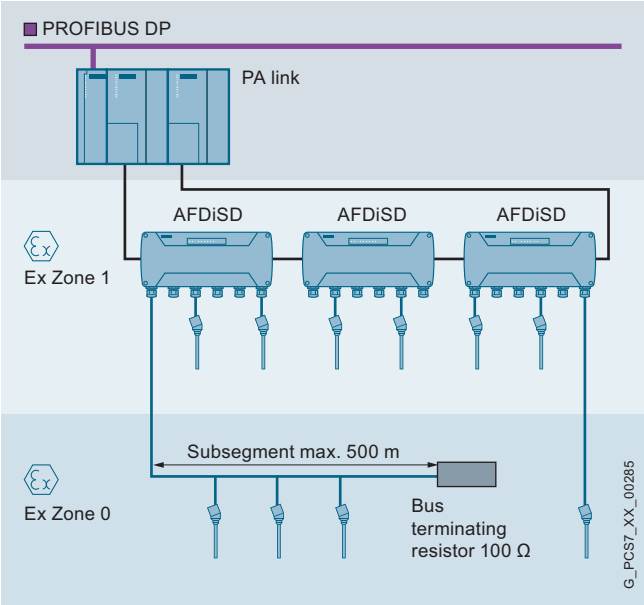

The AFDiSD (Active Field Distributor intrinsically Safe with optional extended PROFIBUS PA diagnostics) PROFIBUS PA field distributor can be operated in environments in accordance with Ex zone 1/21 and 2/22. It is a compatible replacement for AFDiS.

AFDiSDs can integrate up to 6 intrinsically-safe PA field devices in a PA fieldbus segment (line/ring) via its intrinsically-safe, short-circuit proof spur line connections. Instead of the spur line, it is also possible to use a subsegment for 3 to 4 devices with a max. length of 500 m at connection S1. The spur lines with Ex [ia] type of protection as well as the subsegment can be routed into Zone 0/20.

Up to 5 AFDiSD active field distributors with a total of up to 31 field devices can be operated in a fieldbus segment. A limitation of 5 active field distributors is also mandatory for mixed operation of AFD and AFDiSD (extended PA fieldbus diagnostics in mixed operation).

The number of field devices per segment additionally depends on the current consumption of the devices and the cable lengths used. A current of 1 A is available for all field devices and the active field distributors of the segment.

With its integrated repeater function, AFDiSDs have the following advantages compared to the AFD:

- Spur line lengths are independent of the total number of spur lines in the bus segment
- Spur line lengths need not be be taken into account when determining the total length of the bus segment

In environments in accordance with Ex zone 2/22 or in non-hazardous areas, an AFDiSD in a ring segment can be replaced during operation without failure of the segment.

For compliance with IP66 protection, it is necessary to protect unused spur line connections using plugs.

Overview (continued)

Enhanced fieldbus diagnostics with AFDiSD in PROFIBUS PA

AFDiSD diagnostics are limited to short-circuits, loss of redundancy, detection of chatter, and failure of field devices. In addition, the extended fieldbus diagnostics, which can be activated per mode selector, enables comprehensive diagnostics of the entire PROFIBUS PA segment.

This includes, among others, the detection, recording and monitoring of:

- Topology (DP/PA coupler, AFDiSD)
- Voltage and currents on the main and spur lines
- Signal and noise levels
- Capacitive unbalance to shield of main line

Configuration errors or defects can thus be rapidly detected and eliminated.

However, a prerequisite for application of the extended fieldbus diagnostics is that all active field distributors of the segment as well as the components of the PA link support this functionality. The following components satisfy this requirement:

- Active Field Distributor AFDiSD, Article No. 6ES7655-5DX60-1BB0
- IM 153-2 High Feature Outdoor interface module, Article No. 6ES7153-2BA70-0XB0
- DP/PA coupler FDC 157, Article No. 6ES7157-0AC85-0XA0

The interface module creates a topology model of the connected bus segment, and maps its status information. The DP/PA coupler and the locally installed active field distributor AFDiSD provide the interface module with the physical data of the bus segment for this purpose, as well as information on the status of the connected lines. The information provided by the interface module can be displayed on the PCS 7 Maintenance Station and evaluated by SIMATIC PDM.

When delivered from the factory, the enhanced fieldbus diagnostics is not activated in the AFDiSD. In this state, the functionality of the AFDiSD is equivalent to that of the AFDiS predecessor type.

Active Field Splitter AFS

The active field splitter (AFS) connects a PA line segment with a redundant coupler pair in the PA router PA Link. The AFS interconnects the line segment with the respective active coupler.

The PA line segment can be connected to the AFS via one or two (center feed) identical Y-connectors out of a total of 4. For the center feed, the line segment is connected via the two Y-connectors (bus termination switch on both FDC 157 couplers set to "OFF").

For compliance with IP66 protection, it is necessary to close unused connections using sealing plugs.

AFS: Active Field Distributor for PROFIBUS PA

Technical specifications

Active Field Distributor AFD

General data	
Connection of field devices	• Standard-compliant field devices for PROFIBUS PA or FOUNDATION Fieldbus H1 • Max. 4 per AFD4/ AFD4 RAILMOUNT/AFD4 FM • Max. 8 per AFD8 • Max. 31 per fieldbus segment • Operating environment up to Zone 2 or 22; Class I Zone 2/ Division 2 Zone 2 (with AFD4 RAILMOUNT depending on enclosure used) • The max. current consumption of all fieldbus components of the PA field-bus segment is 1 A
Degree of protection	
• AFD4, AFD4 FM, AFD8	IP66
• AFD4 RAILMOUNT	Depending on enclosure used
Voltages, currents, potentials	
Power supply	Via bus, no auxiliary power necessary
Rated supply voltage, permissible range	16 to 32 V DC
Reverse polarity protection (together with FDC 157)	Yes
Overvoltage protection	No
Current consumption	
• Current consumption at idle	
- AFD4, AFD4 RAILMOUNT, AFD4 FM	24 mA
- AFD8	34 mA
• Current consumption with connected field devices	
- AFD4, AFD4 RAILMOUNT, AFD4 FM	24 mA + total current of all field devices
- AFD8	34 mA + total current of all field devices
• Additional current consumption of the AFD at end of line (an open main line connection)	30 mA
• Current consumption at max. power output per spur line	
- AFD4, AFD4 RAILMOUNT, AFD4 FM	264 mA
- AFD8	514 mA
Power loss	
• AFD4, AFD4 RAILMOUNT, AFD4 FM	Min. 384 mW; max. 3.2 W
• AFD8	min. 544 mW; max. 4.1 W
Grounding	Direct, via grounding rail
Electrical isolation between main line and spur lines	No
Connections, interfaces	
Main line	
Number of connections	2
Cable bushings	
• AFD4	Cable glands M16
• AFD4 RAILMOUNT	No cable glands/threaded plugs
• AFD4 FM	Terminal screws M20
• AFD8	Cable glands M16
Interfaces	PROFIBUS PA and FOUNDATION Fieldbus H1
Automatic bus terminator	Yes

Spur lines	
Number of connections	
• AFD4, AFD4 RAILMOUNT, AFD4 FM	4
• AFD8	8
Cable bushings	
• AFD4	Cable glands M16
• AFD4 RAILMOUNT	No cable glands/threaded plugs
• AFD4 FM	Terminal screws M16
• AFD8	Cable glands M16
Short-circuit proof	Yes
Intrinsically-safe acc. to FISCO	No
Current I_{max} (DC) on spur lines 1 to 4 (AFD4) or 1 to 8 (AFD8)	60 mA
Short-circuit current (test current)	6 mA
Debounce logic	Yes
No-load voltage	< 30 V
Current output to field devices	
• AFD4, AFD4 RAILMOUNT, AFD4 FM	Max. 240 mA
• AFD8	Max. 480 mA
Status, interrupts, diagnostics	
Status indicator	Yes
Diagnostics function	Yes
Diagnostics LED	Yes
Interrupts	No
Climatic conditions	
Permissible operating temperature	-40 to +70 °C
Permissible storage/transport tem-perature	-40 to +85 °C
Relative humidity during operation	Max. 95 %
Approvals for potentially explosive atmospheres	
• Gas	Zone 2 (AFD4 RAILMOUNT depending on enclosure used)
• Dust	Zone 22 (AFD4 RAILMOUNT depending on enclosure used)
Dimensions and weight	
Dimensions (W × H × D) in mm (without screwed glands)	
• AFD4, AFD4 RAILMOUNT, AFD4 FM	220 × 120 × 83
• AFD8	360 × 120 × 83
Weight	
• AFD4/AFD4 FM	2 000 g
• AFD4 RAILMOUNT	1 000 g
• AFD8	3 000 g
Approvals, standards	
AFD4, AFD4 RAILMOUNT and AFD8	
• CE	According to 94/9/EG (formerly ATEX 100a), 2004/108/EG and 2006/95/EG
• ATEX	II 3G Ex nA ic [ic] IIC T4 Gc II 3D Ex tc [ic] IIIC T80°C Dc IP66
• IECEx	IECEx DEK 12.0069X
• KCC	Korea Certification
• INMETRO	Ex nA [ic] IIC T4 Gc Ex tc [ic] IIIC T80 °C
AFD4 FM	
• cFMus	FM Class 3600, 3611, 3810, ANSI/ISA 60079-0/-31, ANSI/ISA 60529, ANSI/NEMA250

Technical specifications (continued)

AFDiSD active field distributor

General data	
Connection of field devices	• Standard-compliant field devices for PROFIBUS PA or FOUNDATION Fieldbus H1 • Max. 6 per AFDiSD • Max. 31 per fieldbus segment • Operating environment up to Zone 1 or 21; Class I Zone 1 • The max. current consumption of all fieldbus components of the PA field-bus segment is 1 A
Degree of protection	IP66
Voltages, currents, potentials	
Power supply	Via bus, no auxiliary power necessary
Rated supply voltage, permissible range	16 to 32 V DC
Reverse polarity protection	Yes
Overvoltage protection	No
Current consumption	
• At 28 V input voltage	≤ 64 mA + (0.838 × total current of all field devices)
• At 24 V input voltage	≤ 67 mA + (1.008 × total current of all field devices)
• At 20 V input voltage	≤ 74 mA + (1.246 × total current of all field devices)
Power loss	Min. 1.4 W; max. 5.9 W
Grounding	Direct, via connection bar
Electrical isolation between main line and spur lines	Yes
Test voltage	2550 V DC, 2 s
Connections, interfaces	
Main line	
Number of connections	2
Cable bushings	Cable glands M20
Interfaces	PROFIBUS PA and FOUNDATION Fieldbus H1
Automatic bus terminator	Yes
Spur lines	
Number of connections	6
Cable bushings	Cable glands M16
Short-circuit proof	Yes
Intrinsically-safe acc. to FISCO	Yes
Current I_{max}	
• on spur line S1	60 mA
• on spur lines S2 to S6	40 mA
• in total for all field devices	180 mA
Short-circuit current (test current)	5 mA
Debounce logic	Yes
No-load voltage	Max. 15.3 V
Current output to field devices	Max. 260 mA

Status, interrupts, diagnostics	
Status indicator	Yes
Diagnostics function	Yes
Diagnostics LED	Yes
Interrupts	No
Enhanced fieldbus diagnostics in PROFIBUS PA (can be activated optionally)	Yes
Climatic conditions	
Permissible operating temperature	-40 to +70 °C
Permissible storage/transport tem-perature	-40 to +85 °C
Relative humidity during operation	Max. 95 %
Approvals for potentially explosive atmospheres	
• Gas	Zone 1 and Zone 2 or Class I Zone 2/ Division 2 and Class I Zone 1
• Dust	Zone 21 and Zone 22
Dimensions and weight	
Dimensions (W × H × D) in mm, with screwed glands	380 × 170 × 85
Weight	4 500 g
Approvals, standards	
• CE	According to 94/9/EG (formerly ATEX 100a), 2004/108/EG and 2006/95/EG
• ATEX	Ex e ib mb [ia IIC Ga] [ia IIIC Da] IIC T4 Gb Ex nA ic [ia IIC Ga] [ia IIIC Da] IIC T4 Gc Ex t IIIC T80 °C Db IP66 KEMA 10 ATEX 0055
• IECEx	IECEx KEM 10.0026
• KCC	Korea Certification
• INMETRO	Ex e ib mb [ia IIC Ga] [ia IIIC Da] IIC T4 Gb Ex nA ic [ia IIC Ga] [ia IIIC Da] IIC T4 Gc Ex tb IIIC T80 °C IP66 (-40 … +70 °C)
• NEPSI	Ex e ib mb [ia IIC GA] [iaD] IIC T4 Gb; Ex nA ic [ia IIC Ga] [iaD] IIC T4 Gc; DIP A21 T80°C IP66
System requirements	
• SIMATIC PCS 7 system software	As of V8.1
• SIMATIC PDM	As of V8.2

Technical specifications (continued)

Active Field Splitter AFS

General data	
Connection of field devices	• 1 fieldbus segment with max. 31 field devices • Operating environment up to Zone 2 or 22; Class I Zone 2/ Division 2 • The max. current consumption of all fieldbus components of the PA fieldbus segment is 1 A
Degree of protection	IP66
Voltages, currents, potentials	
Power supply	Via bus, no auxiliary power necessary
Rated supply voltage, permissible range	16 to 32 V DC
Reverse polarity protection (together with FDC 157)	Yes
Overvoltage protection	No
Current consumption at idle	54 mA
Power loss	Min. 864 mW; max. 2.13 W
Output current for supplying all field devices of the fieldbus segment (for dimensioning the device configuration)	1 A
Grounding	Direct, via connecting bar
Connections, interfaces	
Main lines to the FDC 157 couplers	
Number of connections	2
Cable bushings	Cable glands M16
Automatic bus terminator	No
Maximum permissible continuous main line current	1 A
Y-connectors for fieldbus line segment	
Number of connections	1 or 2 (with center feed)
Cable bushings	Cable glands M16

Interfaces	PROFIBUS PA and FOUNDATION Fieldbus H1
Short-circuit proof (together with FDC 157)	Yes
Intrinsically-safe acc. to FISCO	No
Current I_{max} on Y (limited by FDC 157)	1 A
Debounce logic	No
Continuous output voltage	Max. 32 V
Current output to field devices	Max. 1 A
Status, interrupts, diagnostics	
Status indicator	Yes
Diagnostics function	Yes
Diagnostics LED	Yes
Interrupts	No
Climatic conditions	
Permissible operating temperature	-40 to +70 °C
Permissible storage/transport temperature	-40 to +85 °C
Relative humidity during operation	Max. 95 %
Approvals for potentially explosive atmospheres	
• Gas	Zone 2
• Dust	Zone 22
Dimensions and weight	
Dimensions (W × H × D) in mm (without screwed glands)	220 × 120 × 83
Weight	2 000 g
Approvals, standards	
• CE	According to 94/9/EG (formerly ATEX 100a), 2004/108/EG and 2006/95/EG
• ATEX	II 3G Ex nA IIC T4 Gc II 3D Ex tc IIIC T80°C Dc IP66
• IECEx	IECEx DEK 12.0069X
• KCC	Korea Certification

Ordering data

	Article No.
Active Field Distributor (AFD) For integration of standard-compliant PA or FF field devices	
4 short-circuit-proof spur line connections for 1 field device each	
• AFD4 with cable glands	**6ES7157-0AG81-0XA0**
• AFD4 RAILMOUNT (without enclosure) for mounting on a DIN mounting rail in a suitable enclosure	**6ES7655-5DX40-2AA0**
• AFD4 FM with threaded plugs; cFMus approvals for USA and Canada Note: Cable glands must be ordered separately!	**6ES7655-5DX40-1AA1**
8 short-circuit-proof spur line connections for 1 field device each	
• AFD8 with cable glands	**6ES7157-0AG82-0XA0**
AFDiSD (Active Field Distributor intrinsically Safe with optional extended PROFIBUS PA diagnostics) With 6 short-circuit proof spur line connections for the integration of standard-compliant intrinsically-safe PA or FF field devices	**6ES7655-5DX60-1BB0**

	Article No.
Active Field Splitter (AFS) For the interconnection of a bus line segment with the active coupler of a PA or FF gateway with redundant coupler pair	**6ES7157-0AG80-0XA0**
Accessories	
Sealing plugs For unused connections on the AFS, AFD and AFDiSD, 10 units	**6ES7157-0AG80-1XA1**
Additional components required for extended fieldbus diagnostics with AFDiSD	
IM 153-2 High Feature Outdoor Interface module for PROFIBUS DP for ET 200M, PA Link and Y-Link; redundancy capable; conformal coating, IP20 degree of protection; permissible operating temperature -25 ... +60 °C	**6ES7153-2BA70-0XB0**
DP/PA coupler FDC 157	**6ES7157-0AC85-0XA0**

Overview

The following cables in different colors are offered for setting up PROFIBUS PA networks in accordance with IEC 61158-2 (for detailed information, refer to the IK PI Catalog, Industry Mall, or CA 01 Offline Mall under Network components for PROFIBUS, Electrical networks (PROFIBUS PA)):

- PROFIBUS FC Process Cable, 2-wire, shielded, black sheath: for applications in non-intrinsically safe areas

- PROFIBUS FC Process Cable, 2-wire, shielded, blue sheath: for applications in intrinsically safe areas

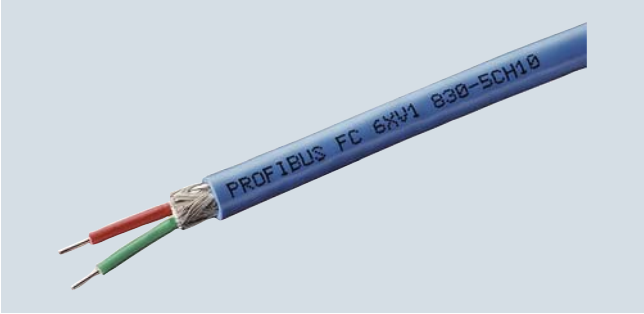

The FastConnect stripping tool can be used to strip the outer sheath and shield of the PROFIBUS FC Process Cables to the required lengths for PROFIBUS PA.

Design

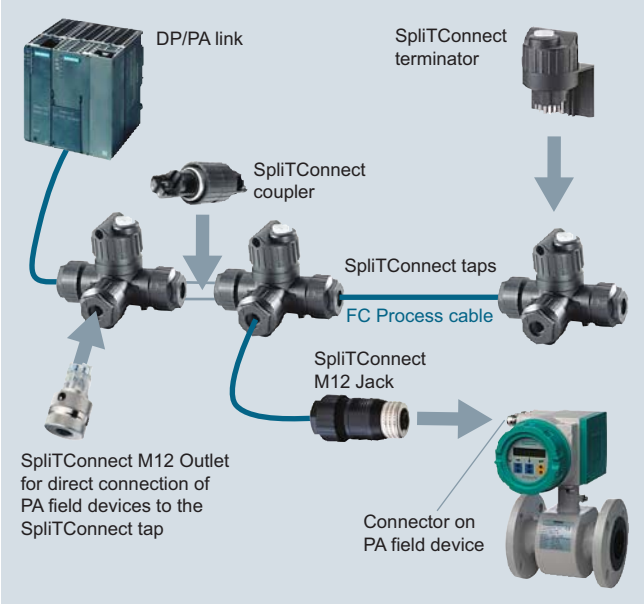

SpliTConnect

The SpliTConnect Tap enables the design of fieldbus segments according to IEC 61158-2 with field device connection points.

The SpliTConnect Coupler can be used to construct a PROFIBUS PA hub by connecting SpliTConnect Taps in series.

By replacing the contacting screw by the SpliTConnect Terminator, the SpliTConnect Tap can be used as a bus terminating element.

Terminal equipment can be connected directly through the FC Process Cable. Using the SpliTConnect M12 Outlet, PA field devices can also be connected to the SpliTConnect Tap by means of an M12 connection. The SpliTConnect M12 Jack is a connecting element between an FC Process Cable and an M12 connector on the PROFIBUS PA field device. For details on SpliTConnect network components, see Catalog IK PI.

Ordering data

	Article No.
PROFIBUS FC Process Cable 2-wire, shielded	
• Blue sheath color; for intrinsically safe applications	**6XV1830-5EH10**
• Black sheath color; for non-intrinsically safe applications	**6XV1830-5FH10**
Sold by the meter: max. length 1000 m, minimum order 20 m	
PROFIBUS FastConnect Stripping Tool Stripping tool for fast stripping of the PROFIBUS FastConnect bus cable	**6GK1905-6AA00**
PROFIBUS FastConnect Blade Cassettes Spare blade cassettes for PROFIBUS FastConnect Stripping Tool, 5 units	**6GK1905-6AB00**
SpliTConnect Tap for implementing PROFIBUS PA segments and attaching PA field devices, insulation displacement terminal, IP67, 10 units	**6GK1905-0AA00**

	Article No.
SpliTConnect M12 Outlet Element for direct attachment of PA field devices to the SpliTConnect Tap, 5 units	**6GK1905-0AB10**
SpliTConnect Coupler Connection element for cascading SpliTConnect Taps to create neutral points, 10 units	**6GK1905-0AC00**
SpliTConnect Terminator for connecting PROFIBUS PA segments, 5 units	
• Terminator (Ex); can be used in hazardous areas	**6GK1905-0AD00**
• Terminator (non-Ex); cannot be used in hazardous areas	**6GK1905-0AE00**
SpliTConnect M12 Jack Connecting element between an FC Process Cable and M12 connector on the PROFIBUS PA field device, 5 units	**6GK1905-0AF00**

Overview

Depending on operator preference, FOUNDATION Fieldbus (FF) H1 can be used in addition to PROFIBUS PA as the fieldbus for the direct connection of transmitters and actuators to the SIMATIC PCS 7 process control system.

Design

Examples of FOUNDATION Fieldbus H1 architectures

When FOUNDATION Fieldbus H1 is integrated in the SIMATIC PCS 7 process control system, PROFIBUS DP acts as a link. The following graphical representations show possible FOUNDATION Fieldbus H1 architectures with:

- PROFIBUS DP master in non-redundant design (AS Single Station)
- PROFIBUS DP master in redundant design (AS Redundancy Station)

Depending on the configured PROFIBUS DP master, the gateway between PROFIBUS DP and FOUNDATION Fieldbus H1 is formed by a single Compact FF Link (AS Single Station) or a redundant Compact FF Link pair (AS Redundancy Station) (for details, see graphics). One FF fieldbus segment can be operated on each gateway.

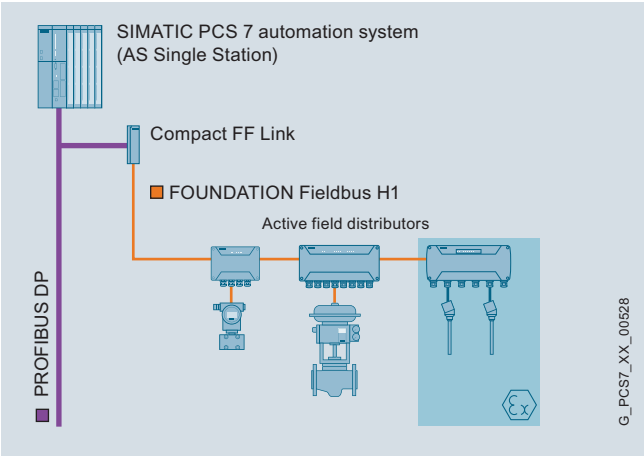

FOUNDATION Fieldbus H1 on an AS Single Station as PROFIBUS DP master

Line architecture with single Compact FF Link

A line segment can be connected to an individual PROFIBUS DP line via a Compact FF Link. The FF-field devices can be integrated into the line segment via AFD active field distributors, e.g. AFD4, AFD4 RAILMOUNT, AFD4 FM and AFD8 (approval for Ex zone 2/22) and AFDiSD (approval for Ex zone 1/21). The FF-field devices are connected to these field distributors using short-circuit-proof spur lines.

Alternatively, it is possible to operate up to 8 AFD field distributors, up to 5 AFDiSD field distributors or any combination of up to 5 AFDiSD and AFD field distributors in a line segment. The last field distributor at the end of the line farthest away from the Compact FF Link automatically activates its bus terminating resistor.

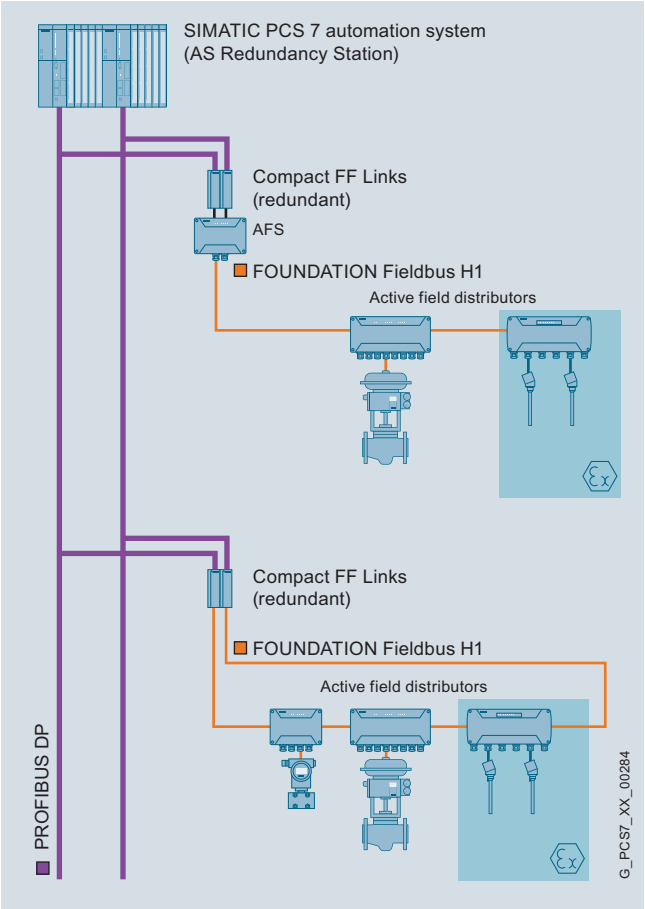

FOUNDATION Fieldbus H1 on an AS Redundancy Station as PROFIBUS DP master

Line architecture with redundant Compact FF Links

A line segment on the AFS active field distributor (Active Field Splitter) can be connected to a redundant PROFIBUS DP via a redundant Compact FF Link pair. The AFS connected to both Compact FF Links interconnects that line segment connected to it with the active Compact FF Link in each case. A Compact FF Link can be replaced without interrupting the ongoing operation.

The FF field devices are integrated in the line segment as described in the section "Line architecture with single Compact FF Link". The limits with respect to the number of field distributors are also identical (up to 8 AFD, up to 5 AFDiSD or any combination of up to 5 AFDiSD and AFD).

Ring architecture with redundant Compact FF Links

The highest availability can be achieved with a FOUNDATION Fieldbus H1 ring segment, which can be connected to a redundant PROFIBUS DP via a redundant Compact FF Link pair.

The FF field devices are integrated into the ring segment using the short-circuit-proof spur lines of the AFD or AFDiS active field distributors. The number of field distributors is limited as with the line architectures (up to 8 AFD, up to 5 AFDiS or any combination of up to 5 AFDiS and AFD).

The bus is terminated automatically and is imMediately adapted in the event of changes or faults on the bus. An extension on the fieldbus or replacement of a Compact FF Link during operation is possible.

Function

Properties of FOUNDATION Fieldbus H1

Like PROFIBUS PA, the FOUNDATION Fieldbus H1 is based on IEC 61158-2. With MBP (Manchester coded Bus Powered) transmission technology, digital data is transmitted and power is supplied to the bus nodes on a shielded two-wire cable. The constant transmission rate is 31.25 Kbps.

Up to 32 bus nodes (Compact FF Link + field devices) can be operated on one fieldbus segment (typically 8 to 12 devices). The field devices are integrated into the fieldbus segment via AFD (approval for Ex zone 2/22) or AFDiS (approval for Ex zone 1/21) active field distributors. Intrinsically-safe FF devices connected via AFDiS active field distributors can be installed in hazardous areas in accordance with Ex zone 1/21 or 0/20.

The total length of the fieldbus segment is restricted to 1 900 m. If AFDs (active field distributors) are used, both the length of the spur lines for connecting devices and the quality of the cable used must also be considered when calculating the total length of the bus segment. Spur lines on the AFDiSD are not relevant to the total length of the bus segment.

The spur lines can have the following maximum lengths:

- Up to 120 m in accordance with IEC 61158-2
- Up to 120 m in accordance with IEC 60079-27 (FISCO)

With AFD active field distributors, the maximum values are reduced if necessary, depending on the number of spur lines of the bus segment (for details, see the "Technical specifications" section). With AFDiSD active field distributors, this reduction is canceled by the integrated repeater function.

The **SIMATIC Fieldbus Calculator** provides help in calculating and designing fieldbus segments:
http://support.automation.siemens.com/WW/view/en/53842953

The FOUNDATION Fieldbus H1 combines cyclic and acyclic communication. Time-critical tasks such as the transfer of process data are executed cyclically according to an exact processing schedule. On the other hand, non-time-critical information such as maintenance/diagnostics data, configuration or configuration data is transferred acyclically.

Device management with EDD

The field device data for the following block types are distributed according to the block model:

- Device block (device-specific information)
- Function block (implemented functions)
- Transmission block (function for controlling input/output variables of a function block)

Fieldbus Foundation provides pre-defined device descriptions (standard DD) for the basic functions of specific field device types. The basic functions of the devices (e.g. analog input, digital output, etc.) are implemented by means of various standard function and transmission blocks.

The device descriptions are interpreted with SIMATIC PDM.

Control in the field

Function and transmission blocks can also be interconnected to form control loops. Together with suitable field devices, such a control application operates independent of the controller (automation system) of the control system.

Characteristic features at a glance

- Bus power supply to the field devices
- Topology: Line, tree, ring
- Integration of intrinsically safe field devices in hazardous areas with barriers
- Deterministic time response
- Interoperability due to standardized bus interface and device integration with standardized device descriptions
- Support of "Control in the field"

Integration

Integration in SIMATIC PCS 7

The FOUNDATION Fieldbus H1 can be integrated seamlessly in the SIMATIC PCS 7 process control system using PROFIBUS DP as link. The gateway between PROFIBUS DP and FOUNDATION Fieldbus H1 is realized with Compact FF Links. Either a single Compact FF Link or a redundant pair is used based on the selected bus architecture (see "Design" section).

Engineering of the FOUNDATION Fieldbus H1 segments is implemented as for PROFIBUS PA. Diagnostic information and configured maintenance information for Compact FF Links and FF devices are available via the SIMATIC PCS 7 Maintenance Station. SIMATIC PCS 7 generates the diagnostics screens automatically.

System requirements

- System software SIMATIC PCS 7 V8.1+ SP1 or higher
- SIMATIC PDM V8.2+SP1 or higher with SIMATIC PDM Communication FOUNDATION Fieldbus

Technical specifications

FOUNDATION Fieldbus H1	
Data transmission	MBP
Transmission rate	31.25 Kbps
Cable	2-wire shielded
Topology	Line, tree, ring
FF devices per segment/FF Link	31
Active field distributors per segment/FF Link • AFD • AFDiSD or combinations of AFDiSD and AFD	 8 5
Max. total current consumption of all FF field devices	0.5 A
Cable length per segment	1 900 m
Bus segments with AFD	
Max. spur line length related to the total number of spur lines	
Number of spur lines (1 device per spur line) • 1 to 12 spur lines • 13 to 14 spur lines • 15 to 18 spur lines • 19 to 24 spur lines • 25 to 31 spur lines	 120 m 90 m 60 m 30 m 1 m
Bus segments with AFDiSD	
Max. spur line length independent of total number of spur lines	
Number of spur lines (1 device per spur line) • 1 to 31 spur lines - Not intrinsically-safe - Intrinsically-safe acc. to FISCO	 120 m 120 m

Overview

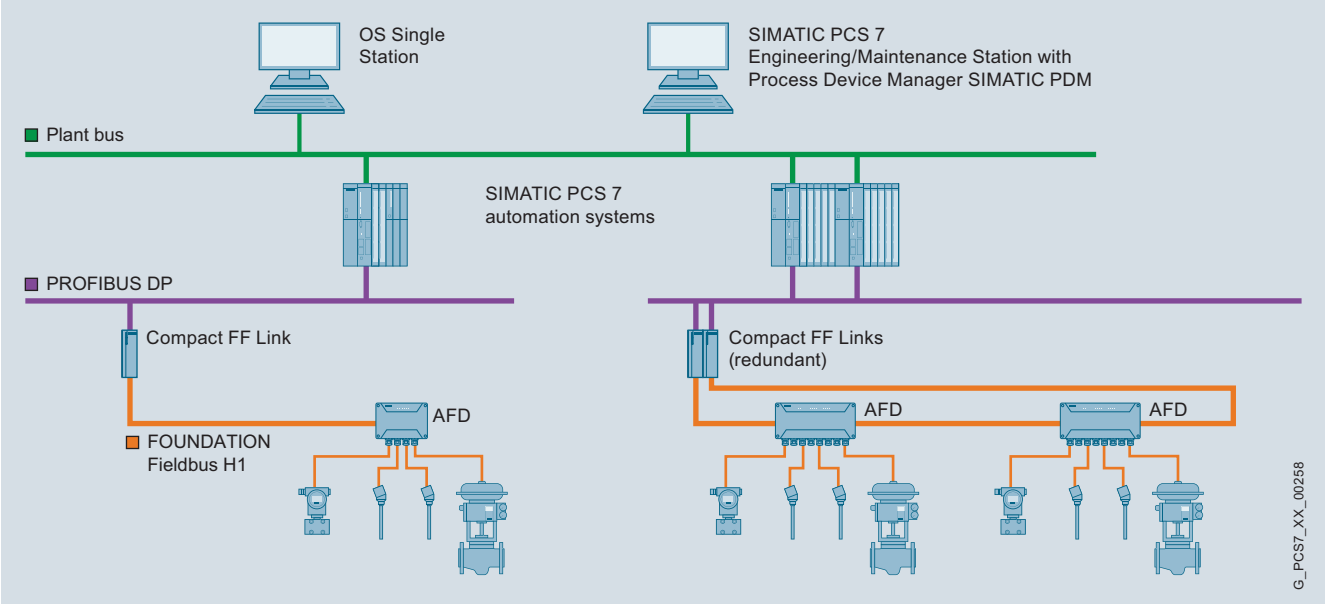

Examples of DP/FF gateways with Compact FF Link

A gateway based on the Compact FF Link between PROFIBUS DP and FOUNDATION Fieldbus H1 (FF) enables integration of a fieldbus segment with up to 31 standard-compliant FF-H1 field devices in the SIMATIC PCS 7 process control system. If the PROFIBUS DP master and PROFIBUS DP are implemented without redundancy, the gateway can be realized with a single Compact FF Link. With redundant implementation of the PROFIBUS DP maser and PROFIBUS DP, a redundant Compact FF Link pair is required for the gateway.

The Compact FF Link is simultaneously a slave on PROFIBUS DP and the master on FOUNDATION Fieldbus H1. It decouples the hardware, communication protocols, and time response of the two bus systems.

A PROFIBUS address from 1 to 125 must be assigned for the Compact FF Link. In the case of redundant architecture, identical PROFIBUS addresses must be set for both Compact FF Links.

As the FF Link master, the Compact FF Link controls the distributed communication of the FOUNDATION Fieldbus H1 segment deterministically using LAS (Link Active Scheduler). If the Compact FF Link fails, a redundant partner module or a field device with the "Backup Link Master" property takes over the communication control. FF field devices in an FF segment are thus able to execute closed-loop control functions (Control in the Field) even independent of the higher-level controller.

Design

Compact FF Link

The Compact FF Link is a S7-300 format device, consisting of a PROFIBUS DP interface (DPV1 slave) and a field device coupler for a subordinate FF bus segment. It can operated individually or redundantly in a pair.

The following architectures are thus possible (also refer to "FOUNDATION Fieldbus H1" section under "Design"):

- Single PROFIBUS DP interface (1 × Compact FF Link)
  - Line architecture with single Compact FF Link
- Redundant PROFIBUS DP interface (2 × Compact FF Link)
  - Line architecture with redundant Compact FF Link pair and AFS active field distributor
  - Ring architecture with redundant Compact FF Link pair (link and Media redundancy)

Design (continued)

Compact FF Link in non-redundant operation

If the FF segment is connected to PROFIBUS DP via a single Compact FF Link, the Compact FF Link can be mounted directly on a standard mounting rail.

If the 24 V DC incoming supply is not from a central power supply of the plant, a PS 307 or PS 305 load power supply can be used.

Compact FF Links in redundant operation

In a redundant configuration, the BM Compact FF Link bus module is first mounted on a mounting rail for "hot swapping". The two redundant Compact FF Links are then inserted. This enables a Compact FF Link to be replaced during operation.

In the case of a redundant Compact FF Link pair, a redundant 24 V DC supply is also recommended, e.g. with two PS 307/ PS 305 load power supplies.

Technical specifications

Compact FF Link	
Design and equipment features	
Function	Bus link of PROFIBUS DP (slave functionality) and FOUNDATION Fieldbus H1 (link master functionality) with support of the "Configuration in Run" functionality
Installation type/mounting	Front mounting, preferably on mounting rail
Degree of protection according to EN 60529	IP20
Voltages, currents, potentials	
Rated supply voltage	24 V DC (20.4 V ... 28.8 V)
Input current, max. current consumption	1.3 A
External fusing of power supply lines (recommended)	min. 4 A
Rated output voltage for FF H1	31 V DC ± 1 V
• Overvoltage monitoring	U > 35 V; latching shutdown
• Voltage failure bridging	5 ms
Output current for FF H1 (for supply of all FF field devices)	0.5 A
Power loss	8 W
Galvanic isolation	
• FF H1 to PROFIBUS DP	Yes
• DP master system to FF H1	Yes
• FF H1/24 VDC supply/ PROFIBUS DP	Yes
• All electric circuits/functional grounding	Yes
Frame length	
• Input/output data	244 bytes/244 bytes
• Configuration frame	Max. 244 bytes
• Diagnostics frame	Max. 244 bytes
• Parameter assignment frame	Max. 244 bytes
Interfaces	
Interface hardware	RS 485 - yes; FOC - no
PROFIBUS DP	
• Permissible device addresses	1 to 125
• Transmission rate (automatic detection)	max. 12 Mbps
• Bus protocol/transmission protocol	PROFIBUS DP
• Transmission mode	RS 485
• Connection	9-pin Sub-D plug
FOUNDATION Fieldbus H1	
• Transmission rate	31.25 Kbps
• Bus protocol/transmission protocol	FOUNDATION Fieldbus H1
• Transmission mode	MBP
• Connection	2-pin screw terminal

Status, interrupts, diagnostics	
Status displays	
• Group error	Red LED "SF"
• Bus error on higher level DP master system	Red "BF DP" LED
• Bus error on subordinate FF H1	Red "BF FF" LED
• Active PROFIBUS DP channel	Yellow "ACT DP" LED
• Active FF H1 channel	Yellow "ACT FF" LED
• 24 V DC power supply monitoring	Green "ON" LED
Climatic conditions	
Ambient temperature in operation	
• Horizontal installation	-40 to +70 °C
• Vertical installation	-40 to +50 °C
Permissible storage/transport temperature	-40 to +85 °C
Relative humidity during operation	max. 95%, without condensation
Approvals for potentially explosive atmospheres	
• Gas	ATEX II 3 G Ex nA II T4
• Dust	No
• Equipment Ex ia/Ex ib	No/No
Standards, specifications, approvals	
CE mark according to 2004/108/EC, 94/9/EC	Yes
UL approval	Yes
RCM (formerly C-Tick)	Yes
KC certification	Yes
EAC (formerly Gost-R)	Yes
PROFIBUS standard	IEC 61784-1 CP 3/1
FOUNDATION Fieldbus guideline	IEC 61158-2
Dimensions and weight	
Dimensions (W × H × D) in mm	40 × 125 × 130
Weight	approx. 350 g

Ordering data

	Article No.
Compact FF Link DP/FF gateway, 40 mm wide, FOUNDATION Fieldbus link master, with redundancy capability; physical interface to the FOUNDATION Fieldbus H1 with integrated bus power supply up to 0.5 A and integrated diagnostics; degree of protection IP20; for extended temperature range, permissible operating temperature -40 to +70 °C	**6ES7655-5BA00-0AB0**
Accessories	
PS 307 load power supply Including connecting comb; 120/230 V AC; 24 V DC	
• 2 A; 40 mm wide	**6ES7307-1BA01-0AA0**
• 5 A; 60 mm wide	**6ES7307-1EA01-0AA0**
• 5 A, extended temperature range; 80 mm wide	**6ES7307-1EA80-0AA0**
• 10 A, 80 mm wide	**6ES7307-1KA02-0AA0**
PS 305 load power supply 24/48/60/110 V DC; 24 V DC	
• 2 A, extended temperature range; 80 mm wide	**6ES7305-1BA80-0AA0**

	Article No.
Components for stand-alone operation	
Standard profile rails (without hot swapping function)	
• 482 mm wide (19 inches)	**6ES7390-1AE80-0AA0**
• 530 mm wide	**6ES7390-1AF30-0AA0**
Components for redundant operation	
BM Compact FF Link Bus module for 2 Compact FF Links; for redundant operation	**6ES7655-5EF00-0AA0**
Mounting rail for hot swapping	
• 482 mm wide (19 inches)	**6ES7195-1GA00-0XA0**
• 530 mm wide	**6ES7195-1GF30-0XA0**
• 620 mm wide	**6ES7195-1GG30-0XA0**
• 2 000 mm wide	**6ES7195-1GC00-0XA0**
Covers 4 backplane bus covers and 1 cover for active bus module	**6ES7195-1JA00-0XA0**

Overview

Active Field Distributor AFD4

Active Field Distributor AFD4 RAILMOUNT

Active Field Distributor AFD8

Active Field Distributor AFD

Active field distributors (AFD) can be operated in environments in accordance with Division 2, Zone 2 or Zone 22. It is offered with the following models:

- AFD4, AFD4 RAILMOUNT or AFD4 FM with 4 spur line connections for 1 field device each
- AFD8 with 8 spur line connections for 1 field device each

An AFD4/AFD4 RAILMOUNT/AFD4 FM can therefore integrate up to 4, and an AFD8 up to 8 standard-compliant FF (FOUNDATION Fieldbus H1) field devices via short-circuit proof spur line connections to a fieldbus segment (line/ring) with automatic bus termination.

The FF fieldbus segment can be connected to a single or redundant PROFIBUS DP via an FF gateway and can thus be seamlessly integrated into the SIMATIC PCS 7 process control system.

Up to 8 active field distributors AFD with a total of up to 31 connected field devices can be operated for each fieldbus segment. The number of field devices is also limited by the current consumption of the field devices. A maximum of 60 mA per spur line and a maximum of 0.5 A per segment is available for the field devices.

An AFD in a ring segment can be replaced during operation without resulting in failure of the segment.

For compliance with IP66 protection, it is necessary to protect unused spur line connections using plugs.

Based on the AFD4, two product versions with different intentions were developed with the AFD4 RAILMOUNT and the AFD4 FM:

Specific product features of the AFD4 RAILMOUNT

The AFD4 RAILMOUNT is supplied without die-cast aluminum enclosure; it is a product model of the AFD4 active field distributor with flexible installation options. It can be installed on a DIN mounting rail into an enclosure of choice, for example, an enclosure made of stainless steel, die-cast aluminum or plastics.

Specific product features of the AFD4 FM

The AFD4 FM with cFMus approval is adapted to the special requirements for product models of the AFD4 active field distributor in the USA and Canada. The AFD4 FM features threaded plugs ex factory, because the cable glands of the AFD4 do not conform to the requirements of cFMus.

The threaded plugs for connecting the main and spur lines must be replaced by the cable glands and cables listed by UL or CSA. This must conform to the US National Electrical Code (NEC) and Canadian Electrical Code (CEC). The user is responsible for the selection and ordering.

Available suppliers for suitable cable glands:

- Cooper Capri SAS
- CMP products

Due to the larger bushing for the main line (M20 instead of M16), sheathed main line cables can also be used for AFD4 FM.

The relevant requirements of the US National Electrical Code (ANSI/NFPA-70 NEC) must be met for the installation of the AFD4 FM.

Overview (continued)

AFDiSD active field distributor

AFDiSD active field distributor

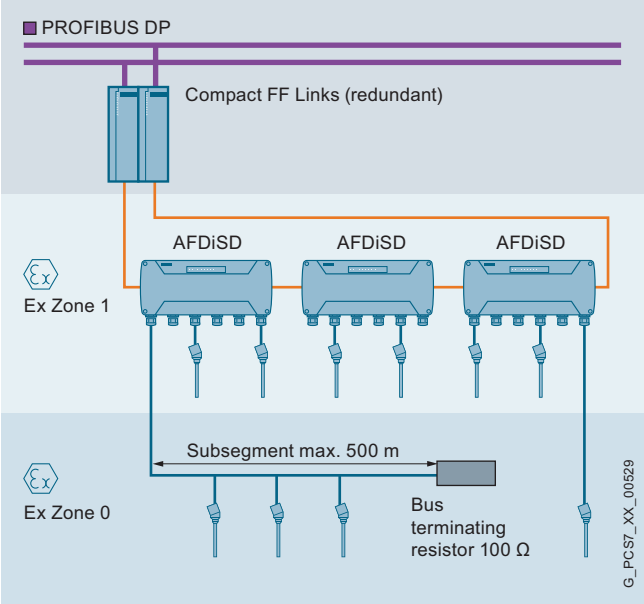

The AFDiS (Active Field Distributor intrinsically Safe) is an active field distributor for operating environments in accordance with Ex zones 1/21 and 2/22. It can integrate up to 6 intrinsically-safe FF field devices into an FF fieldbus segment (line/ring) via its intrinsically-safe, short-circuit-proof spur line connections. Instead of the spur line, it is also possible to use a subsegment for 3 to 4 devices with a max. length of 500 m at connection S1 of the AFDiS. The spur lines with Ex [ia] type of protection as well as the subsegment can be routed into Zone 0/20.

Up to 5 AFDiS field distributors with a total of up to 31 field devices can be operated in a fieldbus segment. The limitation to 5 field distributors is also mandatory for mixed operation of AFD and AFDiS.

The number of field devices per segment additionally depends on the current consumption of the devices. A current of 0.5 A is available for all field devices of the segment.

With the integrated repeater function, the AFDiS has the following advantages compared to the AFD:

- Spur line lengths are independent of the total number of spur lines in the bus segment.
- Spur line lengths need not be be taken into account when determining the total length of the bus segment.

In environments in accordance with Ex zone 2/22 or in non-hazardous areas, an AFDiSD in a ring segment can be replaced during operation without failure of the segment.

For compliance with IP66 protection, it is necessary to protect unused spur line connections using plugs.

Active Field Splitter AFS

The AFS active field distributor (Active Field Splitter) connects an FF line segment with a redundant Compact FF Link pair. The AFS interconnects the FF line segment with the active Compact FF Link in each case.

The FF line segment can be connected to the AFS via one or two (center infeed) out of a total of 4 identical Y-connectors. In the case of the center infeed, the line segment is looped through via the two Y-connectors.

For compliance with IP66 protection, it is necessary to protect unused connections using plugs.

AFS: Active Field Distributor for FOUNDATION Fieldbus H1

Technical specifications

Active Field Distributors AFD4

General data	
Connection of field devices	• Standard-compliant field devices for PROFIBUS PA or FOUNDATION Fieldbus H1 • Max. 4 per AFD4/ AFD4 RAILMOUNT/AFD4 FM • Max. 8 per AFD8 • Max. 31 per fieldbus segment • Operating environment up to Zone 2 or 22; Class I Zone 2/ Division 2 (with AFD4 RAILMOUNT depending on enclosure used) • The max. current consumption of all fieldbus components of the FF fieldbus segment is 0.5 A
Degree of protection	
• AFD4, AFD4 FM, AFD8	IP66
• AFD4 RAILMOUNT	Depending on enclosure used
Voltages, currents, potentials	
Power supply	Via bus, no auxiliary power necessary
Rated supply voltage, permissible range	16 to 32 V DC
Reverse polarity protection (together with FDC 157)	Yes
Overvoltage protection	No
Current consumption	
• Current consumption at idle	
- AFD4, AFD4 RAILMOUNT, AFD4 FM	24 mA
- AFD8	34 mA
• Current consumption with connected field devices	
- AFD4, AFD4 RAILMOUNT, AFD4 FM	24 mA + total current of all field devices
- AFD8	34 mA + total current of all field devices
• Additional current consumption of the AFD at end of line (an open main line connection)	30 mA
• Current consumption at max. power output per spur line	
- AFD4, AFD4 RAILMOUNT, AFD4 FM	264 mA
- AFD8	514 mA
Power loss	
• AFD4, AFD4 RAILMOUNT, AFD4 FM	Min. 384 mW; max. 3.2 W
• AFD8	min. 544 mW; max. 4.1 W
Grounding	Direct, via grounding rail
Electrical isolation between main line and spur lines	No
Connections, interfaces	
Main line	
Number of connections	2
Cable bushings	
• AFD4	Cable glands M16
• AFD4 RAILMOUNT	No cable glands/threaded plugs
• AFD4 FM	Terminal screws M20
• AFD8	Cable glands M16
Interfaces	PROFIBUS PA and FOUNDATION Fieldbus H1
Automatic bus terminator	Yes

Spur lines	
Number of connections	
• AFD4, AFD4 RAILMOUNT, AFD4 FM	4
• AFD8	8
Cable bushings	
• AFD4	Cable glands M16
• AFD4 RAILMOUNT	No cable glands/threaded plugs
• AFD4 FM	Terminal screws M16
• AFD8	Cable glands M16
Short-circuit proof	Yes
Intrinsically-safe acc. to FISCO	No
Current I_{max} (DC) on spur lines 1 to 4 (AFD4) or 1 to 8 (AFD8)	60 mA
Short-circuit current (test current)	6 mA
Debounce logic	Yes
No-load voltage	< 30 V
Current output to field devices	
• AFD4, AFD4 RAILMOUNT, AFD4 FM	Max. 240 mA
• AFD8	Max. 480 mA
Status, interrupts, diagnostics	
Status indicator	Yes
Diagnostics function	Yes
Diagnostics LED	Yes
Interrupts	No
Climatic conditions	
Permissible operating temperature	-40 to +70 °C
Permissible storage/transport temperature	-40 to +85 °C
Relative humidity during operation	Max. 95 %
Approvals for potentially explosive atmospheres	
• Gas	Zone 2 (AFD4 RAILMOUNT depending on enclosure used)
• Dust	Zone 22 (AFD4 RAILMOUNT depending on enclosure used)
Dimensions and weight	
Dimensions (W × H × D) in mm (without screwed glands)	
• AFD4, AFD4 RAILMOUNT, AFD4 FM	220 × 120 × 83
• AFD8	360 × 120 × 83
Weight	
• AFD4/AFD4 FM	2 000 g
• AFD4 RAILMOUNT	1 000 g
• AFD8	3 000 g
Approvals, standards	
AFD4, AFD4 RAILMOUNT and AFD8	
• CE	According to 94/9/EG (formerly ATEX 100a), 2004/108/EG and 2006/95/EG
• ATEX	II 3G Ex nA ic [ic] IIC T4 Gc II 3D Ex tc [ic] IIIC T80°C Dc IP66
• IECEx	IECEx DEK 12.0069X
• KCC	Korea Certification
• INMETRO	Ex nA [ic] IIC T4 Gc Ex tc [ic] IIIC T80 °C
AFD4 FM	
• cFMus	FM Class 3600, 3611, 3810, ANSI/ISA 60079-0/-31, ANSI/ISA 60529, ANSI/ NEMA250

Technical specifications (continued)

AFDiSD active field distributor

General data	
Connection of field devices	• Standard-compliant field devices for PROFIBUS PA or FOUNDATION Fieldbus H1 • Max. 6 per AFDiSD • Max. 31 per fieldbus segment • Operating environment up to Zone 1 or 21; Class I Zone 1 • The max. current consumption of all fieldbus components of the FF fieldbus segment is 0.5 A
Degree of protection	IP66
Voltages, currents, potentials	
Power supply	Via bus, no auxiliary power necessary
Rated supply voltage, permissible range	16 to 32 V DC
Reverse polarity protection	Yes
Overvoltage protection	No
Current consumption • At 28 V input voltage • At 24 V input voltage • At 20 V input voltage	 ≤ 64 mA + (0.838 × total current of all field devices) ≤ 67 mA + (1.008 × total current of all field devices) ≤ 74 mA + (1.246 × total current of all field devices)
Power loss	Min. 1.4 W; max. 5.9 W
Grounding	Direct, via connection bar
Electrical isolation between main line and spur lines	Yes
Test voltage	2550 V DC, 2 s
Connections, interfaces	
Main line	
Number of connections	2
Cable bushings	Cable glands M20
Interfaces	PROFIBUS PA and FOUNDATION Fieldbus H1
Automatic bus terminator	Yes
Spur lines	
Number of connections	6
Cable bushings	Cable glands M16
Short-circuit proof	Yes
Intrinsically-safe acc. to FISCO	Yes
Current I_{max} • on spur line S1 • on spur lines S2 to S6 • in total for all field devices	 60 mA 40 mA 180 mA
Short-circuit current (test current)	5 mA
Debounce logic	Yes
No-load voltage	Max. 15.3 V
Current output to field devices	Max. 260 mA

Status, interrupts, diagnostics	
Status indicator	Yes
Diagnostics function	Yes
Diagnostics LED	Yes
Interrupts	No
Enhanced fieldbus diagnostics in PROFIBUS PA (can be activated optionally)	Yes
Climatic conditions	
Permissible operating temperature	-40 to +70 °C
Permissible storage/transport temperature	-40 to +85 °C
Relative humidity during operation	Max. 95 %
Approvals for potentially explosive atmospheres • Gas • Dust	 Zone 1 and Zone 2 or Class I Zone 2/ Division 2 and Class I Zone 1 Zone 21 and Zone 22
Dimensions and weight	
Dimensions (W × H × D) in mm	380 × 170 × 85
Weight	4 500 g
Approvals, standards	
• CE	According to 94/9/EG (formerly ATEX 100a), 2004/108/EG and 2006/95/EG
• ATEX	Ex e ib mb [ia IIC Ga] [ia IIIC Da] IIC T4 Gb Ex nA ic [ia IIC Ga] [ia IIIC Da] IIC T4 Gc Ex t IIIC T80 °C Db IP66 KEMA 10 ATEX 0055
• IECEx	IECEx KEM 10.0026
• KCC	Korea Certification
• INMETRO	Ex e ib mb [ia IIC Ga] [ia IIIC Da] IIC T4 Gb Ex nA ic [ia IIC Ga] [ia IIIC Da] IIC T4 Gc Ex tb IIIC T80 °C IP66 (-40 to +70 °C)
• NEPSI	Ex e ib mb [ia IIC GA] [iaD] IIC T4 Gb; Ex nA ic [ia IIC Ga] [iaD] IIC T4 Gc; DIP A21 T80°C IP66
System requirements	
• SIMATIC PCS 7 system software	As of V8.1
• SIMATIC PDM	As of V8.2

Technical specifications (continued)

Active Field Splitter AFS

General data	
Connection of field devices	• 1 fieldbus segment with max. 31 field devices • Operating environment up to Zone 2 or 22; Class I Zone 2/ Division 2 • The max. current consumption of all fieldbus components of the FF fieldbus segment is 0.5 A
Degree of protection	IP66
Voltages, currents, potentials	
Power supply	Via bus, no auxiliary power necessary
Rated supply voltage, permissible range	16 to 32 V DC
Reverse polarity protection (together with FDC 157)	Yes
Overvoltage protection	No
Current consumption at idle	54 mA
Power loss	Min. 864 mW; max. 2.13 W
Output current for supplying all field devices of the fieldbus segment (for dimensioning the device configuration)	1 A
Grounding	Direct, via connecting bar
Connections, interfaces	
Main cables	
Number of connections	2
Cable bushings	Cable glands M16
Automatic bus terminator	No
Maximum permissible continuous main line current	1 A
Y-connectors for fieldbus line segment	
Number of connections	1 or 2 (with center feed)
Cable bushings	Cable glands M16

Interfaces	PROFIBUS PA and FOUNDATION Fieldbus H1
Short-circuit proof	Yes
Intrinsically-safe acc. to FISCO	No
Current I_{max} on Y (limited by Compact FF Link)	0.5 A
Debounce logic	No
Continuous output voltage	Max. 32 V
Current output to field devices	Max. 0.5 A
Status, interrupts, diagnostics	
Status indicator	Yes
Diagnostics function	Yes
Diagnostics LED	Yes
Interrupts	No
Climatic conditions	
Permissible operating temperature	-40 to +70 °C
Permissible storage/transport temperature	-40 to +85 °C
Relative humidity during operation	Max. 95 %
Approvals for potentially explosive atmospheres	
• Gas	Zone 2
• Dust	Zone 22
Dimensions and weight	
Dimensions (W × H × D) in mm (without screwed glands)	220 × 120 × 83
Weight	2 000 g
Approvals, standards	
• CE	According to 94/9/EG (formerly ATEX 100a), 2004/108/EG and 2006/95/EG
• ATEX	II 3G Ex nA IIC T4 Gc II 3D Ex tc IIIC T80°C Dc IP66
• IECEx	IECEx DEK 12.0069X
• KCC	Korea Certification

Ordering data

	Article No.
Active Field Distributor (AFD) For integration of standard-compliant PA or FF field devices	
4 short-circuit-proof spur line connections for 1 field device each	
• AFD4 with cable glands	**6ES7157-0AG81-0XA0**
• AFD4 RAILMOUNT (without enclosure) for mounting on a DIN mounting rail in a suitable enclosure	**6ES7655-5DX40-2AA0**
• AFD4 FM with threaded plugs; cFMus approvals for USA and Canada Note: Cable glands must be ordered separately!	**6ES7655-5DX40-1AA1**
8 short-circuit-proof spur line connections for 1 field device each	
• AFD8 with cable glands	**6ES7157-0AG82-0XA0**

	Article No.
AFDiSD (Active Field Distributor intrinsically Safe with optional extended PROFIBUS PA diagnostics) with 6 short-circuit proof spur line connections for the integration of standard-compliant intrinsically-safe PA or FF field devices	**6ES7655-5DX60-1BB0**
Active Field Splitter (AFS) For the interconnection of a bus line segment with the active coupler of a PA or FF gateway with redundant coupler pair	**6ES7157-0AG80-0XA0**
Accessories	
Sealing plugs For unused connections on the AFS, AFD and AFDiSD, 10 units	**6ES7157-0AG80-1XA1**

Overview

Depending on the field of application, cables in different colors are offered for setting up FOUNDATION Fieldbus H1 networks in accordance with IEC 61158-2:

- FOUNDATION Fieldbus Cable, 2-wire, shielded, yellow sheath:
  for applications in a non-intrinsically safe area

- FOUNDATION Fieldbus Cable, 2-wire, shielded, blue sheath:
  for applications in an intrinsically safe area

Ordering data

	Article No.
FOUNDATION Fieldbus Cable Bus cable according to IEC 61158-2, 2-wire, shielded; stranded filler wires	
• Yellow sheath color; for non-intrinsically safe applications	**6XV1830-5HH10**
• Blue sheath color; for intrinsically safe applications	**6XV1830-5GH10**
Sold by the meter: max. length 1000 m, minimum order 20 m	

Overview

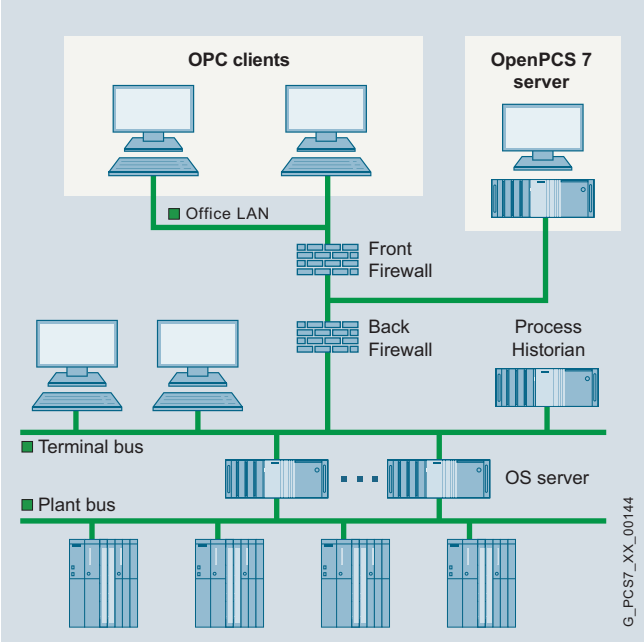

Use the OpenPCS 7 interface to directly integrate the SIMATIC PCS 7 process control system into host systems for production planning, process data evaluation and management. These higher-level systems (OPC clients) can access SIMATIC PCS 7 process data by means of the OpenPCS 7 server. However, access to the SIMATIC BATCH data is not possible.

The OpenPCS 7 server collects data for the OPC clients. Depending on the system configuration, these data may be distributed across different SIMATIC PCS 7 stations (OS server, central archive server). It covers the distribution of data with respect to

- time period (OS1/OS2/…)
- location (OS1/OS2/...)
- redundancy (OS1 master/OS1 standby …)

Design

The OpenPCS 7 server can be operated in two different configurations:

- Autonomous OpenPCS 7 server based on a SIMATIC PCS 7 Industrial Workstation in the client version (recommended preferred configuration)
- Multi-functional SIMATIC PCS 7 Industrial Workstation, client version, with OpenPCS 7 server and OS client functionalities (OpenPCS 7 server/OS client)

Function

The OpenPCS 7 interface is based on various OPC specifications (openness, productivity, collaboration). In addition to Microsoft's DCOM technology (Distributed Component Object Model), it also supports the more sophisticated OPC UA (Unified Architecture) protocol for communication between applications.

Special features of OPC UA:

- Data transfer combined with machine-readable semantic data description
- Platform independence
- Access via firewalls and over the Internet
- Communication reliability
- Security implementation

Access facilities of OPC clients

OPC DA/OPC UA DA (data access server)

For read and write access to process values

As an OPC DA or OPC UA DA server, the OpenPCS 7 server provides other applications with current data from the OS data management. The OPC client can log itself onto ongoing changes and also write values.

OPC HDA (historical data access server)

For read access to archived process values

As an OPC HDA server, the OpenPCS 7 server provides other applications with historical data from the OS archive system. The OPC client, e.g. a reporting tool, can specifically request the required data by defining the start and end of a time interval. Numerous aggregate functions, e.g. variance, mean value or integral, already permit preprocessing by the HDA server and thus contribute toward reduction of the communications load.

OPC A&E (alarm & events server)

For read access to messages, alarms and events

As an OPC A&E server, the OpenPCS 7 server passes on OS messages together with all accompanying process values to the subscribers at the production and corporate management levels. They can of course also be acknowledged there. Filter mechanisms and subscriptions ensure that only selected, modified data are transmitted.

OPC "H" A&E (Historical Alarm & Events Server)

For read access to archived alarms and messages

Thanks to a Siemens extension of the OPC standard interface, the OpenPCS 7 server is able to transmit historic alarms and messages from the archive to subscribers in the production control and corporate control level.

OLE-DB

Simple, standardized direct access to the archive data in the Microsoft SQL server database of the operator system is possible with the OLE-DB. It makes all OS archive data accessible with the accompanying process values, message and user texts.

Ordering data

	Article No.
Multi-functional OpenPCS 7 Server/OS Client	
SIMATIC PCS 7 OpenPCS 7/ OS Client V8.2 OpenPCS 7 software for expansion of an existing OS client with OpenPCS 7 server functionality 6 languages (English, German, French, Italian, Spanish, Chinese), software class A, runs with Windows 7 Ultimate 32/64-bit; single license for 1 installation No SIMATIC PCS 7 Software Media Package	
• Physical delivery License key on USB flash drive, certificate of license	**6ES7658-0GX28-2YB0**
• Online delivery License key download, online certificate of license Note: E-mail address required!	**6ES7658-0GX28-2YH0**

	Article No.
Autonomous OpenPCS 7 server	
SIMATIC PCS 7 OpenPCS 7 V8.2 OpenPCS 7 software for a separate OpenPCS 7 server, based on the hardware of the SIMATIC PCS 7 Workstation, client version 6 languages (English, German, French, Italian, Spanish, Chinese), software class A, runs with Windows 7 Ultimate 32/64-bit; single license for 1 installation No SIMATIC PCS 7 Software Media Package	
• Physical delivery License key on USB flash drive, certificate of license	**6ES7658-0HX28-2YB0**
• Online delivery License key download, online certificate of license Note: E-mail address required!	**6ES7658-0HX28-2YH0**

More information

To ensure safe operation of the plant, you need to take suitable security measures that also include IT security (e.g. network segmentation). For more information on the topic of industrial security, go to:
www.siemens.com/industrial-security

Overview

The actuator/sensor interface (AS-Interface) is a heterogeneous bus system for networking simple, usually binary actuators and sensors at the lowest field level. It is then possible to replace a cable harness with parallel wiring by a simple two-wire cable for simultaneous transmission of data and power.

The AS interface operates according to the master/slave principle. The AS-i master module (DP/AS-i Link Advanced, CP 343-2, CP 343-2P or IE/AS-i LINK PN IO) controls the slaves (sensors/actuators) connected per AS-i cable. Up to 62 AS-Interface slaves can be operated on an AS-Interface master module.

Note:

AS-Interface is integrated as a *subordinate*bus in SIMATIC PCS 7. For further information on the AS-Interface, see Catalogs IK PI and IC 10.

Design

IE/AS-i LINK PN IO (single master and double master)

The AS-Interface can be integrated into the SIMATIC PCS 7 process control system as follows:

- Direct connection on the PROFIBUS DP via DP/AS-i LINK Advanced (AS-i single or double master)
- Connection via a CP 343-2 or CP 343-2P AS-i master module in an ET 200M remote I/O station on the PROFIBUS DP
- Direct connection on the PROFINET IO via IE/AS-i LINK PN IO (AS-i single or double master)

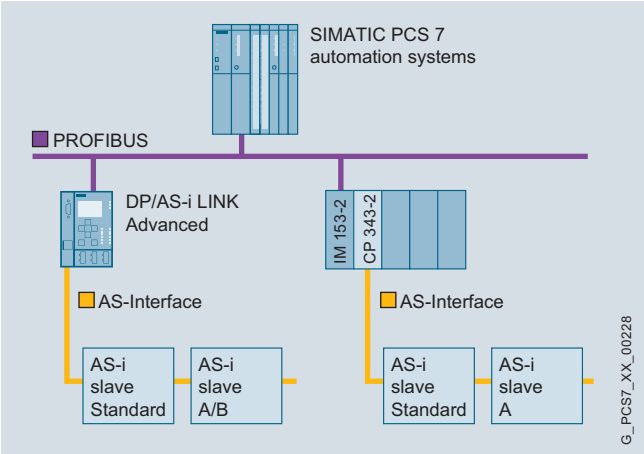

AS-i integration in SIMATIC PCS 7 via PROFIBUS DP

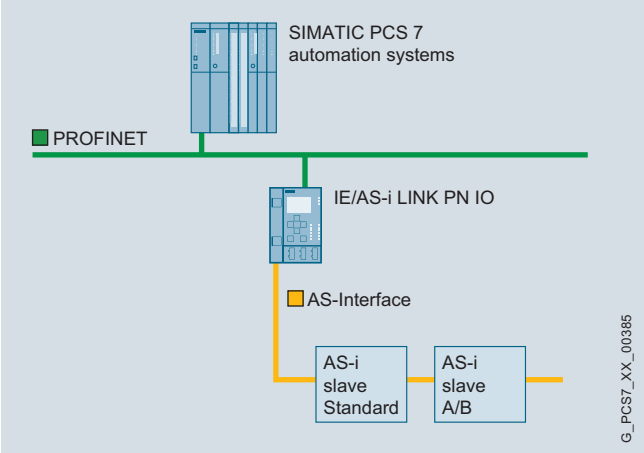

AS-i integration in SIMATIC PCS 7 via PROFINET IO

Design (continued)

System components

The basic components of a system installation are:

- AS-Interface master (alternatives):
  - DP/AS-i Link Advanced (AS-i single or double master)
  - CP 343-2 or CP 343-2P (both can be operated in an ET 200M remote I/O station)
  - IE/AS-i LINK PN IO (AS-i single or double master)
- AS-Interface block library for SIMATIC PCS 7 (add-on product, see catalog "Add-ons for SIMATIC PCS 7", section "Libraries/Blocks/Tools")
- AS-Interface shaped cable (use of round cable also possible if preferred)
- Modules for connecting standard sensors/actuators
- Power supply unit for powering the slaves
- Actuators and sensors with an integrated slave ASIC
- Address programming device for setting the slave address

AS-i slaves

You can use all digital AS-i standard slaves as well as digital AS-i A/B slaves in accordance with the AS-i specification V3.0. Analog AS-i slaves can also be integrated via the DP/AS-i Link Advanced or the IE/AS-i LINK PN IO.

Note:

The CP 343-2 and CP 343-2P AS-i masters transfer I/O data from AS-i slaves with a B address via data records and not via the cyclic process image (partition). To prevent delays in the communication process of the driver blocks for B slaves, it is recommended to avoid using AS-i slaves with B addresses for SIMATIC PCS 7 configurations with CP 343-2 or CP 343-2P.

Ordering data

	Article No.
DP/AS-i LINK Advanced Network transition between PROFIBUS DP and AS-Interface; master profiles M3 and M4, enhanced AS-Interface specification V3.0; IP20 degree of protection; manual on CD (English, German, French, Spanish, Italian)	
• Single master with display	**6GK1415-2BA10**
• Dual master with display	**6GK1415-2BA20**
CP 343-2 Communications module for the connection of SIMATIC S7-300 and ET 200M to AS-Interface; configuration of the AS-i network by means of SET key; including manual on CD (English, German, French, Spanish, Italian); without front panel connector	**6GK7343-2AH01-0XA0**
CP 343-2P Communications module for the connection of SIMATIC S7-300 and ET 200M to AS-Interface; configuration of the AS-i network by means of SET key or HW-Config (STEP 7 V5.2 and higher); including manual on CD (English, German, French, Spanish, Italian); without front connector	**6GK7343-2AH11-0XA0**
Front Connector 20-pin, with screw contacts	**6ES7392-1AJ00-0AA0**
IE/AS-i LINK PN IO Network transition between PROFINET/Industrial Ethernet and AS-Interface with IP20 degree of protection; including COMBICON plug-in screw-type terminals for connecting the AS-Interface cable	
• Single master with display	**6GK1411-2AB10**
• Dual master with display	**6GK1411-2AB20**
Further accessories For cable material, plugs, and further accessories, see Catalog IC 10 or Industry Mall/CA 01 under "Automation engineering – Industrial Controls – Industrial Communication – AS-Interface"	

Overview

CP 341 communication module

Modbus is connected to PROFIBUS DP using an ET 200M with a CP 341 communication module. The latter enables the fast and efficient exchange of data through point-to-point coupling.

The CP 341 communications module is available in 3 versions with different transmission physics:

- RS 232C (V.24)
- 20 mA (TTY)
- RS 422/RS 485 (X.27)

The Modbus Master or Modbus Slave loadable drivers are needed for the Modbus coupling.

Ordering data

	Article No.
CP 341 communication module with one RS 232 C (V.24) interface	**6ES7341-1AH02-0AE0**
RS 232 connecting cable for linking to SIMATIC S7	
• 5 m	**6ES7902-1AB00-0AA0**
• 10 m	**6ES7902-1AC00-0AA0**
• 15 m	**6ES7902-1AD00-0AA0**
CP 341 communication module with one 20 mA (TTY) interface	**6ES7341-1BH02-0AE0**
20 mA (TTY) connecting cable for linking to SIMATIC S7	
• 5 m	**6ES7902-2AB00-0AA0**
• 10 m	**6ES7902-2AC00-0AA0**
• 50 m	**6ES7902-2AG00-0AA0**
CP 341 communication module with one RS 422/485 (X.27) interface	**6ES7341-1CH02-0AE0**
RS 422/485 connecting cable for linking to SIMATIC S7	
• 5 m	**6ES7902-3AB00-0AA0**
• 10 m	**6ES7902-3AC00-0AA0**
• 50 m	**6ES7902-3AG00-0AA0**
Loadable drivers for CP 341	
Modbus master (RTU format)	
• Single license	**6ES7870-1AA01-0YA0**
• Single license, without software or documentation	**6ES7870-1AA01-0YA1**
Modbus slave (RTU format)	
• Single License	**6ES7870-1AB01-0YA0**
• Single license, without software or documentation	**6ES7870-1AB01-0YA1**

Notes

Overview

SIMATIC ET 200 remote I/O stations for SIMATIC PCS 7

The SIMATIC PCS 7 process control system offers a variety of possibilities for detecting and outputting process signals via sensors and actuators as well as for connecting process I/O to the automation systems:

- Signal and function modules in remote I/O stations on the fieldbus
  - PROFIBUS DP (ET 200M, ET 200iSP, ET 200S, ET 200pro)
  - PROFINET IO (ET 200M, ET 200SP)
- Intelligent, distributed field/process devices and operator terminals directly on the PROFIBUS DP, PROFIBUS PA or FOUNDATION Fieldbus H1
- Analog and digital I/O modules of the SIMATIC S7-400 operated centrally in the automation system

SIMATIC S7-400 signal modules used centrally in the automation system are suitable for small applications or plants with few remote locations.

In practice, however, distributed process I/Os are mainly used which, depending on the type, also support redundant configurations or operation in explosive gas/dust atmospheres:

- SIMATIC ET 200 remote I/Os in conjunction with classic field/process devices and HART field devices
- Intelligent field/process devices for direct fieldbus connection

Especially convincing arguments for distributed process I/O include:

- Modularity and consistency
- Flexible adaptability to the plant structure
- Minimum cabling and engineering requirements
- Low commissioning, servicing and lifecycle costs
- Wide technical bandwidth

Design

Comparison of distributed I/O systems for SIMATIC PCS 7

I/O system	ET 200M	ET 200iSP	ET 200SP	ET 200S	ET 200pro
					
Design					
Degree of protection	IP20	IP30	IP20	IP20	IP65/IP66/IP67
Design	Modular	Modular	Discretely scalable	Bit modular, expandable block	Modular
Assembly	Mounting rail	Mounting rail	Standard mounting rail	Standard mounting rail	Mounting rail
Connection system for sensors/actuators	Single-wire connection Spring-loaded/screw-type connections, FastConnect, TopConnect	Multi-wire connection Spring-loaded/screw-type connections	Single/multi-conductor connection Push-in terminals	Multi-wire connection Spring-loaded/screw-type connections, FastConnect	M8, M12, M23
Special applications					
Safety engineering	●	●	–	●	●
For use in hazardous areas	Zones 2, 22	Zones 1, 21	Zones 2, 22	Zones 2, 22	–
Increased availability	Switched, redundant	Switched, redundant	–	–	–
Temperature range	0 … +60 °C[1)]	-20 … +70 °C	0 … +60 °C[1)] (horizontal)	0 … +60 °C[1)]	-25 … +55 °C
Vibration resistance (continuous)	1 *g*	1 *g*	Up to 5 *g*	2 *g*	5 *g* (module-dependent)
Communication					
PROFIBUS (Cu/FO)	● / – (12 Mbps)	● / – (1.5 Mbps)	– / –	● / ● (12 Mbps)	● / ● (12 Mbps)
PROFINET (Cu/FO)	● / –	– / –	● / ●	– / –	– / –
System functions					
Permanent wiring	● (plugging and removal)	●	●	●	–
Hot swapping	● (with active backplane bus)	●	●	●	●
Expansion/ configuration during ongoing operation	● / ●	● / ●	– / –	● / –	– / –
Diagnostics (module-dependent)	Channel-discrete	Channel-discrete	Channel-discrete	Channel-discrete	Channel-discrete
functions					
Digital channels	●	●	●	●	●
Analog channels	●	●	●	●	●
incl. HART	●	●	●	–	–
Motor starters	–	–	–	●	–
Pneumatic interface	–	●	–	–	–
Technological functions	Counting/measuring, controlling, weighing	Counting, frequency measuring	–	Counting/measuring	–

[1)] Also available as a SIPLUS component for extended temperature range -25/-40 … +60/+70 °C and corrosive atmosphere/condensation (see details at www.siemens.com/siplus)

Design (continued)

Integration of process I/O in the hazardous area

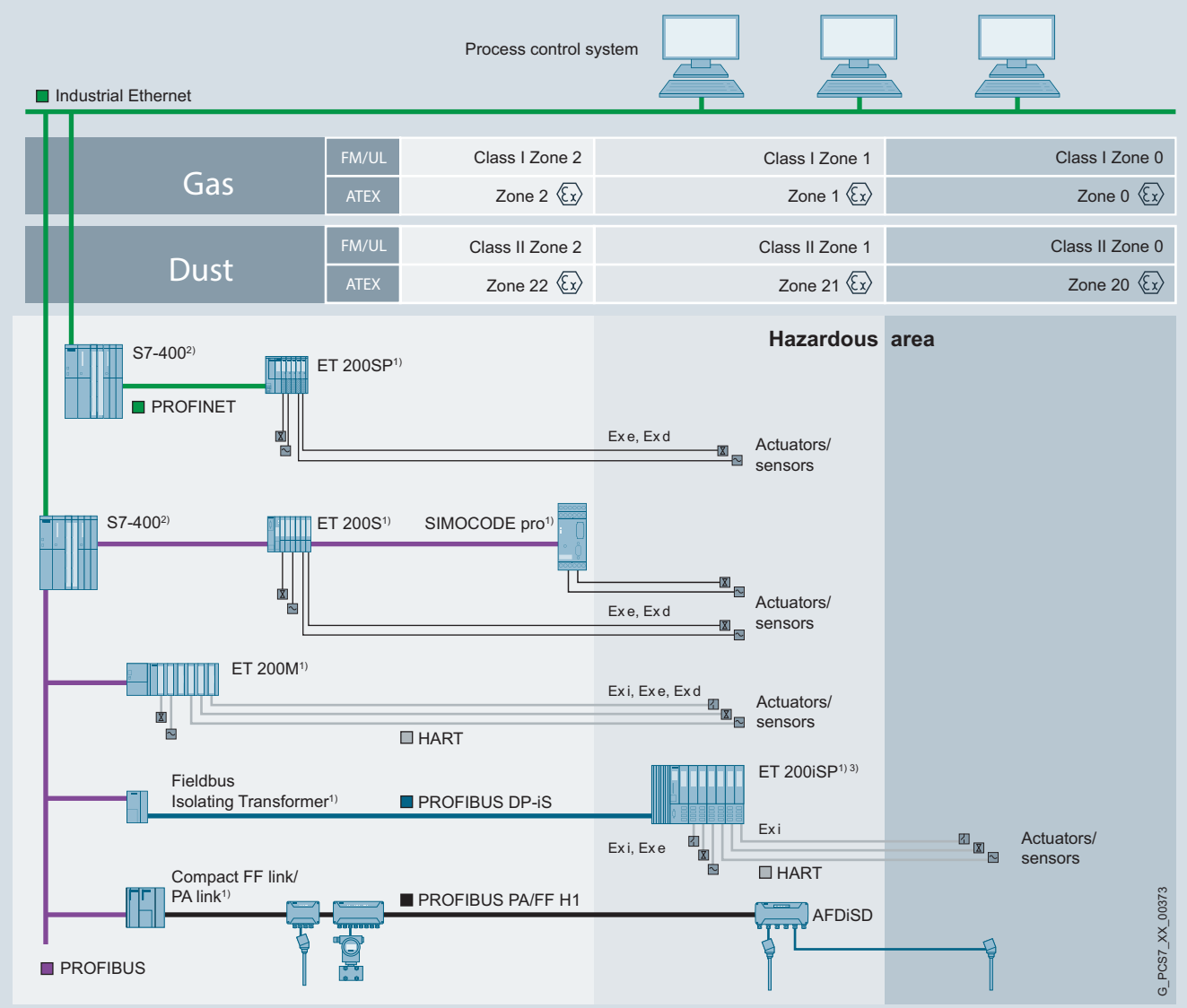

¹) Dust atmospheres: installation of components always in an enclosure with IP6x degree of protection
²) With 10 A DC standard power supply
³) Also complies with FM/UL according to Class I Division 2

Process I/O in explosive gas and dust atmospheres

The figure shows the possible applications for the SIMATIC PCS 7 process I/O with consideration of different environmental conditions.

Field devices on the PROFIBUS PA or FOUNDATION Fieldbus H1

Field devices located in Ex zones 0, 1, 2, 20, 21 or 22 can be integrated in SIMATIC PCS 7 via various active field distributors on the PROFIBUS PA or FOUNDATION Fieldbus H1. The active field distributor AFDiSD is required for field devices in Ex zones 0, 1, 20 or 21.

ET 200iSP distributed I/O

ET 200iSP remote I/O stations suitable for gas/dust atmospheres can be installed directly in the Ex zones 1, 2, 21 or 22 as well as in non-hazardous areas. The intrinsically-safe sensors, actuators and HART field devices can also be located in zone 0 or 20 if necessary.

ET 200M, ET 200SP and ET 200S distributed I/O

ET 200M, ET 200SP and ET 200S remote I/O stations can be used in Ex zone 2 or 22 as well as in non-hazardous areas. The actuators/sensors can also be positioned in Ex zone 1 or 21. Special Ex I/O modules are available for this in the ET 200M product range.

Design (continued)

ET 200pro distributed I/O

ET 200pro remote I/O stations are designed for use in non-hazardous areas.

Intrinsically-safe operator panel

An intrinsically-safe operator panel can be used in hazardous areas, zone 1, 2, 21 or 22, if required. For further information on this operator panel, see under SIMATIC HMI Thin Client Ex in the Catalog "Add-ons for the SIMATIC PCS 7 process control system", Section "Operator control and monitoring".

Function

Possible online modifications among the process I/Os	
ET 200M	• Adding of ET 200M stations • Adding of I/O modules to the station • Changing the parameter settings of I/O modules • Parameterization of connected HART field devices with SIMATIC PDM
ET 200iSP	• Adding of ET 200iSP stations • Adding of modules for the station • Re-configuration of modules • Parameterization of connected HART field devices using SIMATIC PDM
ET 200S	• Adding of ET 200S stations
ET 200pro	• Adding of ET 200pro stations
PROFIBUS DP, PROFIBUS PA, FOUNDATION Fieldbus H1	• Adding of PROFIBUS DP stations • Adding of PA links and PA field devices • Parameterization of PA or FF field devices with SIMATIC PDM

More information

For special blocks and block libraries for integration of field/process devices in SIMATIC PCS 7, e.g. devices from drive and weighing systems, see the Industry Mall as well as Catalog ST PCS 7 AO, "Add-ons for the SIMATIC PCS 7 Process Control System".

For information and Ordering data on field/process devices, drive and motor management systems from Siemens, see the Industry Mall as well as the PDF versions of the corresponding catalogs on the Internet.

You will find the Industry Mall on the Internet at:

www.siemens.com/industrymall

The PDF versions of the catalogs are available on the Internet at:

www.siemens.com/automation/infocenter

Overview

Signal modules from the SIMATIC S7-400 range can be used in the SIMATIC PCS 7 automation system if necessary. These are primarily an alternative to use of distributed I/Os in the case of small applications or systems with a small distributed configuration.

For SIMATIC PCS 7, the I/O modules listed in the Ordering data have been selected from the range of S7-400 signal modules.

Notes:

Apart from these selected modules it is also possible to use - with limitations in functions - all other I/O modules from the current range of S7-400 signal modules.

All process data from the I/O are available for PCS 7 engineering in the CFC, and can be graphically interconnected to the signal name in the signal list. Diagnostics information is generated automatically when using the I/O modules listed here.

When using other I/O modules, integration in SIMATIC PCS 7 is limited to the process data, i.e. the full scope of diagnostics functions is not automatically available. These modules can therefore only be used meaningfully in SIMATIC PCS 7 if the diagnostics capability can be omitted.

Online modifications and redundancy are not supported by the central I/O.

Technical specifications

You can find the detailed technical data of the S7-400 modules at the following points:

- Catalog ST 70 or
- Industry Mall/CA 01 under "Automation technology – Automation systems – SIMATIC industrial automation systems – Controllers – Advanced Controller – S7-400/S7-400H/ S7-400F/FH"

Ordering data

	Article No.
SM 421 Digital Input Modules	
• 32 inputs, 24 V DC	**6ES7421-1BL01-0AA0**
• 32 inputs, 120 V AC/DC	**6ES7421-1EL00-0AA0**
• 16 inputs, 24 V DC, with process/diagnostics interrupt	**6ES7421-7BH01-0AB0**
• 16 inputs, 24 to 60 V AC/DC, with process/diagnostics interrupt	**6ES7421-7DH00-0AB0**
• 16 inputs, 120/230 V AC/DC, inputs according to IEC 1131-2 Type 2	**6ES7421-1FH20-0AA0**
SM 422 Digital Output Modules	
• 32 outputs; 24 V DC, 0.5 A	**6ES7422-1BL00-0AA0**
• 32 outputs; 24 V DC, 0.5 A; with diagnostics	**6ES7422-7BL00-0AB0**
• 16 outputs; 24 V DC, 2 A	**6ES7422-1BH11-0AA0**
• 16 outputs; relay contacts	**6ES7422-1HH00-0AA0**
• 16 outputs; 120/230 V AC, 2 A	**6ES7422-1FH00-0AA0**
SM 431 Analog Input Modules	
• 16 inputs, non-floating, 13 bit	**6ES7431-0HH00-0AB0**
• 8 inputs, floating, 13 bit	**6ES7431-1KF00-0AB0**
• 8 inputs, floating, 14 bit, with linearization (RTD/TC)	**6ES7431-1KF10-0AB0**
• 8 inputs, floating, 14 bit	**6ES7431-1KF20-0AB0**
• 16 inputs, floating, 16 bit; hardware interrupt capability, with diagnostics interrupt	**6ES7431-7QH00-0AB0**
• 8 inputs, floating, 16 bit; hardware interrupt capability, for thermocouples, with diagnostics interrupt	**6ES7431-7KF00-0AB0**
• 8 inputs, floating, 16 bit; hardware interrupt capability, for thermal resistors, with diagnostics interrupt	**6ES7431-7KF10-0AB0**
SM 432 Analog Output Modules	
• 8 outputs, floating, 13 bit; for ± 10 V, 0 to 10 V, 1 to 5 V, ± 20 mA, 0 to 20 mA, 4 to 20 mA	**6ES7432-1HF00-0AB0**
Front Connector (1 unit)	
• With screw contacts	**6ES7492-1AL00-0AA0**
• With spring clamps	**6ES7492-1BL00-0AA0**
• With crimp contacts	**6ES7492-1CL00-0AA0**

Overview

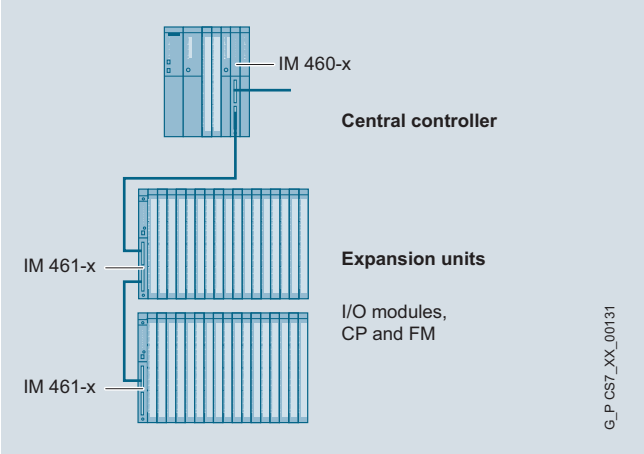

Expansion units can be used for the distributed expansion of the SIMATIC S7-400. The IM 460-x interface modules are used as the interface for these expansion units.

Restrictions compared to standard I/O modules from the ET 200M range

- No redundant interfacing of expansion units
- No configuration during operation

Racks

The universal racks (UR) are used for SIMATIC PCS 7. They can be used as central racks and as expansion racks. Other racks: see Catalog ST 70.

Ordering data

	Article No.
IM 460-0 interface module • Transmitter module for central controller • Without transmission of voltage to the expansion unit • Cable up to 5 m long • With K-bus for communication with CPs and FMs in the expansion unit • For connecting as many as 8 expansion units	**6ES7460-0AA01-0AB0**
IM 461-0 Interface Module Corresponding receiver module for the expansion unit	**6ES7461-0AA01-0AA0**
IM 460-1 Interface Module • Transmitter module for central controller • With transmission of the 5 V supply for I/O modules • Cable up to 1.5 m long • Without transmission of the K-bus, hence solely for communication from I/O modules	**6ES7460-1BA01-0AB0**
IM 461-1 Interface Module Corresponding receiver module for the expansion unit	**6ES7461-1BA01-0AA0**
IM 460-3 Interface Module • Transmitter module for central controller • Without transmission of voltage to the expansion unit • Cable up to 100 m long • With K-bus for communication with CPs and FMs in the expansion unit • For connecting as many as 8 expansion units	**6ES7460-3AA01-0AB0**
IM 461-3 Interface Module Corresponding receiver module for the expansion unit	**6ES7461-3AA01-0AA0**
UR1 rack for central and expansion units • 18 slots • Suitable for redundant power supply	**6ES7400-1TA01-0AA0**
UR2 rack for central and expansion units • 9 slots • Suitable for redundant power supply	**6ES7400-1JA01-0AA0**
Accessories	
468-1 Connecting Cable for connecting IM 460-0 and IM 461-0; IM 460-3 and IM 461-3	
• 0.75 m	**6ES7468-1AH50-0AA0**
• 1.5 m	**6ES7468-1BB50-0AA0**
• 5 m	**6ES7468-1BF00-0AA0**
Additional lengths for connecting IM 460-3 and IM 461-3	
• 10 m	**6ES7468-1CB00-0AA0**
• 25 m	**6ES7468-1CC50-0AA0**
• 50 m	**6ES7468-1CF00-0AA0**
• 100 m	**6ES7468-1DB00-0AA0**
Terminator for IM 461-0	**6ES7461-0AA00-7AA0**
468-3 Connecting Cable for connecting IM 460-1 and IM 461-1	
• 0.75 m	**6ES7468-3AH50-0AA0**
• 1.5 m	**6ES7468-3BB50-0AA0**

Overview

SITOP PSU8200 24 V, 20 A

A reliable 24-V power supply is a basic condition for every plant operation. SITOP power supplies have MTBF values of up to 1 million hours. meet the particularly stringent requirements of process automation.

For world-wide use, the 1, 2 or 3-phase DIN rails provide a wide ambient temperature range of -25 … +70 °C as well as comprehensive international approvals such as ATEX, Class I Div2, IECex or GL.

The innovative SITOP PSU8600 power supply system can be fully integrated in the plant via PROFINET and thereby offers completely new configuration and diagnostic capabilities. It is thus possible to individually adjust and monitor the voltage and current of each output. For the first time, users have access to information about the control circuit including energy flow data.

SITOP UPS1600 and UPS1100

24-V power units with output capacities up to 1000 W can be individually adapted to the plant configuration and plant expansion and combined with redundancy, selectivity or DC USP modules. This means that you can expand the system to even include complete all-round protection.

The SITOP library is available with blocks and faceplates for direct integration into SIMATIC PCS 7. This means that PCS 7 users automatically receive information about operating states, maintenance requirements (e.g. battery replacement) and faults (e.g. power failure, short-circuit or overload in 24V circuits).

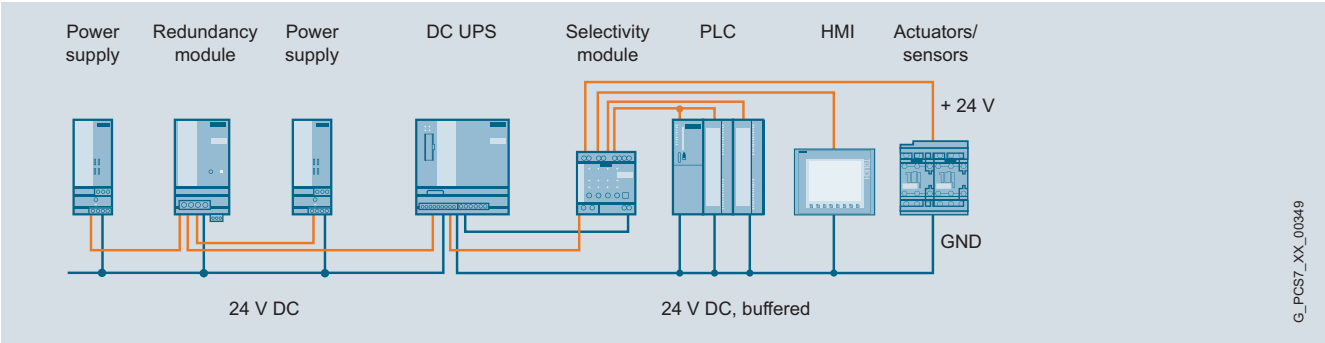

24 V DC power supply with expansion modules and DC UPS

More information

You can find detailed information and technical specifications for the 1-phase, 2-phase and 3-phase SITOP modular power supplies, for the SITOP PSU8600 power supply system, for the redundancy, buffer and selectivity modules, as well as for corresponding 24 V DC uninterruptible power supplies in the Catalog KT 10.1.

Additional information is available via the Internet at:

- SITOP power supplies:
  www.siemens.com/sitop
- CAx data (2D, 3D, circuit diagram macros):
  www.siemens.com/sitop-cax
- Operating instructions:
  www.siemens.com/sitop/manuals

SITOP Selection Tool

The SITOP Selection Tool helps you select the power supply and DC UPS for your specific application easily and quickly:
www.siemens.com/sitop-selection-tool

SITOP library for SIMATIC PCS 7

SIMATIC PCS 7 V8.0 with SP2, V8.1, V8.1 with SP1 (V8.2 available soon) are supported.
https://support.industry.siemens.com/cs/ww/en/view/109476154

SIMATIC PCS 7 Standard Architectures manual (section 18, 24 V DC supply concepts)

https://support.industry.siemens.com/cs/ww/en/view/109480315

Application example: Integration of a SITOP 24V power supply in SIMATIC PCS 7

https://support.industry.siemens.com/cs/ww/de/view/109481908

Overview

- 24 V DC/5 A, 10 A, 20 A and 40 A
- Single-phase wide-range input allows connection to any supply system and ensures safety in the case of voltage supply deviations
- Extremely slim design – no lateral installation clearances required
- Power Boost with 3 times the rated current (for 25 ms) for tripping protective devices
- Extra power with 1.5 times the rated current (5 s/min) for brief, operational overload
- Optional short-circuit behavior between constant current and restart
- Optional symmetrical load distribution for parallel operation
- Operating status display on 3 LEDs
- Extremely high efficiency up to 94%
- Large temperature range from -25 °C to +70 °C
- Comprehensive certifications, such as cULus, ATEX, IECex or GL
- Direct integration in SIMATIC PCS 7 via SITOP library

Design

Product overview

Modules		Versions	Input	Output
Power supplies				
	SITOP modular, 1-phase, 24 V DC	PSU8200, 5 A	120/230 V AC	24 V DC, 5 A
		PSU8200, 10 A	120/230 V AC	24 V DC, 10 A
	SITOP modular, 1-phase, 24 V DC	PSU8200, 20 A	120 ... 230 V AC/DC	24 V DC, 20 A
		PSU100M, 40 A	120/230 V AC	24 V DC, 40 A

Ordering data

	Article No.
SITOP modular power supplies, 1-phase, 24 V DC	
SITOP PSU8200, 1-phase, 24 V DC, 5 A Stabilized power supply Input: 120/230 V AC Output: 24 V DC/5 A	**6EP3333-8SB00-0AY0**
SITOP PSU8200, 1-phase, 24 V DC, 10 A Stabilized power supply Input: 120/230 V AC Output: 24 V DC/10 A	**6EP3334-8SB00-0AY0**
SITOP PSU8200, 1-phase, 24 V DC, 20 A Stabilized power supply Input: 120 … 230 V AC / 110 … 220 V DC Output: 24 V DC/20 A	**6EP1336-3BA10**
SITOP PSU100M, 1-phase, 24 V DC, 40 A Stabilized power supply Input: 120/230 V AC Output: 24 V DC/40 A	**6EP1337-3BA00**

Single and 2-Phase Power Supplies 24 V DC

Overview

- 24 V DC/5 A and 10 A, also available as version with PCB with protective coating.
- 1-phase and 2-phase ultra-wide input range
- Extremely slim design – no lateral installation clearances required
- Power Boost with 3 times the rated current (for 25 ms) for tripping protective devices
- Extra power with 1.5 times the rated current (5 s/min) for brief, operational overload
- Optional short-circuit behavior between constant current and restart
- Optional symmetrical load distribution for parallel operation
- Operating status display on 3 LEDs
- High degree of efficiency of up to 91%
- Large temperature range from -25 °C to +70 °C
- Comprehensive certifications, such as cULus, ATEX, IECex or GL
- Direct integration in SIMATIC PCS 7 via SITOP library

Design

Product overview

Modules		Versions	Input	Output
Power supplies				
	SITOP modular, 1-phase and 2-phase, 24 V DC	PSU200M, 5 A	120/230 ... 500 V AC	24 V DC, 5 A
		PSU200M, 10 A	120/230 ... 500 V AC	24 V DC, 10 A
	SITOP modular PLUS, 1-phase and 2-phase, 24 V DC, with protective coating	PSU200M, 5 A	120/230 ... 500 V AC	24 V DC, 5 A
		PSU200M, 10 A	120/230 ... 500 V AC	24 V DC, 10 A

Ordering data

	Article No.
SITOP modular power supplies, 1-phase and 2-phase, 24 V DC	
SITOP PSU200M, 1-phase and 2-phase, 24 V DC, 5 A Stabilized power supply Input: 120 … 230 V / 230 … 500 V AC Output: 24 V DC/5 A	**6EP1333-3BA10**
SITOP PSU200M PLUS, 1-phase and 2-phase, 24 V DC, 5 A Stabilized power supply Input: 120 … 230 V / 230 … 500 V AC Output: 24 V DC/5 A Version with protective coating	**6EP1333-3BA10-8AC0**
SITOP PSU200M, 1-phase and 2-phase, 24 V DC, 10 A Stabilized power supply Input: 120 … 230 V / 230 … 500 V AC Output: 24 V DC/10 A	**6EP1334-3BA10**
SITOP PSU200M PLUS, 1-phase and 2-phase, 24 V DC, 10 A Stabilized power supply Input: 120 … 230 V / 230 … 500 V AC Output: 24 V DC/10 A Version with protective coating	**6EP1334-3BA10-8AB0**

Overview

- 24 V DC/20 A and 40 A
- 3-phase wide-range input from 320 to 575 V AC for global use
- Extremely slim design – no lateral installation clearances required
- Power Boost with 3 times the rated current (for 25 ms) for tripping protective devices
- Extra power with 1.5 times the rated current (5 s/min) for brief, operational overload
- Optional short-circuit behavior between constant current and restart
- Optional symmetrical load distribution for parallel operation
- Operating status display on 3 LEDs
- Extremely high efficiency up to 94%
- Large temperature range from -25 °C to +70 °C
- Comprehensive certifications, such as cULus, ATEX, IECex and GL
- Direct integration in SIMATIC PCS 7 via SITOP library

Design

Product overview

Modules		Versions	Input	Output
Power supplies				
	SITOP modular, 3-phase, 24 V DC	PSU8200, 20 A	3 AC 400 ... 500 V	24 V DC, 20 A
		PSU8200, 40 A	3 AC 400 ... 500 V	24 V DC, 40 A

Ordering data

	Article No.
SITOP modular power supplies, 3-phase, 24 V DC	
SITOP PSU8200, 3-phase, 24 V DC, 20 A Stabilized power supply Input: 3 AC 400 … 500 V Output: 24 V DC/20 A	**6EP3436-8SB00-0AY0**
SITOP PSU8200, 3-phase, 24 V DC, 40 A Stabilized power supply Input: 3 AC 400 … 500 V Output: 24 V DC/40 A	**6EP1437-3BA10**

3-phase power supply system, 24 V DC

Overview

The unique SITOP PSU8600 power supply system sets new standards for industrial power supplies. Voltage and current response thresholds can be set individually for each output of this power supply system. Selective monitoring of each output for overload also enables fast fault location. Depending on requirements, additional modules from the modular system can be added without wiring overhead, for example, to buffer against transient power failures.

Comprehensive diagnostic and maintenance information is available via PROFINET and can be evaluated and visualized directly in SIMATIC PCS 7. Optimal support is also provided for energy management of a plant: From the acquisition of energy data from individual outputs, the specific activation and deactivation of outputs via PROFIenergy, to direct integration in power management systems.

Special features

- Reduced space requirement and costs due to multiple integrated outputs with selective monitoring
- Individually configurable outputs (voltage from 5 V to 28 V, power response threshold value from 0.5 A to 5 A or 10 A)
- Compensation for power losses can be set separately for each output
- Narrow width without lateral installation clearances
- Low temperature rise in the control cabinet due to very high efficiency
- Two integrated Ethernet/PROFINET ports (no external switch required)
- Can be added without wiring overhead (more outputs, buffer module for bridging transient power failures)
- Preventive maintenance reduces downtimes
- Energy savings during breaks through targeted switching of outputs (via STEP 7 program or PROFIenergy profile)
- SIMATIC S7 function blocks for easy integration in STEP 7 user programs and faceplates for operator control and monitoring.
- Direct integration in SIMATIC PCS 7 via SITOP library

Design

Product overview

Modules		Versions	Input	Output
PSU8600 basic units				
	SITOP power supply system, 3-phase, 24 V DC	PSU8600, 20 A	3 AC 400 to 500 V	24 V DC, 20 A
		PSU8600, 40 A	3 AC 400 to 500 V	24 V DC, 40 A
		PSU8600, 20 A/5 × 4 A	3 AC 400 to 500 V	24 V DC, 20 A/4 × 5 A
		PSU8600, 40 A/5 × 10 A	3 AC 400 to 500 V	24 V DC, 40 A/4 × 10 A
CNX8600 for expanding outputs				
	SITOP CNX8600 4 × 5 A expansion module	CNX8600, 4 × 5 A	24 V DC	24 V DC, 4 × 5 A
	SITOP CNX8600 4 × 10 A expansion module	CNX8600, 4 × 10 A	24 V DC	24 V DC, 4 × 10 A
BUF8600 buffer				
	SITOP BUF8600 buffer module	BUF8600, 100 ms/40 A BUF8600, 300 ms/40 A BUF8600, 4 s/40 A BUF8600, 10 s/40 A	24 V DC	24 V DC, 40 A

Ordering data

	Article No.
SITOP PSU8600 3-phase, 24 V DC/20 A with PN/IE connection Stabilized power supply Input: 3 AC 400 … 500 V Output: 24 V DC/20 A	**6EP3436-8SB00-2AY0**
SITOP PSU8600 3-phase, 24 V DC/40 A with PN/IE connection Stabilized power supply Input: 3 AC 400 … 500 V Output: 24 V DC/40 A	**6EP3437-8SB00-2AY0**
SITOP PSU8600 3-phase, 24 V DC/20 A/4 × 5 A with PN/IE connection Stabilized power supply Input: 3 AC 400 … 500 V Output: 24 V DC/20 A	**6EP3436-8MB00-2CY0**
SITOP PSU8600 3-phase, 24 V DC/40 A/4 × 10 A with PN/IE connection Stabilized power supply Input: 3 AC 400 … 500 V Output: 24 V DC / 40 A/4 × 10 A	**6EP3437-8MB00-2CY0**

	Article No.
SITOP CNX8600 4 × 5 A expansion module For SITOP PSU8600 Output: 24 V DC / 4 × 5 A	**6EP4436-8XB00-0CY0**
SITOP CNX8600 4 × 10 A expansion module For SITOP PSU8600 Output: 24 V DC / 4 × 10 A	**6EP4437-8XB00-0CY0**
SITOP BUF8600 100 ms buffer module For SITOP PSU8600 Buffer capacity 100 ms/40 A	**6EP4297-8HB00-0XY0**
SITOP BUF8600 300 ms buffer module For SITOP PSU8600 Buffer capacity 300 ms/40 A	**6EP4297-8HB10-0XY0**
SITOP BUF8600 4 s buffer module For SITOP PSU8600 Buffer capacity 4 s/40 A	**6EP4293-8HB00-0XY0**
SITOP BUF8600 10 s buffer module For SITOP PSU8600 Buffer capacity 10 s/40 A	**6EP4295-8HB00-0XY0**
Device labeling plates	**3RT1900-1SB20**

Overview

Redundancy modules

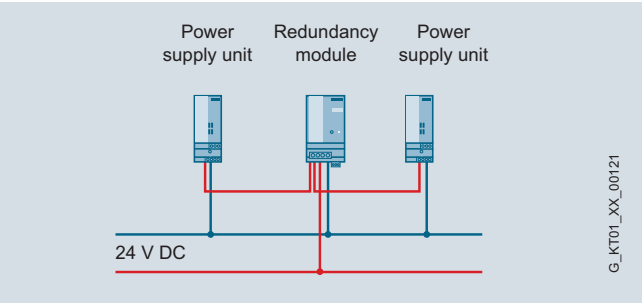

SITOP redundancy modules

- High availability of the 24 V DC supply thanks to redundant configuration
- Decoupling of two power supplies of the same type in parallel operation via diodes
- 24 V DC power supply is maintained in the event of a power failure
- Compact redundancy modules for power supply units up to 40 A
- Diagnostic signal via LED and signaling contacts
- Adjustable switching threshold for LED and signaling contacts
- Direct integration in SIMATIC PCS 7 via SITOP library

Buffer module

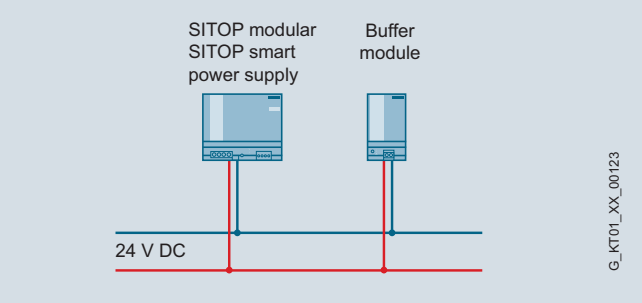

SITOP buffer module

- Buffering the load current during brief power interruptions
- Maintenance-free capacitors with short charging times as energy storage units
- Wiring parallel to the output of the power supply
- Parallel switching of several buffer modules possible
- A supply voltage > 20.5 V is signaled by an LED on the device.
- Buffer time up to: 200 ms at 40 A, 400 ms at 20 A, 800 ms at 10 A, 1.6 s at 5 A load current

Selectivity modules

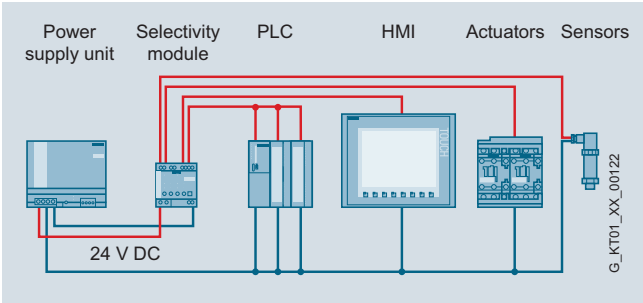

SITOP selectivity modules

- Distribution of the load current over up to 4 current circuits with individually adjustable maximum current
- Monitoring of individual partial currents
- Reliable tripping regardless of cable lengths and cross-sections
- Selective cutoff of current circuits at overload or short-circuit
- Simple commissioning thanks to manual switch on/off of outputs
- Sequential connection delay of feeders reduces total inrush current
- Sealable transparent cover over adjusters for currents and times protect against maladjustment
- Remote reset possible from a central location
- Signaling via LEDs (channel-by-channel) and remote diagnostics via common signaling contact or single-channel signaling
- Evaluation of the status of 4 current circuits of selectivity modules with single-channel signaling via SIMATIC S7 function blocks.
- Direct integration in SIMATIC PCS 7 via SITOP library

Design

Product overview

Modules		Versions	Input	Output
Redundancy modules				
	SITOP redundancy module PSE202U	24 V DC, 40 A	24 V DC	U_e – approx. 0.5 V
		24 V DC, 10 A	24 V DC	U_e – approx. 0.5 V
Buffer module				
	SITOP modular buffer module	--	24 V DC	Ue - approx. 1 V
Selectivity modules				
	SITOP PSE200U selectivity module, 3 A, 4-channel, 4 x 3 A Adjustable output current: 0.5 ... 3 A	Without single-channel signaling (common signaling contact)	24 V DC	Ue - approx. 0.2 V
		With single-channel signaling		
	SITOP selectivity module PSE200U, 10 A, 4-channel, 4 x 10 A Adjustable output current: 3 ... 10 A	Without single-channel signaling (common signaling contact)	24 V DC	Ue - approx. 0.2 V
		With single-channel signaling		

Ordering data

	Article No.
Expansion modules for SITOP modular power supplies	
Redundancy modules	
Redundancy module SITOP PSE202U, 24 V DC/40 A Suitable for decoupling two SITOP power supplies each with a maximum of 20 A output current Input: 24 V DC Output: Ue - approx. 0.5 V	**6EP1961-3BA21**
Redundancy module SITOP PSE202U, 24 V DC/10 A Suitable for decoupling two SITOP power supplies each with a maximum of 5 A output current Input: 24 V DC Output: Ue – approx. 0.5 V	**6EP1964-2BA00**
Buffer module	
SITOP PSE201U buffer module For SITOP modular and SITOP smart buffer time 100 ms to 10 s, depending on load current Input: 24 V DC Output: Ue - approx. 1 V	**6EP1961-3BA01**

	Article No.
Selectivity modules	
SITOP PSE200U selectivity module, 3 A 4-channel (4 x 3 A) Input: 24 V DC Output: Ue – approx. 0.2 V Adjustable output current 0.5 to 3 A	
• Without single-channel signaling (common signaling contact)	**6EP1961-2BA11**
• With single-channel signaling	**6EP1961-2BA31**
SITOP PSE200U selectivity module, 10 A 4-channel (4 x 10 A) Input: 24 V DC Output: Ue – approx. 0.2 V Adjustable output current 3 to 10 A	
• Without single-channel signaling (common signaling contact)	**6EP1961-2BA21**
• With single-channel signaling	**6EP1961-2BA41**

Overview

SITOP DC UPS with capacitors

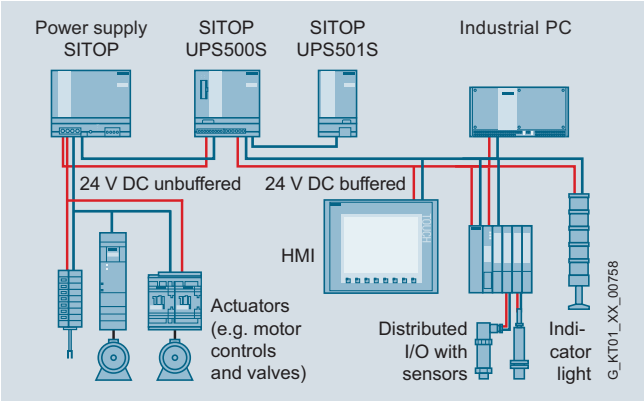

- Buffering of 24 V DC up to 15 A
- Buffering of power failures for up to several minutes enables data backup and controlled shutdown
- Ambient temperatures up to +60 °C
- Short charging times
- Maintenance-free operation and long lifetime, also at high temperatures
- Status messages via LEDs and floating signaling contacts
- Communication with controller/IPC via USB
- Extension of the buffer time with up to 3 expansion modules

SITOP UPS1600 DC UPS modules with UPS1100 battery modules

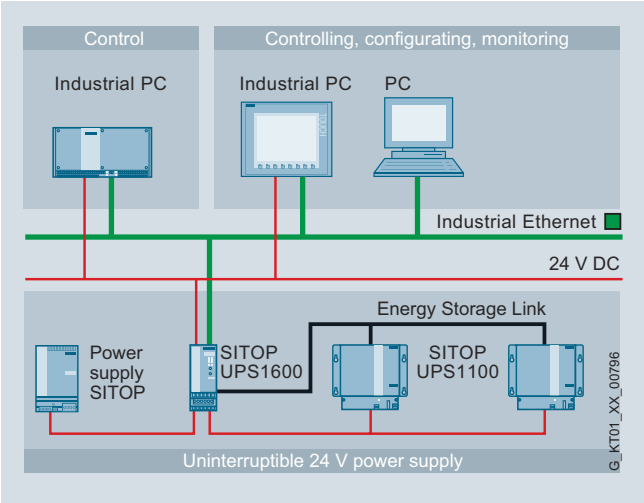

- High-performance DC UPS modules in space-saving, slim design
- 24 V DC buffering for a few hours for the purpose of continuing processes
- High overload capability for mains and buffer mode
- Starting from the battery module supports stand-alone mode, e.g. for starting generators
- Open communication via USB or two Ethernet/PROFINET ports
- Easy configuration thanks to automatic detection of battery modules
- High reliability and availability due to monitoring of the operational readiness, battery feed, aging and charging status
- Battery-saving charging due to temperature-specific charging characteristic
- Defined shutdown of several IPCs or controllers on one UPS (versions with Ethernet/PROFINET)
- Remote monitoring via integrated web server (versions with Ethernet/PROFINET)
- SIMATIC S7 function blocks for easy integration in STEP 7 user programs and faceplates for operator control and monitoring.
- Direct integration in SIMATIC PCS 7 via SITOP library

The intelligent UPS1600 battery management charges the UPS1100 with the optimal, temperature-controlled charging characteristics and monitors the status (operating data and diagnostic information) of the connected battery modules via the energy storage link. For longer backup times, up to six same type battery modules can be connected in parallel.

Design

Product overview

Modules		Versions	Input	Output
Uninterruptible 24 V DC power supplies				
SITOP DC UPS with capacitors				
	SITOP DC UPS basic device UPS500S, 15 A, IP20, can be expanded with SITOP UPS501S	Power 2.5 KW	24 V DC (22 ... 29 V)	24 V DC (23.3 ... 24.7 V DC or 24 V ± 3 %)
		Power 5 KW		
	SITOP DC UPS expansion module UPS501S, 7 A	Power 5 KW	24 V DC	24 V DC
	SITOP DC UPS basic device UPS500P, 7 A, IP65, cannot be expanded	Power 5 KW	24 V DC (22.5 ... 29 V DC)	24 V DC (23.3 ... 24.7 V DC or 24 V ± 3 %)
		Power 10 KW		
SITOP DC UPS with battery modules				
SITOP UPS1600 DC UPS, can be combined with SITOP UPS1100 battery modules				
	SITOP UPS1600 24 V/10 A	Without communications interface	24 V DC (21 … 29 V)	Normal mode: U_e – approx. 0.01 × I Buffer mode: 27 V DC (no load); 24 V (50% battery rated current); 22 V (100% battery rated current); 18.5 V (exhaustive discharge protection)
		USB interface		
		2 Ethernet/PROFINET interfaces		
	SITOP UPS1600 24 V/20 A	Without communications interface		
		USB interface		
		2 Ethernet/PROFINET interfaces		
	SITOP UPS1600 24 V/40 A	Without communications interface		
		USB interface		
		2 Ethernet/PROFINET interfaces		
SITOP UPS1100 battery modules for SITOP UPS1600 DC UPS modules				
	SITOP UPS1100 battery module for SITOP UPS1600, 10 A	24 V DC, 1.2 Ah	--	24 V DC, 22 ... 27.0 V DC (no load)
		24 V DC, 2.5 Ah, high temperature		
	SITOP UPS1100 battery module for SITOP UPS1600, 10 A and 20 A	24 V DC, 3.2 Ah	--	24 V DC, 22 ... 27.0 V DC (no load)
		24 V DC, 7 Ah		
		24 V DC, 5 Ah LIFePo		24 V DC, 22 ... 28.8 V DC (no load)
	SITOP UPS1100 battery module for SITOP UPS1600, 20 A and 40 A	24 V DC, 12 Ah	--	24 V DC, 22 ... 27.0 V DC (no load)

SITOP Selection Tool

The SITOP Selection Tool offers detailed selection guidance according to criteria such as the required backup time, nominal current, peak current and battery connection threshold:
www.siemens.com/sitop-selection-tool

Ordering data

	Article No.
Uninterruptible 24 V DC power supplies	
DC UPS with capacitors	
DC UPS basic device SITOP UPS500S, 15 A Degree of protection IP20, input: 24 V DC; Output: 24 V DC; USB port; can be expanded with SITOP UPS501S	
• Power 2.5 KW	**6EP1933-2EC41**
• Power 5 KW	**6EP1933-2EC51**
DC UPS expansion module SITOP UPS501S, 7 A For connection to the basic device; Input: 24 V DC; Output: 24 V DC; power 5 KW	**6EP1935-5PG01**
DC UPS basic device SITOP UPS500P, 7 A Degree of protection IP65, input: 24 V DC; Output: 24 V DC; USB port; cannot be expanded	
• Power 5 KW	**6EP1933-2NC01**
• Power 10 KW	**6EP1933-2NC11**
SITOP UPS1600 DC UPS modules, can be combined with SITOP UPS1100 battery modules	
DC UPS module SITOP UPS1600, 24 V/10 A Input: 24 V DC; Output: 24 V DC	
• Without communications interface	**6EP4134-3AB00-0AY0**
• With USB interface	**6EP4134-3AB00-1AY0**
• With 2 Ethernet/PROFINET interfaces	**6EP4134-3AB00-2AY0**
DC UPS module SITOP UPS1600, 24 V/20 A Input: 24 V DC; Output: 24 V DC	
• Without communications interface	**6EP4136-3AB00-0AY0**
• With USB interface	**6EP4136-3AB00-1AY0**
• With 2 Ethernet/PROFINET interfaces	**6EP4136-3AB00-2AY0**
DC UPS module SITOP UPS1600, 24 V/40 A Input: 24 V DC; Output: 24 V DC	
• Without communications interface	**6EP4137-3AB00-0AY0**
• With USB interface	**6EP4137-3AB00-1AY0**
• With 2 Ethernet/PROFINET interfaces	**6EP4137-3AB00-2AY0**
SITOP UPS1600 Starter Kit Comprising: • DC UPS SITOP UPS1600, 4 V DC/10 A with Ethernet/PROFINET interface • SITOP UPS1100 battery module 3.2 Ah • Industrial Ethernet cable • Software tools and documentation on CD	**6EP4134-3AB00-2AP0**

	Article No.
SITOP UPS1100 battery modules for SITOP UPS1600 DC UPS modules	
Battery module SITOP UPS1100 24 V/1.2 Ah With maintenance-free, sealed rechargeable lead batteries for DC UPS module SITOP UPS1600, 10 A	**6EP4131-0GB00-0AY0**
Battery module SITOP UPS1100 24 V/3.2 Ah With maintenance-free, sealed rechargeable lead batteries for DC UPS module SITOP UPS1600, 10 A and 20 A	**6EP4133-0GB00-0AY0**
Battery module SITOP UPS1100 24 V/7 Ah With maintenance-free, sealed rechargeable lead batteries for DC UPS module SITOP UPS1600, 10 A and 20 A	**6EP4134-0GB00-0AY0**
Battery module SITOP UPS1100 24 V/5 Ah With maintenance-free, sealed lithium-ion rechargeable batteries for DC UPS module SITOP UPS1600, 10 A and 20 A	**6EP4133-0JB00-0AY0**
Battery module SITOP UPS1100 24 V/12 Ah With maintenance-free, sealed rechargeable lead batteries for DC UPS module SITOP UPS1600, 20 A and 40 A	**6EP4135-0GB00-0AY0**
SITOP UPS 1100 battery module 2.5 Ah, high temperature With maintenance-free, sealed rechargeable pure-lead batteries for DC UPS module SITOP UPS1600, 10 A	**6EP4132-0GB00-0AY0**

Overview

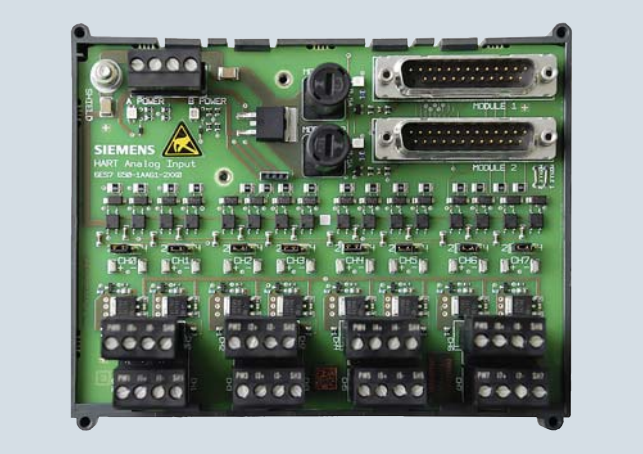

MTA AI HART terminal module, 8-channel

MTA terminal modules (Marshalled Termination Assemblies) can be used to connect field devices, sensors and actuators to the I/O modules of the ET 200M remote I/O stations simply, rapidly and reliably. They can be used to significantly reduce the costs and required work for cabling and commissioning, and prevent wiring errors.

The individual MTA terminal modules are each tailored to specific I/O modules from the ET 200M range (see design for assignment table). MTA versions are available for standard I/O modules as well as for redundant and safety-related I/O modules.

The MTA terminal modules are connected to the I/O modules using 3 m or 8 m long preassembled cables.

The MTA Power Supply 24 V DC terminal module comes with 16 24 V DC, 0.5 A outputs protected against short-circuit for redundant power supply of field devices that are no longer supplied by means of signal lines by some of the newer MTAS, for example, 4-wire transmitter. If 0.5 A is insufficient, you can also connect two or more outputs in parallel.

Design

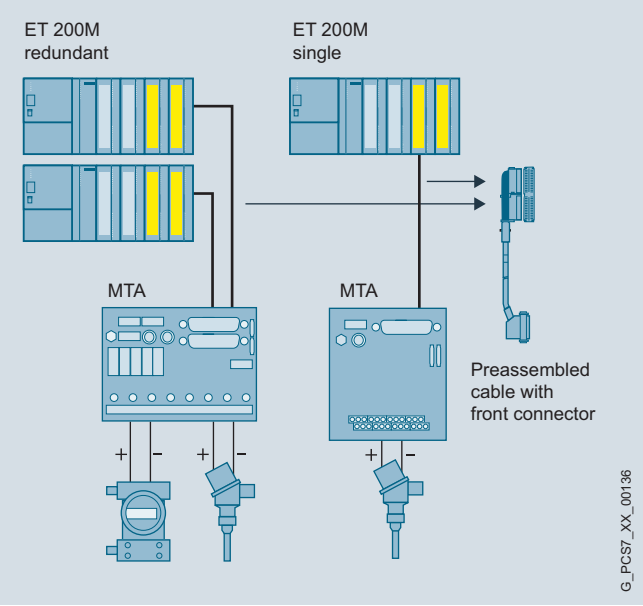

- MTA terminal modules in versions for standard, redundant and safety-related I/O modules of the ET 200M distributed I/O system
- Redundant 24 V DC supply
- Power Monitor Board for diagnostics of the redundant power supply (partially integrated or can be ordered as option)
- 3 or 8 m long preassembled cables for connecting MTA terminal module and ET 200M module, in each case with:
  - 50/25-contact Sub-D socket or 25-contact Sub-D plug, for connection to MTA terminal
  - 40/20-pole Siemens front connector, female version, for connection to ET 200M module
- Screw terminals for the 1:1 connection of field devices, sensors and actuators
- Protection of channels frequently by fuse or electronic current limitation, partially with LED display
- Test and release as SIMATIC PCS 7 system component with corresponding approvals (FM, UL, CE, ATEX, TÜV)

Design (continued)

Product overview with information on combinable ET 200M modules and connection cables

MTA type	Input/output area	Article No. of MTA and accessories	Article No. of ET 200M module	Article No. of connecting cable	I/O redundancy
8 channels, AI	1 ... 5 V; ± 5 V; ± 10 V; 0 ... 20 mA; 4 ... 20 mA; ± 20 mA	6ES7 650-1AA52-2XX0[1)]	6ES7 331-7NF00-0AB0 (from product version 5)	6ES7 922-3BD00-0BA0 (3 m) 6ES7 922-3BJ00-0BA0 (8 m)	Yes
8 channels, AI	1 ... 5 V; ± 5 V; ± 10 V; 0 ... 20 mA; 4 ... 20 mA; ± 20 mA	6ES7 650-1AA52-2XX0[1)]	6ES7 331-7NF10-0AB0 (from product version 8)	6ES7 922-3BD00-0BB0 (3 m) 6ES7 922-3BJ00-0BB0 (8 m)	Yes
8 channels, AO	0 ... 20 mA; 4 ... 20 mA	6ES7 650-1AB51-2XX0	6ES7 332-5HF00-0AB0 (from product version 3)	6ES7 922-3BD00-0AS0 (3 m) 6ES7 922-3BJ00-0AS0 (8 m)	Yes
8 channels, AI HART	0 ... 20 mA (without use of HART) 4 ... 20 mA (with/without use of HART)	6ES7 650-1AA61-2XX0[1)]	6ES7 331-7TF01-0AB0	6ES7 922-3BD01-0AM0 (3 m) 6ES7 922-3BJ01-0AM0 (8 m)	Yes
8 channels, AO HART	0 ... 20 mA (with/without use of HART) 4 ... 20 mA (with/without use of HART)	6ES7 650-1AB61-2XX0	6ES7 332-8TF01-0AB0	6ES7 922-3BD01-0AM0 (3 m) 6ES7 922-3BJ01-0AM0 (8 m)	Yes
8 channels, AI TC	Thermocouple types B, C, N, E, R, S, J, L, T, K, U	6ES7 650-1AF51-2XX0	6ES7 331-7PF10-0AB0 (from product version 4) or 6ES7 331-7PF11-0AB0	6ES7 922-3BD00-0AS0 (3 m) 6ES7 922-3BJ00-0AS0 (8 m)	No
8 channels, AI RTD	Resistance thermometers Pt100, Pt200, Pt500, Pt1000, Ni100, Ni120, Ni200, Ni500, Ni1000, Cu10	6ES7 650-1AG51-2XX0	6ES7 331-7PF00-0AB0 (from product version 8) or 6ES7 331-7PF01-0AB0	6ES7 922-3BD00-0AS0 (3 m) 6ES7 922-3BJ00-0AS0 (8 m)	No
16 channels, DO	24 V DC, 0.5 A	6ES7 650-1AD11-2XX0	6ES7 322-8BH10-0AB0	6ES7 922-3BD00-0AT0 (3 m) 6ES7 922-3BJ00-0AT0 (8 m)	Yes
6 channels F-AI HART (safety-related)	0 ... 20 mA (without use of HART); 4 ... 20 mA (with/without use of HART)	6ES7 650-1AH62-5XX0[1)]	6ES7 336-4GE00-0AB0	6ES7 922-3BD00-0AU0 (3 m) 6ES7 922-3BJ00-0AU0 (8 m)	Yes
16 channels, DI	24 V DC	6ES7 650-1AC11-3XX0	6ES7 321-7BH01-0AB0 (from product version 2)	6ES7 922-3BD01-0AM0 (3 m) 6ES7 922-3BJ01-0AM0 (8 m)	Yes
24 channels F-DI (safety-related)	24 V DC	6ES7 650-1AK11-7XX0	6ES7 326-1BK00-0AB0, 6ES7 326-1BK01-0AB0 or 6ES7 326-1BK02-0AB0	6ES7 922-3BD00-0AS0 (3 m) 6ES7 922-3BJ00-0AS0 (8 m)	Yes
10 channels F-DO (safety-related)	24 V DC, 2 A	6ES7 650-1AL11-6XX0	6ES7 326-2BF01-0AB0 (from product version 2) or 6ES7 326-2BF10-0AB0	6ES7 922-3BD00-0AN0 (3 m) 6ES7 922-3BJ00-0AN0 (8 m)	Yes
16 channels DO relay	120 … 230 V AC, 5 A; 24 V DC, 5 A	6ES7 650-1AM30-3XX0	6ES7 322-8BH01-0AB0 or 6ES7 322-8BH10-0AB0	6ES7 922-3BD00-0AS0 (3 m) 6ES7 922-3BJ00-0AS0 (8 m)	Yes
10 channels F DO relays (safety-related)	120 … 230 V AC, 5 A; 24 V DC, 5 A	6ES7 650-1AM31-6XX0	6ES7 326-2BF01-0AB0 (from product version 2) or 6ES7 326-2BF10-0AB0	6ES7 922-3BD00-0AS0 (3 m) 6ES7 922-3BJ00-0AS0 (8 m)	Yes

[1)] These new terminal modules can no longer deliver a 24 V DC current for feeding 4-wire transmitters. You require an additive terminal module MTA power supply 24 V DC (Order No. 6ES7 650-1BE10-3XX0) if you wish to continue supplying 4-wire transmitters centrally per MTA and redundant with 24 V DC.

Ordering data

	Article No.
MTA terminal modules for SIMATIC PCS 7	
MTA AI terminal module, 8-channel Terminal module for connection of field devices/sensors to a single or two redundant ET 200M analog input modules 6ES7331-7NF00-0AB0 or 6ES7331-7NF10-0AB0 Input range: 1 to 5 V; ± 5 V; ± 10 V and 0/4 ... 20 mA; ± 20 mA Note: 4-wire devices must be supplied separately with current.	**6ES7650-1AA52-2XX0**
MTA AO terminal module, 8-channel Terminal module for connection of field devices/actuators to a single or two redundant ET 200M analog output modules 6ES7332-5HF00-0AB0 Output range: 0/4 ... 20 mA	**6ES7650-1AB51-2XX0**
MTA AI HART terminal module, 8-channel Terminal module for connection of field devices/sensors to a single or two redundant ET 200M analog input modules 6ES7331-7TF01-0AB0 Input range: 0 ... 20 mA (without use of HART), 4 ... 20 mA (with/without use of HART) Note: 4-wire devices must be supplied separately with current.	**6ES7650-1AA61-2XX0**
MTA AO HART terminal module, 8-channel Terminal module for connection of field devices/actuators to a single or two redundant ET 200M analog output modules 6ES7332-8TF01-0AB0 Output range: 0 to 20 mA (with/without use of HART), 4 ... 20 mA (with/without use of HART)	**6ES7650-1AB61-2XX0**
MTA AI TC terminal module, 8-channel Terminal module for connection of field devices/sensors to a single ET 200M analog input module 6ES7331-7PF10-0AB0 or 6ES7331-7PF11-0AB0 Input range: Thermocouple types B, C, N, E, R, S, J, L, T, K, U	**6ES7650-1AF51-2XX0**
MTA AI RTD terminal module, 8-channel Terminal module for connection of field devices/sensors to a single ET 200M analog input module 6ES7331-7PF00-0AB0 or 6ES7331-7PF01-0AB0 Measuring range: Resistance thermometers Pt100, Pt200, Pt500, Pt1000, Ni100, Ni120, Ni200, Ni500, Ni1000, Cu10	**6ES7650-1AG51-2XX0**
MTA DO terminal module, 16-channel Terminal module for connection of field devices/actuators to a single or two redundant ET 200M digital output modules 6ES7322-8BH10-0AB0 Output range: 24 V DC, 0.5 A	**6ES7650-1AD11-2XX0**

	Article No.
MTA F-AI HART terminal module, 6-channel Terminal module for connection of field devices/sensors to a single or two redundant safety-related ET 200M analog input modules 6ES7336-4GE00-0AB0 Input range: 0 ... 20 mA (without use of HART), 4 ... 20 mA (with/without use of HART) Note: 4-wire devices must be supplied separately with current.	**6ES7650-1AH62-5XX0**
MTA DI terminal module, 16-channel Terminal module for connection of field devices/sensors to a single or two redundant ET 200M digital input modules 6ES7321-7BH01-0AB0 Input range: 24 V DC	**6ES7650-1AC11-3XX0**
MTA F-DI terminal module, 24-channel Terminal module for connection of field devices/sensors to a single or two redundant safety-related ET 200M digital input modules 6ES7326-1BK00-0AB0, 6ES7326-1BK01-0AB0 or 6ES7326-1BK02-0AB0 Input range: 24 V DC	**6ES7650-1AK11-7XX0**
MTA F-DO terminal module, 10-channel Terminal module for connection of field devices/actuators to a single or two redundant safety-related ET 200M digital output modules 6ES7326-2BF01-0AB0 or 6ES7326-2BF10-0AB0 Output range: 24 V DC, 2A	**6ES7650-1AL11-6XX0**
MTA DO Relay terminal module, 16-channel Terminal module for connection of field devices/actuators to a single or two redundant ET 200M digital output modules 6ES7322-8BH01-0AB0 or 6ES7322-8BH10-0AB0 Output range: 120 to 230 V AC, 5 A; 24 V DC, 5 A	**6ES7650-1AM30-3XX0**
MTA F-DO Relay terminal module, 10-channel Terminal module for connection of field devices/actuators to a single or two redundant safety-related ET 200M digital output modules 6ES7326-2BF01-0AB0 or 6ES7326-2BF10-0AB0 Output range: 120 to 230 V AC, 5 A; 24 V DC, 5 A	**6ES7650-1AM31-6XX0**

Ordering data

	Article No.
Separate power supply for field devices, for example 4-wire transmitter	
MTA terminal module 24 V DC power supply, 16-channel Terminal module for the redundant power supply of field devices separated from the signal transmission Output range: 24 V DC, 0.5 A	6ES7650-1BE10-3XX0
Pre-assembled cable for connection of ET 200 module and MTA terminal module	
Connecting cable with 40-pin front connector for ET 200M and 50-pin Sub-D socket for MTA Lengths:	
• 3 m	6ES7922-3BD00-0AS0
• 8 m	6ES7922-3BJ00-0AS0
Connecting cable with 40-pin front connector for ET 200M and 25-pin Sub-D socket for MTA Lengths:	
• 3 m	6ES7922-3BD00-0BA0
• 8 m	6ES7922-3BJ00-0BA0
Connecting cable with 40-pin front connector for ET 200M and 25-pin Sub-D socket for MTA Lengths:	
• 3 m	6ES7922-3BD00-0BB0
• 8 m	6ES7922-3BJ00-0BB0
Connecting cable with 40-pin front connector for ET 200M and 25-pin Sub-D plug for MTA Lengths:	
• 3 m	6ES7922-3BD00-0AT0
• 8 m	6ES7922-3BJ00-0AT0

	Article No.
Connecting cable with 40-pin front connector for ET 200M and 25-pin Sub-D socket for MTA Lengths:	
• 3 m	6ES7922-3BD00-0AN0
• 8 m	6ES7922-3BJ00-0AN0
Connecting cable with 20-pin front connector for ET 200M and 25-pin Sub-D socket for MTA Lengths:	
• 3 m	6ES7922-3BD01-0AM0
• 8 m	6ES7922-3BJ01-0AM0
Connecting cable with 20-pin front connector for ET 200M and 50-pin Sub-D socket for MTA Lengths:	
• 3 m	6ES7922-3BD00-0AU0
• 8 m	6ES7922-3BJ00-0AU0
Accessories	
Power monitor board (PMB) for display of status of redundant MTA power supply	6ES7650-1BA02-0XX0

More information

Detailed information on the MTA terminal modules can be found in the manual "ET 200M Marshalled Termination Assemblies Remote I/O Modules".

Overview

Within the SIMATIC ET 200 range, ET 200M represents the main series of distributed I/O systems for process control applications with SIMATIC PCS 7.

The ET 200M I/O system offers a comprehensive range of I/O modules of S7-300 design, including ones with special I&C functions:

- Standard analog and digital modules
- Redundant I/O modules
- I/O modules with enhanced diagnostics capability
- Ex I/O modules
- Controller and counter modules
- HART modules
- F-modules for safety-related applications

When using active bus modules, faulty I/O modules can be replaced while the plant is in operation (RUN) without influencing adjacent modules (hot swapping function).

The following actions are possible with the automation system in RUN:

- Adding new modules to the station
- Re-configuration of modules
- Addition of ET 200M stations
- Configuration of connected HART field devices with SIMATIC PDM

Note:

Apart from these selected modules, it is also possible to use - with limitations in functions - all other I/O modules from the current range of S7-300 signal modules.

Design

An ET 200M remote I/O station comprises:

- 1 or 2 (redundant) power supply modules (can be omitted in the case of a central 24 V DC supply for the plant)
- Up to 2 interface modules:
  - 1 or 2 (redundant) IM 153-2 High Feature for PROFIBUS DP connection or
  - 1 IM 153-4 PN High Feature for PROFINET connection
- Up to 12 I/O modules for connection of sensors/actuators

All I/O modules have optical electrical isolation from the backplane bus. Up to 12 I/O modules can connected to an IM 153-2 High Feature or IM 153-4 PN High Feature interface module. The IM 153-2 High Feature interface modules can also be configured redundantly.

In addition to the standard SIMATIC S7 I/O modules, special I/O modules with diagnostics capability offer the following functions, among others:

- Channel-based diagnostics, e.g. open-circuit, short-circuit, limit violations
- Internal module monitoring, e.g. configuration error, RAM error, tripped fuse
- Flatter monitoring for sensors
- Pulse stretching
- Output of a selectable substitute value on failure of the central processing unit

In the event of a fault, the modules with diagnostics capability automatically pass on the corresponding message to the operator station, permitting fast and simple troubleshooting.

The ET 200M stations can be used in standard environments and also in Ex zone 2/22. The actuators/sensors can be positioned in Ex zone 1/21 when suitable Ex input/output modules are used. Hot swapping of I/O modules within Ex zone 2 is allowed with the right permit (e.g. fire certificate).

Technical specifications

You can find detailed technical data on the ET 200M and S7-300 I/O modules in the following places:

- Catalog ST 70, Chapter "IO Systems" or
- Industry Mall/CA 01 under "Automation technology - Automation systems - SIMATIC industrial automation systems - IO systems - SIMATIC ET 200 systems for control cabinets" – SIMATIC ET 200M"

Options

SIPLUS extreme range for extended temperature ranges and corrosive environments

The "standard" properties of an individual device or system are often insufficient for harsh environmental conditions, applications in corrosive environments or extreme temperature ranges. Depending on the location of use, the result could be limitations in functionality or operational safety or even total failure of the plant.

The SIPLUS extreme range offers individually adapted standard products which permit retention of the functionality of your plant or process even under extreme conditions of use. These include:

- Ambient temperature range from -25 to +60/+70 °C
- Condensation, high humidity
- Increased mechanical stress
- Extreme loading by Media, e.g. toxic atmospheres
- Voltage ranges deviating from the standard
- Increased degree of protection (dust, water)

You can find a summary of the available range of products classified according to their special properties on the Internet. The corresponding SIPLUS product is assigned there to the standard product:

www.siemens.com/siplus

Note:

SIPLUS products are also included in the ST 70 Catalog.

Overview

You can use the PS 307 or PS 305 load power supplies as the power supply module for the ET 200M. You can select different input voltages and output currents (120/230 V AC with 2 A, 5 A or 10 A or 24 to 110 V DC with 2 A) depending on the application.

With a redundant ET 200M configuration, it is also recommendable to have a redundant 24 V DC supply, e.g. with two PS 307 / PS 305 load power supplies.

Ordering data

	Article No.
PS 307 load power supply with power connector	
• 120/230 V AC; 24 V DC	
- 2 A; 40 mm wide	**6ES7307-1BA01-0AA0**
- 5 A; 60 mm wide	**6ES7307-1EA01-0AA0**
- 5 A, extended temperature range; 80 mm wide	**6ES7307-1EA80-0AA0**
- 10 A, 80 mm wide	**6ES7307-1KA02-0AA0**
PS 305 load power supply with power connector	
• 24/48/60/110 V DC; 24 V DC	
- 2 A, extended temperature range; 80 mm wide	**6ES7305-1BA80-0AA0**

Overview

Interface module IM 153-2 High Feature Outdoor for PROFIBUS connection

Interface module for the PROFIBUS connection

The IM 153-2 High Feature and IM 153-2 High Feature Outdoor (electrical PROFIBUS DP transmission mode) interface modules are available for connecting the ET 200M remote I/O station to the PROFIBUS DP fieldbus. Depending on the fieldbus configuration (single/redundant), the ET 200M remote I/O station can be connected via one single or two redundant interface modules.

IM 153-4 High Feature interface module for PROFINET connection

Interface module for PROFINET connection

The IM 153-4 PN High Feature interface module is used to connect the ET 200M remote I/O station to PROFINET via copper cables (RJ45). It autonomously handles communication between the I/O modules and the higher-level PROFINET I/O controller.

Function

IM 153-2 High Feature and IM 153-2 High Feature Outdoor

The IM 153-2 High Feature and IM 153-2 High Feature Outdoor support the following functions:

- HART configuring of intelligent field devices
- Configuration of ET 200M I/Os in RUN mode of the automation system
- Connection to redundant automation systems
- Use of ET 200M function modules (controller and counter modules)
- Operation of up to 12 I/O modules per remote I/O station
- Time stamping (SOE) with the safety-related SM 326F digital input module (F-DI24)
- Transmission of additional values with HART secondary variables of the HART SM 331 and SM 332 analog modules (up to 4 per channel or up to 8 per module)

IM 153-4 PN High Feature

- Integrated 2-port switch
- Baud rate 10 Mbps / 100 Mbps (Autonegotiation/Full Duplex)
- Operation of up to 12 I/O modules per remote I/O station
- I&M functions in accordance with PROFIBUS International Guidelines, order no. 3.502, version V1.1

Note:

In order to be able to use the hot swap function, use of the active bus module and the mounting rail for hot swap is necessary (see under the following section "Accessories", page 11/26).

Ordering data

	Article No.
Interface module for the PROFIBUS connection	
IM 153-2 High Feature Outdoor Interface module for PROFIBUS DP for ET 200M, PA Link and Y-Link; redundancy capable; conformal coating, IP20 degree of protection; permissible operating temperature -25 ... +60 °C	**6ES7153-2BA70-0XB0**
IM 153-2 High Feature Interface module for PROFIBUS DP for ET 200M; redundancy capable; permissible operating temperature 0 ... +60 °C	**6ES7153-2BA10-0XB0**
Interface module for the PROFINET connection	
IM 153-4 PN High Feature Interface for connecting an ET 200M station to PROFINET	**6ES7153-4BA00-0XB0**
Accessories	
Micro Memory Card 64 KB	**6ES7953-8LF30-0AA0**

Overview

Following components are available as accessories for the ET 200M:

- Bus modules for connection/disconnection of modules during operation (hot swapping)
- DIN rail for connection and disconnection of modules during operation
- Covers for backplane bus and bus modules
- Front connectors
- Ex partition for ET 200M
- LK 393 cable guide
- DM 370 dummy module

Ex partition for ET 200M

Ex partition

A mechanical isolation is required between the IM 153 interface module and the first Ex I/O module. For the hot swapping function, an Ex partition is installed which guarantees the prescribed isolation distance between non-intrinsically-safe and intrinsically-safe areas of an ET 200M remote I/O station.

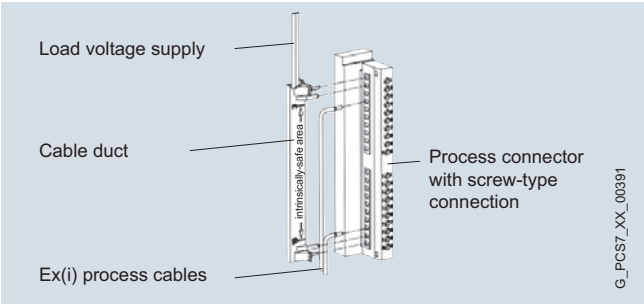

LK 393 cable guide

LK 393 cable guide

The LK 393 cable duct provides the prescribed isolation between the load voltage input and the intrinsically safe inputs/outputs. The cable duct is easy to fit following insertion of the load voltage inputs L+.

DM 370 Dummy Module

DM 370 Dummy Module

- Reservation of slots for unconfigured I/O modules
- Retention of design and address assignment when replacing by I/O module

Design

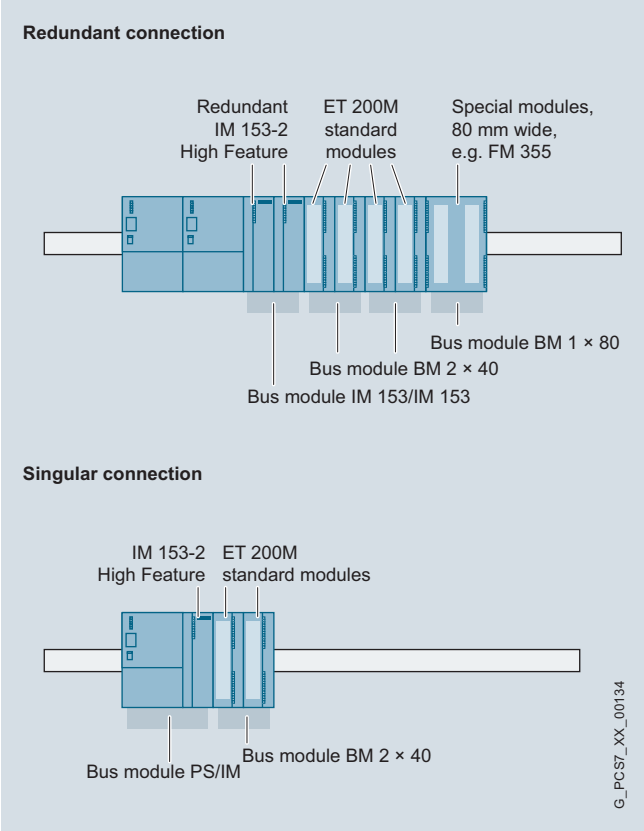

The figure shows the use of the various bus modules for hot swapping modules - at the top for a redundant connection, at the bottom for a non-redundant connection.

Ordering data

	Article No.
Bus modules for hot swapping	
• BM PS/IM for load current supply and IM 153, including 1 bus module cover	**6ES7195-7HA00-0XA0**
• BM 2 × 40 for 2 modules, width 40 mm	**6ES7195-7HB00-0XA0**
• BM 1 × 80 for 1 module, width 80 mm	**6ES7195-7HC00-0XA0**
• BM IM/IM Outdoor for 2 IM 153-2 for configuring redundant systems	**6ES7195-7HD80-0XA0**
• BM IM/IM for 2 IM 153-2/-2 FO for configuring redundant systems	**6ES7195-7HD10-0XA0**
DIN rail for hot swapping	
• 482 mm long (19 inches)	**6ES7195-1GA00-0XA0**
• 530 mm long	**6ES7195-1GF30-0XA0**
• 620 mm long	**6ES7195-1GG30-0XA0**
• 2 000 mm long, for vertical installation	**6ES7195-1GC00-0XA0**
Covers Package with 4 backplane bus covers and 1 bus module cover	**6ES7195-1JA00-0XA0**
Front connector (1 unit)	
• 20-pin, with screw contacts	**6ES7392-1AJ00-0AA0**
• 20-pin, with spring contacts	**6ES7392-1BJ00-0AA0**
• 40-pin, with screw contacts	**6ES7392-1AM00-0AA0**
• 40-pin, with spring contacts	**6ES7392-1BM01-0AA0**

	Article No.
Front connector for Ex analog input module 6ES7331-7SF00-0AB0 (1 unit) • 20-pin, with screw contacts Enables an accuracy of ±1.5 °K for the internal cold junction temperature when taking thermocouple temperature measurements in the "internal compensation" measuring mode at ambient temperatures of 0 to 60 °C	**6ES7392-1AJ20-0AA0**
Ex partition for ET 200M • Separation of IM 153 and downstream Ex modules within an ET 200M line • Mixed operation of non-Ex and Ex modules within an ET 200M line • For supporting the hot swapping function in connection with IM 153-2	**6ES7195-1KA00-0XA0**
LK 393 cable duct [EEx ib] IIC-conform routing of load voltage cable in front plug, 5 units	**6ES7393-4AA00-0AA0**
DM 370 dummy module including bus connector, labeling strips	**6ES7370-0AA01-0AA0**

Overview

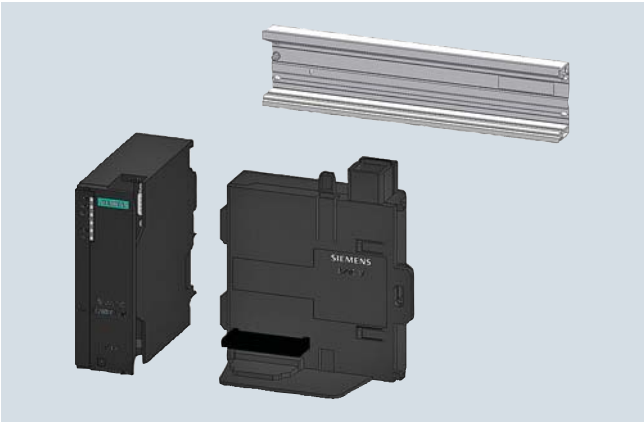

I/O subsystem for ET 200M

The following pre-assembled bundles are available for the ET 200M:

- I/O subsystem for PA Link or ET 200M stations with up to 8 I/O modules suitable for hot swapping, consisting of:
  - DIN rail for active bus modules, 482 mm long (19 inches)
  - PS/IM bus module
  - PROFIBUS DP interface IM 153-2 High Feature Outdoor
- I/O subsystem extended for PA Link or ET 200M stations with up to 12 I/O modules suitable for hot swapping, consisting of:
  - DIN rail for active bus modules, 620 mm long
  - PS/IM bus module
  - PROFIBUS DP interface IM 153-2 High Feature Outdoor
- RED I/O subsystem for operation of a PA Link or an ET 200M station on a redundant automation system of the S7-400 series, suitable for hot swapping, consisting of:
  - 2 PROFIBUS DP interface modules IM 153-2 High Feature Outdoor
  - 1 active bus module IM/IM Outdoor

Ordering data

	Article No.
I/O subsystem for PA Link or ET 200M For PA Link or for ET 200M stations with up to 8 I/O modules, suitable for hot swapping, consisting of: • DIN rail for active bus modules, 482 mm long (19 inches) • PS/IM bus module • PROFIBUS DP interface IM 153-2 High Feature Outdoor	**6ES7654-0XX10-1XA0**
I/O subsystem extended for PA Link or ET 200M For PA Link or for ET 200M stations with up to12 I/O modules, suitable for hot swapping, consisting of: • DIN rail for active bus modules, 620 mm long • PS/IM bus module • PROFIBUS DP interface IM 153-2 High Feature Outdoor	**6ES7654-0XX10-1XB0**
RED I/O subsystem for PA Link or ET 200M For operation of a PA Link or an ET 200M station on a redundant automation system of the S7-400 series, suitable for hot swapping, consisting of: • 2 PROFIBUS DP interfaces IM 153-2 High Feature Outdoor • 1 active bus module IM/IM Outdoor	**6ES7654-0XX20-0XA0**

Overview

Digital input modules

- Simple signal modules for DC and AC voltage
- Modules with diagnostics capability that automatically output a corresponding message to the operator system in the event of a fault

Digital output modules

- Simple signal modules for DC and AC voltage with different output currents per channel, where various relay modules are available for larger output currents and voltages
- Modules with diagnostics capability which provide information for fault diagnosis and also permit parameterizable reactions to failure of the automation system

Digital input/output modules

- Standard signal module for DC voltage (24 V DC) with 8 digital inputs and 8 digital outputs
- For connection of switches, 2-wire proximity switches (BERO), solenoid valves, contactors, signal lamps

Ordering data

Digital input modules

	Article No.
SM 321 for floating contacts (supply with DC voltage)	
16 inputs, 24 V DC **Redundancy optional** (module-granular redundancy) • Isolated in groups of 16 • Front connector required: 20-pin	**6ES7321-1BH02-0AA0**
16 inputs, 24 V DC • Isolated in groups of 16; active low • Front connector required: 20-pin	**6ES7321-1BH50-0AA0**
16 inputs, 24 V DC, high-speed • Isolated in groups of 16 • 0.05 ms input delay • Front connector required: 20-pin	**6ES7321-1BH10-0AA0**
32 inputs, 24 V DC **Redundancy optional** (module-granular redundancy) • Isolated in groups of 16 • Front connector required: 40-pin	**6ES7321-1BL00-0AA0**
16 inputs, 48 ... 125 V DC • Isolated in groups of 8 • Front connector required: 20-pin	**6ES7321-1CH20-0AA0**
64 inputs, 24 V DC • Isolated in groups of 16; active high/low Note: 2 connection cables 6ES7392-4B..0-0AA0 and 2 terminal blocks 6ES7392-1.N00-0AA0 required per module.	**6ES7321-1BP00-0AA0**

	Article No.
S7-300 cable for 64-channel modules; 2 units	
• 1 m	**6ES7392-4BB00-0AA0**
• 2.5 m	**6ES7392-4BC50-0AA0**
• 5 m	**6ES7392-4BF00-0AA0**
Terminal block for 64-channel modules; 2 units	
• With screw contacts	**6ES7392-1AN00-0AA0**
• With spring-loaded contacts	**6ES7392-1BN00-0AA0**
SM 321 for floating contacts (supply with DC/AC voltage)	
16 inputs, 24...48 V AC/DC • Isolated in groups of 1 • Front connector required: 40-pin	**6ES7321-1CH00-0AA0**
SM 321 for floating contacts (supply with AC voltage)	
32 inputs, 120 V AC • Isolated in groups of 8 • Front connector required: 40-pin	**6ES7321-1EL00-0AA0**
8 inputs, 120/230 V AC **Redundancy optional** (module-granular redundancy) • Isolated in groups of 2 • Front connector required: 20-pin	**6ES7321-1FF01-0AA0**
16 inputs, 120/230 V AC • Isolated in groups of 4 • Front connector required: 20-pin	**6ES7321-1FH00-0AA0**
SM 321 for non-floating contacts (supply with AC voltage)	
8 inputs, 120/230 V AC • Isolated in groups of 1 • Front connector required: 40-pin	**6ES7321-1FF10-0AA0**

Ordering data

	Article No.
SM 321 modules with diagnostics capability (IM 153-2 High Feature interface module required) for isolated contacts (supplied with DC voltage)	
16 inputs, 24 V DC **Redundancy optional** (channel-granular redundancy) • Isolated in groups of 16 • Time stamping in association with IM 153-2 High Feature, accuracy 1 ms, rising or falling edge, can be configured channel-granular • Two short-circuit-proof sensor supplies for 8 channels each • Sensor supply by the module, additional external redundant sensor supply possible • Diagnostics of missing sensor supply for channel group (8 channels) • Diagnostics inside module • Channel-granular wire break monitoring • Front connector required: 20-pin	**6ES7321-7BH01-0AB0**
16 inputs, NAMUR **Redundancy optional** (channel-granular redundancy) • Isolated in groups of 8 • Time stamping in association with IM 153-2 High Feature, accuracy 10 ms, rising or falling edge, can be configured channel-granular • Two sensor supplies (8.2 V DC or 18 V DC each) • Connection of NAMUR sensors or contacts with resistor circuit • Pulse stretching • Channel-granular diagnostics (short-circuit, open-circuit, chatter monitoring, discrepancy with changeover contacts) • Diagnostics inside module • Front connector required: 40-pin	**6ES7321-7TH00-0AB0**
16 inputs, 24 to 125 V DC • Isolated in groups of 16 • Time stamping in association with IM 153-2 High Feature, accuracy 1 ms, rising or falling edge, can be configured channel-granular • Diagnostics inside module • Channel-granular wire break monitoring • Front connector required: 40-pin	**6ES7321-7EH00-0AB0**

Digital output modules

	Article No.
SM 322 for DC voltage Suitable for solenoid valves, contactors, indicator lights, etc.	
8 outputs, 24 V DC / 2 A **Redundancy optional** (channel-granular redundancy) • Isolated in groups of 4 • Front connector required: 20-pin	**6ES7322-1BF01-0AA0**
16 outputs, 24 V DC, 0.5 A • Isolated in groups of 8 • Front connector required: 20-pin	**6ES7322-1BH01-0AA0**
16 outputs, 24 V DC / 0.5 A, high speed • Isolated in groups of 8 • Output delay max. 0.2 ms • Front connector required: 20-pin	**6ES7322-1BH10-0AA0**
32 outputs, 24 V DC / 0.5 A **Redundancy optional** (module-granular redundancy) • Isolated in groups of 8 • Front connector required: 40-pin	**6ES7322-1BL00-0AA0**
8 outputs, 48 ... 125 V DC / 1.5 A • Isolated in groups of 4 • Front connector required: 20-pin	**6ES7322-1CF00-0AA0**
64 outputs, 24 V DC, 0.3 A, source output • Isolated in groups of 16 Note: 2 connection cables 6ES7392-4B..0-0AA0 and 2 terminal blocks 6ES7392-1.N00-0AA0 required per module.	**6ES7322-1BP00-0AA0**
64 outputs, 24 V DC, 0.3 A, sink output • Isolated in groups of 16 Note: 2 connection cables 6ES7392-4..0-0AA0 and 2 terminal blocks 6ES7392-1.N00-0AA0 required per module.	**6ES7322-1BP50-0AA0**
S7-300 cable for 64-channel modules; 2 units	
• 1 m	**6ES7392-4BB00-0AA0**
• 2.5 m	**6ES7392-4BC50-0AA0**
• 5 m	**6ES7392-4BF00-0AA0**
Terminal block for 64-channel modules; 2 units	
• With screw contacts	**6ES7392-1AN00-0AA0**
• With spring-loaded contacts	**6ES7392-1BN00-0AA0**

Ordering data

	Article No.
SM 322 for AC voltage Suitable for AC solenoid valves, contactors, motor starters, small-power motors and indicator lights	
8 outputs, 120/230 V AC / 2 A **Redundancy optional** (module-granular redundancy) • Isolated in groups of 4 • Front connector required: 20-pin	**6ES7322-1FF01-0AA0**
16 outputs, 120/230 V AC, 1 A • Isolated in groups of 8 • Front connector required: 20-pin	**6ES7322-1FH00-0AA0**
32 outputs, 120/230 V AC, 1 A • Isolated in groups of 8 • Front connector required: 2 x 20-pin	**6ES7322-1FL00-0AA0**
SM 322 for relay output Suitable for AC/DC solenoid valves, contactors, motor starters, small-power motors, and indicator lights	
8 outputs, 24 ... 120 V DC, 48 ... 230 V AC, max. 2 A • Isolated in groups of 2 • Front connector required: 20-pin	**6ES7322-1HF01-0AA0**
8 outputs, 24 ... 120 V DC, 48 ... 230 V AC, max. 5 A • Isolated in groups of 1 • Front connector required: 40-pin	**6ES7322-1HF10-0AA0**
16 outputs, 24 ... 120 V DC, 48 ... 230 V AC, max. 2 A • Isolated in groups of 8 • Front connector required: 20-pin	**6ES7322-1HH01-0AA0**
SM 322 modules with diagnostics capability (with channel and module diagnostics) for DC voltage Suitable for solenoid valves, DC contactors and indicator lights	
8 outputs, 24 V DC / 0.5 A **Redundancy optional** (module-granular redundancy) • Isolated in groups of 8 • 2 connections per output (with and without series diode) • Connection of a default value per channel in the event of CPU stop (configurable) • Wire break monitoring per channel • Load voltage monitoring per channel • Short-circuit monitoring to M/L+ per channel • Module-internal diagnostics functions • Front connector required: 20-pin	**6ES7322-8BF00-0AB0**
16 outputs, 24 V DC / 0.5 A **Redundancy optional** (module-granular redundancy) • Isolated in groups of 4 • Connection of a default value per channel in the event of CPU stop (configurable) • Wire break monitoring per channel (with 0 and 1 signals) • Signaling of output overload • Discrepancy error monitoring • Load voltage monitoring or ground monitoring per channel group • Short-circuit monitoring to M/L+ per channel group • Module-internal diagnostics functions • Front connector required: 40-pin	**6ES7322-8BH10-0AB0**

	Article No.
For AC voltage Suitable for AC solenoid valves, contactors, motor starters, small-power motors and indicator lights	
8 outputs, 120/230 V AC, 2 A • Isolated in groups of 1 • Connection of a default value per channel in the event of CPU stop (configurable) • Module-internal diagnostics functions • Front connector required: 40-pin	**6ES7322-5FF00-0AB0**
16 outputs, 24/48 V DC, 0.5 A • Isolated in groups of 1 • Connection of a default value per channel in the event of CPU stop (configurable) • Module-internal diagnostics functions • Front connector required: 40-pin	**6ES7322-5GH00-0AB0**
For relay output Suitable for AC/DC solenoid valves, contactors, motor starters, small-power motors and indicator lights	
8 outputs, 24...120 V DC, 24...230 V AC / max. 5 A • Isolated in groups of 1 • With RC suppressor element for protection of contacts per channel • Connection of a default value per channel in the event of CPU stop (configurable) • Module-internal diagnostics functions • Front connector required: 40-pin	**6ES7322-5HF00-0AB0**
Digital input/output modules	
SM 323 for DC voltage Suitable for switches, BERO proximity switches, solenoid valves, contactors, indicator lights, etc. • 8 inputs 24 V DC - Suitable for connection of 2-wire proximity switches (BERO) as sensors • 8 outputs, 24 V DC, 0.5 A • Inputs and outputs electrically isolated in groups of 8 • Front connector required: 20-pin	**6ES7323-1BH01-0AA0**

Overview

Analog input modules

- Multi-function modules for current, voltage and temperature measurements
- Special, highly accurate modules for current and voltage measurements or temperature measurements

All modules automatically supply channel-specific and module-internal diagnostics data, except module 6ES7 331-1KF02-0AB0. With this module, a channel failure is detected by the SIMATIC PCS 7 analog driver block.

The channels of the analog input modules can be parameterized in groups independent of each other.

Analog output modules

- Modules with 12-bit resolution and different numbers of channels
- Highly accurate module with 15-bit resolution

The analog output modules can be parameterized in groups independent of each other, and automatically provide all channel-specific and module-internal diagnostics information.

Ordering data

Analog input modules

	Article No.
SM 331 modules for current, voltage and temperature measurements	
8 inputs, individually configurable • Resolution 12 bit + sign • Current measurement (8 channels) 0/4 ... 20 mA, ±20 mA (2 wires with external supply or 4 wires) • Voltage measurement (8 channels) 1 ... 5 V, 0 ... 10 V, ±50 mV, ±500 mV, ±1 V, ±5 V, ±10 V • Resistance thermometer Pt100, Ni100, Ni1000, LG-Ni1000 (8 channels; 2, 3 or 4 wires) • Front connector required: 40-pin	**6ES7331-1KF02-0AB0**
8 inputs in 4 channel groups Redundancy optional (module-granular redundancy) • Changeover of measurement type by range module per channel group • Resolution 14 bit + sign • Current measurement (8 channels) 0 ... 20 mA, ±3.2 mA, ±10 mA, ±20 mA (4 wires) or 4 ... 20 mA (2 or 4 wires) • Voltage measurement (8 channels) 1 ... 5 V, 0 ... 10 V, ±50 mV, ±500 mV, ±1 V, ±5 V, ±10 V • Resistance thermometer Pt100, Ni100 (4 channels, 2 or 4 wires) • Thermocouples type E, N, J, K, L (8 channels), internal compensation or external compensation with compensating box or 0 °C cold junction • Wire break monitoring • Internal module diagnostics • Front connector required: 20-pin	**6ES7331-7KF02-0AB0**
2 inputs in 1 channel group • Changeover of measurement type by range module • Adjustable resolution per channel group: 9/12/14 bits + sign • Current measurement (2 channels) 0 ... 20 mA, ±3.2 mA, ±10 mA, ±20 mA (4 wires) or 4 ... 20 mA (2 or 4 wires) • Voltage measurement (2 channels) 1 ... 5 V, ±80 mV, ±250 mV, ±500 mV, ±1 V, ±2.5 V, ±5 V, ±10 V • Resistance thermometer Pt100, Ni100 (1 channel, 2 or 4 wires) • Thermocouples type E, N, J, K, L (2 channels), internal compensation or external compensation with compensating box or 0 °C cold junction • Wire break monitoring • Internal module diagnostics • Front connector required: 20-pin	**6ES7331-7KB02-0AB0**

Ordering data

	Article No.
SM 331 modules for current and voltage measurements	
8 inputs in 4 channel groups, high speed • Resolution 13 bit + sign • Measurement type and range selection adjustable per channel group • Current measurement 0 ... 20 mA, ±20 mA (4 wires) or 4 ... 20 mA (2 or 4 wires) • Voltage measurement 1 ... 5 V, ±1 V, ±5 V, ±10 V • Limit monitoring adjustable for 2 channels • Fast updating of measured value • Supporting of isochronous mode • Internal module diagnostics • Front connector required: 20-pin	**6ES7331-7HF01-0AB0**
8 inputs in 4 channel groups Redundancy optional (channel-granular redundancy) • Resolution 15 bit + sign • Current measurement 0/ 4 ... 20 mA, ±20 mA (8 channels; 2 or 4 wires) • Voltage measurement 1 ... 5 V, ±5 V, ±10 V (8 channels) • Wire break monitoring with 4 ... 20 mA and 1 ... 5 V • Internal module diagnostics • Front connector required: 40-pin	**6ES7331-7NF00-0AB0**
8 inputs in 4 channel groups Redundancy optional (channel-granular redundancy) • Resolution 15 bit + sign • Fast module cycle (min. 10 ms for 4 channels) • Current measurement 0/ 4 ... 20 mA, ±20 mA (8 channels, 2 wires with external supply or 4 wires) • Voltage measurement 1 ... 5 V, ±5 V, ±10 V (8 channels) • Wire break monitoring with 4 ... 20 mA and 1 ... 5 V, ±5 V, ±10 V • Short-circuit-proof • Electrical isolation between channel groups • Internal module diagnostics • Front connector required: 40-pin	**6ES7331-7NF10-0AB0**

	Article No.
SM 331 modules for temperature measurement	
8 inputs in 4 channel groups • Resolution 15 bit + sign • Resistance thermometer Pt100 ... 1000, Ni100 ... 1000, Cu10 (8 channels; 2, 3 or 4 wires) • Resistance measurement 150 Ω, 300 Ω, 600 Ω • Measuring mode (temperature or resistance) and measuring range adjustable per channel group • Short-circuit-proof • Wire break monitoring • Internal module diagnostics • Front connector required: 40-pin	**6ES7331-7PF01-0AB0**
8 inputs in 4 channel groups • Resolution 15 bit + sign • Thermocouples type B, C, N, E, R, S, J, L, T, K, U (8 channels), internal compensation; external compensation with Pt100 through separate inputs possible • Measuring range adjustable per channel group • Fast module cycle (10 ms for 4 channels) • Short-circuit-proof • Wire break monitoring • Internal module diagnostics • Front connector required: 40-pin	**6ES7331-7PF11-0AB0**
6 inputs in 6 channel groups Redundancy optional (channel-granular redundancy) • Resolution 15 bit + sign • Electrical isolation up to 250V AC between the channels • Measuring mode (temperature or voltage) and measuring range adjustable per channel • Temperature measurement with thermocouple type B, C, N, E, R, S, J, L, T, K, U, TxK/ XK (L); internal compensation; external compensation possible with Pt100 • Voltage measurement 25 mV, ±50 mV, ±80 mV, ±250 mV, ±500 mV, ±1 V • Input impedance 10 MΩ each • Programmable diagnostics and diagnostics alarm • Programmable process alarm on limit violation • Calibration possible using SIMATIC PDM • Front connector required: 40-pin	**6ES7331-7PE10-0AB0**

Ordering data

Analog output modules

	Article No.
SM 332 modules for current and voltage outputs	
2 outputs in 2 channel groups • Resolution 12 bit/11 bit + sign • Voltage 1 ... 5 V, 0 ... 10 V; ±10 V (2 channels; 2 or 4 wires) • Current 0/4 ... 20 mA; ±20 mA (2 channels; 2 wires) • Configurable substitute value output in case of CPU stop • Wire break monitoring (only for current) • Short circuit monitoring (only for voltage) • Internal module diagnostics • Front connector required: 20-pin	**6ES7332-5HB01-0AB0**
4 outputs in 4 channel groups **Redundancy optional** (channel-granular redundancy) • Resolution 12 bit/11 bit + sign • Voltage 1 ... 5 V, 0 ... 10 V; ±10 V (4 channels; 4 wires) • Current 0/4 ... 20 mA; ±20 mA (4 channels; 2 wires) • Configurable substitute value output in case of CPU stop • Wire break monitoring (only for current) • Short circuit monitoring (only for voltage) • Internal module diagnostics • Front connector required: 20-pin	**6ES7332-5HD01-0AB0**

	Article No.
8 outputs in 8 channel groups **Redundancy optional** (channel-granular redundancy) • Resolution 12 bit/11 bit + sign • Voltage 1 ... 5 V, 0 ... 10 V; ±10 V (8 channels; 4 wires) • Current 0/4 ... 20 mA; ±20 mA (8 channels; 2 wires) • Configurable substitute value output in case of CPU stop • Wire break monitoring (only for current) • Short circuit monitoring (only for voltage) • Internal module diagnostics • Front connector required: 40-pin	**6ES7332-5HF00-0AB0**
4 outputs in 4 channel groups • Resolution 14/15/16 bit • Voltage 1 ... 5 V, 0 ... 10 V; ±10 V (4 channels; 4 wires) • Current 0/4 ... 20 mA; ±20 mA (4 channels; 2 wires) • Configurable substitute value output in case of CPU stop • Isolated by channel • Internal module diagnostics • Front connector required: 20-pin	**6ES7332-7ND02-0AB0**

Overview

The modules with HART (Highway Addressable Remote Transducer) which can be used in ET 200M remote I/O stations (with IM 153-2 High Feature interface module) permit connection of HART devices to the SIMATIC PCS 7 automation system.

Transmitters and HART actuators that are certified for digital communication with the HART protocol can be connected through these modules.

With 0/4 to 20 mA technology, conventional transmitters/actuators without HART protocol can also be connected.

All modules with HART come with diagnostics capability (channel and module diagnostics). The diagnostics and monitoring functions are directly available in SIMATIC PCS 7. They require no additional engineering. Plain text messages output on the operator station provide information on faults or changes in the HART parameter settings.

Homogenous integration in the SIMATIC Process Device Manager (PDM) and the PCS 7 Asset Management permit intuitive online diagnostics and parameterization of all connected field devices from a central position.

Function

HART is a serial transmission procedure with which additional parameter data such as measuring ranges, attenuation etc. can be sent to transmitters and actuators over a 4 to 20-mA current loop. The HART jobs for each channel can be remotely initiated over the PROFIBUS DP. This usually takes place from the central engineering system of the SIMATIC PCS 7 process control system per SIMATIC PDM.

The modules with HART have the following features:

- Connections compatible with the conventional analog modules of the ET 200M
- Additional communications possibility over the current loop
- Up to 8 analog channels per module (2 analog channels with Ex modules; 6 analog channels with safety-related SM 336 F-AI HART module)
- Each channel is a primary master of the HART protocol
- Selectable input range per channel (AI):
  - 0 to 20 mA (without HART function)
  - ± 20 mA (without HART function, not with Ex module or SM 336 F-AI HART module)
  - 4 to 20 mA (with/without HART function)
- Selectable output range per channel (AO):
  - 0 to 20 mA (with/without HART function; in the case of Ex module, only without HART function)
  - 4 to 20 mA (with/without HART function)

Additional functions of the 6ES7331-7TF01-0AB0 and 6ES7332-8TF01-0AB0 HART analog modules:

- Supplementary HART variables (up to 4 per channel, up to 8 per module) allow the transmission of additional values from/to the HART devices
- Modules can be used redundant (channel-granular redundancy)

Additional functions of the SM 336 F-AI HART module:

- Modules can be used redundant (channel-granular redundancy)
- HART communication can be activated safety-related in online mode, or switched off

Parameterization

- For the analog input modules (AI), it is possible to parameterize e.g. conversion time, input range, limits, alarms, smoothing of measured values
- For the analog output modules (AO), it is possible to parameterize e.g. output range, response on stoppage of AS (CPU), diagnostics
- Remote parameterization (per PROFIBUS DP) of the HART transmitters and actuators with SIMATIC PDM
- It is still possible to parameterize the HART devices using an operator terminal (handheld).

Ordering data

	Article No.
Analog input module SM 331 HART Redundancy optional (channel-granular redundancy) 8 inputs, 0/4 ... 20 mA or ±20 mA • Resolution: 15 bit + sign • Connection of 2-wire or 4-wire transmitters possible • HART (2-wire or 4-wire) • Wire break monitoring • Short-circuit-proof • Front connector required: 20-pin	**6ES7331-7TF01-0AB0**
Analog output module SM 332 HART Redundancy optional (channel-granular redundancy) 8 outputs, 0/4 ... 20 mA • Resolution: 15 bit + sign • For 2-wire actuators • HART (2-wire) • Wire break monitoring • Front connector required: 20-pin	**6ES7332-8TF01-0AB0**

	Article No.
SM 331 HART Ex analog input module [EEx ib] 2 inputs, 0/4 ... 20 mA in 2 channel groups • Individual electrically isolated channels • Resolution: 15 bit + sign • Connection of 2-wire or 4-wire transmitters possible • Wire break monitoring • Short-circuit-proof • HART (2-wire or 4-wire) • Front connector required: 20-pin	
- up to HART revision 5.0	**6ES7331-7TB00-0AB0**
- as of HART revision 5.0	**6ES7331-7TB10-0AB0**
SM 332 HART Ex analog output module [EEx ib] 2 outputs, 0/4 ... 20 mA in 2 channel groups • Individual electrically isolated channels • Resolution: 12 bit + sign • For 2-wire actuators • Wire break monitoring • HART • Front connector required: 20-pin	
- up to HART revision 5.0	**6ES7332-5TB00-0AB0**
- as of HART revision 5.0	**6ES7332-5TB10-0AB0**
SM 336 F-AI HART safety-related analog input module Redundancy optional (channel-granular redundancy) 6 inputs, 0/4 ... 20 mA	For detailed Ordering data, see the section "F digital/analog modules", page 11/38

Overview

The following analog and digital input and output modules are suitable for use in hazardous plants. They separate the non-intrinsically safe electrical circuits of the automation system and the intrinsically safe electrical circuits of the process. Sensors and actuators suitable for placing in zone 1 or 21 and 2 or 22 hazardous areas as well as intrinsically safe equipment compliant with DIN 50020 and [EEx ib] IIC can be operated on these modules.

All Ex modules come with diagnostics capability (channel and module diagnostics).

Ex modules identified by "redundant design possible" (6ES7 321-7RD00-0AB0, 6ES7 322-5SD00-0AB0, 6ES7 331-7RD00-0AB0, 6ES7 332-5RD00-0AB0) can also be configured redundant when used in non-hazardous plants.

Ordering data

	Article No.
Ex digital input modules	
4 NAMUR inputs in 4 channel groups **Redundancy optional** (channel-granular redundancy) • Voltage supply to sensors 8.2 V • Individual electrically isolated channels • Time stamping in association with IM 153-2 High Feature, accuracy 10 ms, rising or falling edge, can be configured channel-granular • Wire break and short-circuit monitoring (directly at the contact for contacts with external resistor circuit) • Internal module diagnostics • Front connector required: 20-pin	**6ES7321-7RD00-0AB0**
Ex digital output modules	
4 outputs, 24 V DC, 10 mA in 4 channel groups **Redundancy optional** (channel-granular redundancy) • Individual electrically isolated channels • Wire break monitoring • Short-circuit monitoring • Internal module diagnostics • Front connector required: 20-pin	**6ES7322-5SD00-0AB0**
4 outputs, 15 V DC / 20 mA in 4 channel groups • Individual electrically isolated channels • Wire break monitoring • Short-circuit monitoring • Internal module diagnostics • Front connector required: 20-pin	**6ES7322-5RD00-0AB0**

	Article No.
Ex analog input modules	
4 inputs, 0/4 ... 20 mA in 4 channel groups **Redundancy optional** (channel-granular redundancy) • Individual electrically isolated channels • Resolution 15 bit + sign • Connection of 2-wire or 4-wire transmitters possible • Wire break monitoring • Measurement range monitoring • Short-circuit-proof • Internal module diagnostics • Front connector required: 20-pin	**6ES7331-7RD00-0AB0**
8 inputs in 4 channel groups • Resolution 15 bit + sign • Thermocouples type T, U, E, J, L, K, N, R, S, B (8 channels) Internal compensation; external compensation with Pt100 (2 channels), compensating box or 0/50 °C cold junction • Resistance thermometer Pt100, Pt200, Ni100 (4 channels; 2-wire or 4-wire, 3-wire Pt100 on request) • Wire break monitoring • Internal module diagnostics • Front connector required: 20-pin Note: A special front connector for the Ex analog input module 6ES7331-7SF00-0AB0 enables greater accuracy when making thermocouple temperature measurements in "Internal compensation" measuring mode (see the section "Accessories", page 11/26).	**6ES7331-7SF00-0AB0**
Ex analog output modules	
4 outputs, 0/4 ... 20 mA in 4 channel groups **Redundancy optional** (channel-granular redundancy) • Individual electrically isolated channels • Resolution 15 bit • For 2-wire transmitters • Wire break monitoring • Internal module diagnostics • Front connector required: 20-pin	**6ES7332-5RD00-0AB0**

For additional Ex modules, refer to the "Analog modules with HART" section, page 11/35.

Overview

The safety functions of the safety-related automation systems are matched to the safety-related I/O modules (F-modules) of the ET 200M distributed I/O system. The F-signal modules (DI/DO/AI) in the ET 200M remote I/O stations comply with safety requirements up to SIL 3 (IEC 61508). They can diagnose both internal and external faults. To this end, they carry out self-tests, e.g. for short-circuit or open-circuit, and automatically monitor the discrepancy time defined in the parameter settings. They are able to guarantee plant safety even if there is a CPU failure in the automation system.

Depending on the version, the input modules support 1oo1 and 1oo2 evaluation on the module. 2oo3 evaluation of three sensors is possible using the corresponding voter block (component of the S7 F block library) within the safety program.

In the event of a faulty output, the digital output modules allow a safe shutdown via a second shutdown path.

Note:

The SM 326 F-DI NAMUR digital input module, Article No. 6ES7326-1RF00-0AB0, does not support PROFINET.

Design

SM 336 F-AI HART analog input module

The safety-related SM 336 F-AI HART analog input module has 6 inputs for current measurements in the range from 0 to 20 mA or 4 to 20 mA, all of which are designed for SIL 3. The compact width of 40 mm means that a relatively high packing density can be achieved for F modules, allowing a design which saves space and costs.

The module can also handle HART communication with appropriate HART field devices. HART communication can be activated safety-related in online mode, or switched off.

Digital output module SM 326 F-DO

The 40-mm wide safety-related SM 326 F-DO digital output module with 10 outputs (24 V DC, 2 A) and parameterizable redundancy extends the range of compact F-modules commenced with the SM 336 F-AI HART. The module features short response times, and can be used in SIL 3 applications even without an isolating module. It supports the "Keep last valid value" function as well as channel-selective passivation.

Options

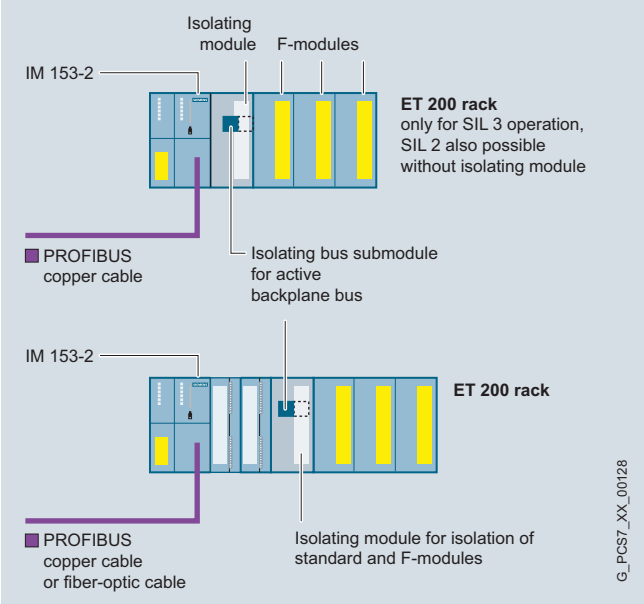

Isolating module

The following components are available as accessories for the F modules:

- Isolating module
  - Isolation of F and standard modules in an ET 200M remote I/O station
  - Signal isolation when using a copper bus connection (only F modules in an ET 200M remote I/O station with IM 153-2)
- Isolating bus submodule for isolating module, when using an active backplane bus

The isolating module is required in SIL 3 applications with F signal modules SM 326; AI 6 x 13 bit, SM 326; DI 8 x NAMUR and SM 326; DO 10 x DC 24 V/2 A (width 80 mm) in the following cases:

- Design of PROFIBUS DP with copper cables
- Design of PROFIBUS DP with fiber-optic cables and joint operation of the mentioned F signal modules with standard modules in an ET 200M station

Note:

The isolating module for F modules and the isolating bus submodule can only be used together. The 40-mm wide gap cannot be used for other modules.

Ordering data

	Article No.
SM 326 F-DI safety-related digital input module for floating contacts	
24 inputs, 24 V DC 80 mm wide Isolated in groups of 12 **Redundancy optional** (channel-granular redundancy) • 4 short-circuit-proof sensor power supplies, each for 6 channels, isolated in groups of 3 • External sensor power supply possible • SIL 2: 1oo1 evaluation, 24 channels • SIL 3: 1oo2 evaluation on the module, 12 channels (adjustable discrepancy time) • SIL 3 achievable without isolating module • Short-circuit monitoring to L+ • Discrepancy monitoring • Supports 20 ms time stamping (SOE) • Module internal diagnostics • PROFIsafe telegram • Front connector required: 40-pin	**6ES7326-1BK02-0AB0**
8 inputs, NAMUR [EEx ib][1)] 80 mm wide Isolated by channel **Redundancy optional** (channel-granular redundancy) • 8 short-circuit-resistant sensor power supplies, each for 1 channel, mutually isolated • SIL 2: 1oo1 evaluation, 8 channels • SIL 3: 1oo2 evaluation on the module, 4 channels (adjustable discrepancy time) • Wire break and short-circuit monitoring (for contacts with external resistor circuit) • Discrepancy monitoring • Module internal diagnostics • PROFIsafe telegram • Front connector required: 40-pin	**6ES7326-1RF01-0AB0**

	Article No.
Safety-related digital output module SM 326 F-DO Suitable for solenoid valves, DC contactors and indicator lights	
10 outputs, 24 V DC, 2 A 40 mm wide Isolated in groups of 5 (outputs with internal diode) **Redundancy optional** (channel-granular redundancy) • 10 outputs, isolated in groups of 5 • SIL 3 achievable without isolating module • P/P-switching (for non-floating loads; ground and earth connected together) • Wire break and short-circuit monitoring • Configurable diagnostics • "Keep last valid value" parameter • Channel-selective passivation • PROFIsafe telegram • Front connector required: 40-pin	**6ES7326-2BF10-0AB0**
8 outputs, 24 V DC, 2 A 80 mm wide Electrically isolated in groups of 4 • SIL 2, SIL 3 configurable (8 channels) • SIL 3 achievable without isolating module • P/M-switching (for floating loads; ground and earth separate) • Wire break and short-circuit monitoring • Module internal diagnostics • PROFIsafe telegram • Front connector required: 40-pin	**6ES7326-2BF41-0AB0**
SM 336 FA-I HART safety-related analog input module	
6 inputs, 0 ... 20 mA or 4 ... 20 mA 40 mm wide Electrically isolated in groups of 3 **Redundancy optional** (channel-granular redundancy) • Resolution: 15 bits + sign • 2-wire or 4-wire connection • 6 short-circuit-proof sensor supplies for 1 channel each • External sensor power supply possible • SIL 3: 1oo1 evaluation (6 channels) and 1oo2 evaluation (3 channels) on the module • SIL 3 achievable without isolating module • Discrepancy monitoring with 1oo2 evaluation (adjustable discrepancy time) • Wire break monitoring • Module and channel diagnostics • HART communication in measuring range 4 ... 20 mA (can be switched on/off online) • HART status display • PROFIsafe telegram • Front connector required: 20-pin	**6ES7336-4GE00-0AB0**
Options	
Isolating module For F modules, 40 mm wide • For isolation of F and standard modules in an ET 200M rack • For signal isolation when using a copper bus connection (only F modules in a rack with IM 153-2)	**6ES7195-7KF00-0XA0**
Isolating bus module 80 mm wide, for isolating module, when using an active backplane bus	**6ES7195-7HG00-0XA0**

1) The SM 326 F-DI NAMUR module does not support PROFINET

Overview

The FM 355 is an intelligent 4-channel controller module for universal control tasks. It can be used to control temperature, pressure and flow.

The following versions of the FM 355 are available:

- FM 355 C
  Continuous-action controller with 4 analog outputs for controlling analog actuators
- FM 355 S
  Step or pulse controller with 8 digital outputs for controlling motor-driven (integrating) actuators or binary controlled actuators (e.g. electrical heating strips and cartridges)
- FM 355-2 C/S
  Specially optimized for temperature controls with user-friendly online self-optimization integrated

Function

The FM 355 and FM 355-2 modules have four separate control channels. The controllers have the following features:

- Predefined controller structures for
  - Fixed setpoint control
  - Cascade controller
  - Ratio control
  - 3-component control
- Different operating modes
  - Automatic mode
  - Manual mode
  - Safety mode
  - Follow-up mode
  - Backup mode
- Sampling time (depending on the resolution of the analog inputs and the compensation input):
  - At 12 bits: 20 ms to 100 ms (FM 355-2 only)
  - At 14 bits: 100 ms to 500 ms (depending on the number of released analog inputs)
- 2 control algorithms:
  - Self-optimizing temperature control algorithm
  - PID algorithm
- Integrated online self-optimization without configuration (FM 355-2 only)
  - Faster adjustment to the operating point
- Convenient controller optimization
- Backup mode
  The controller can continue to control independently in the event of CPU failure or CPU stop. To this end, configurable safety setpoints or safety manipulated variables are set.
- Feed forward control
  The analog inputs can optionally be used for feed forward control in addition to actual value recording.

Integration

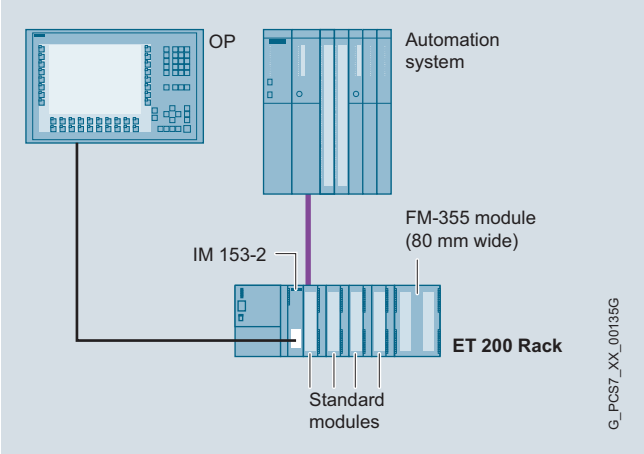

Use in SIMATIC PCS 7

The FM 355/FM 355-2 modules can be used to implement control tasks outside the SIMATIC PCS 7 automation system. The modules have not only controller structures but also analog and digital channels, thus eliminating the need for additional modules to detect the setpoint/actual value or to control the actuator.

On the one hand this reduces the work load for the CPU, on the other hand it enables backup mode with which the control system continues to work even if the CPU fails. In this case the FM 355 module can be operated further with an OP operator panel (does not apply to FM 355-2).

The operator panel is connected to the PROFIBUS DP fieldbus for this purpose. The CPU of the automation system can surrender input privilege to the operator panel in normal operation as well. The parameters that can be accessed with the operator panel are the setpoint and manipulated variable. If the FM 355 module is operated from the operator panel, the automation system reads back the values accessible from the operator panel after the input privilege is withdrawn or recovered again. Bumpless continuation of the operations is thus assured.

IM 153-2 High Feature interface modules are needed for the PROFIBUS DP connection when the FM 355/FM 355-2 controller modules are used in ET 200M.

SIMATIC PCS 7 blocks

CFC blocks with OS faceplates for all FM 355 modules are included in the scope of supply of the standard SIMATIC PCS 7 library (part of engineering software). These blocks are integrated into the SIMATIC PCS 7 driver concept. This guarantees homogenous system integration (including automatic diagnostics messages).

Parameterization in HW-Config

A configuration package containing all parameterization masks required for configuring, parameterizing and commissioning is included in the scope of supply of the FM 355 controller modules.

Ordering data

	Article No.
FM 355 C controller module With 4 analog outputs for 4 continuous-action controllers Front connector required: 2 x 20-pin Incl. multi-lingual configuration package, manual and Getting Started (English, German, French, Italian) on CD-ROM	**6ES7355-0VH10-0AE0**
FM 355 S controller module With 8 digital outputs for 4 step or pulse controllers Front connector required: 2 x 20-pin Incl. multi-lingual configuration package, manual and Getting Started (English, German, French, Italian) on CD-ROM	**6ES7355-1VH10-0AE0**
FM 355-2 C temperature controller module with 4 analog outputs for 4 continuous-action controllers Front connector required: 2 x 20-pin Incl. multi-lingual configuration package, manual and Getting Started (English, German, French, Italian) on CD-ROM	**6ES7355-2CH00-0AE0**
FM 355-2 S temperature controller module With 8 digital outputs for 4 step or pulse controllers Front connector required: 2 x 20-pin Incl. multi-lingual configuration package, manual and Getting Started (English, German, French, Italian) on CD-ROM	**6ES7355-2SH00-0AE0**

Note:

In the case of the FM 355 C and FM 355 S controller modules, the channels are not electrically isolated from one another

Overview

The FM 350-1 counter module is a single-channel intelligent counter module for simple counting tasks, suitable for the direct connection of incremental encoders. It provides a comparison function with 2 preselectable reference values, as well as integrated digital outputs for outputting a reaction upon reaching the reference value.

The FM 350-2 counter module is an eight-channel intelligent counter module for universal counting and measuring tasks, as well as for simple positioning jobs (max. 4 axes).

Ordering data

	Article No.
FM 350-1 counter module Counting functions up to 500 kHz 1 channel for the connection of 5 V and 24 V incremental encoders Front connector required: 1 x 20-pin incl. configuration package on CD	**6ES7350-1AH03-0AE0**
FM 350-2 counter module 8 channels with maximum 20 kHz counting frequency; for 24 V encoders, for the following tasks: counting, frequency measurement, speed measurement, period measurement, dosing Front connector required: 1 x 40-pin incl. configuration package on CD	**6ES7350-2AH01-0AE0**

Overview

The ET 200iSP is a modular, intrinsically-safe I/O system with IP30 degree of protection which can be operated in gas and dust atmospheres at ambient temperatures from -20 to +70 °C.

In accordance with ATEX directive 94/9/EC, the ET 200iSP remote I/Os stations can be installed directly in the Ex zones 1, 2, 21 or 22 as well as in non-hazardous areas. The intrinsically-safe sensors, actuators and HART field devices can also be located in zone 0 or 20 if necessary.

The modular design of the ET 200iSP makes it possible to optimally adapt the remote I/O stations to the respective automation task through individual configuration and flexible expansion. To increase plant availability, the pressure-encapsulated power supply and the intrinsically-safe PROFIBUS DP connection (RS 485-iS) of the stations can also be of redundant design.

The modern architecture with independent wiring and automatic slot coding supports simple and reliable hot swapping of individual modules without a fire certificate.

In addition to analog and digital I/O modules for the automation of the technological functions of the process (Basic Process Control), the range of electronics modules also includes safety-related F-I/O modules for implementing safety applications. The various types of electronics module can be arranged mixed within a station.

Design

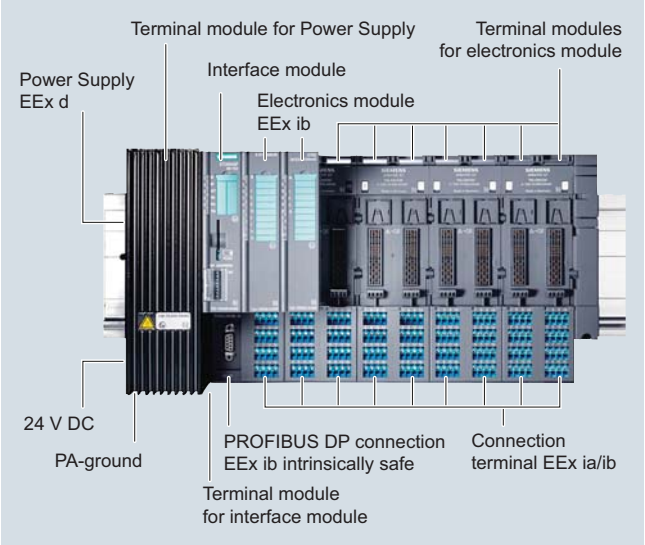

Main components of the ET 200iSP distributed I/O system:

- Terminal modules
  mounted on an S7-300 rail; for connecting power supply, interface, electronics, watchdog and reserve modules and for prewiring
  - with blue screw-type or spring-loaded terminals for hazardous environments
  - with black screw-type terminals for non-hazardous environments
- Power supply unit
  1 or 2 (redundant) power supply modules PS with pressurized enclosure for feeding 24 V DC or 120/230 V AC
- Interface module
  1 or 2 (redundant) IM 152 interface modules for connecting the station to the PROFIBUS DP
- Electronics modules (2/4/8 channels): Up to 32 in any combination
  - Digital electronics modules (DI, DO)
  - Analog electronics modules (AI, AO)
  - Safety-related electronics modules (F-DI, F-DO and F-AI)
  - Watchdog module
- Accessories
  - Reserve module for reserving a slot for any electronics module
  - Terminating module (included in scope of delivery of terminal modules for the PROFIBUS interface)
  - Labeling sheets with printable labeling strips
  - Inscription labels for slot numbering

Assembly

Assembly is quick and easy:

- Latching of terminal modules onto the S7-300 rail
- Prewiring of process signal cables on the terminal modules using spring-loaded or screw-type connections
- Plugging-in of power supply, interface and electronics modules without the need for additional tools

Design (continued)

Expansion limits

The station width is 107 cm in the maximum configuration with 32 electronic modules.

The maximum number of electronics modules which can be used per station may be limited depending on the current consumption of the modules required to solve the automation task. However, up to 16 electronics modules can be used without limitation.

Stainless steel wall enclosure

If the ET 200iSP is used in a hazardous area, it must be installed in an appropriate Ex housing which at least corresponds to the IP54 degree of protection. Appropriate versions of an IP65 housing are offered in the Section "Stainless steel wall housings".

Outstanding design features

- Installation and testing of the wiring is possible in advance without the electronics module (independent wiring).
- Isolation of the mechanical and electronic systems, in conjunction with the independent process wiring, permits fast and easy replacement of the electronics modules
- Mechanical coding which is carried out when an electronics module is plugged onto a terminal module for the first time prevents the connection of incorrect replacement modules
- Hot swapping of the power supply modules and electronics modules is possible without a fire certificate.

Integration

Distributed ET 200iSP stations are connected to the SIMATIC PCS 7 automation systems (controllers) via the PROFIBUS DP, which can be routed intrinsically-safe into Ex zone 1 using an isolating transformer (RS485-iS coupler) as barrier. Data transfer rates of up to 1.5 Mbit/s are possible.

The ET 200iSP is integrated into SIMATIC PCS 7 using standard driver blocks. You can therefore configure the ET 200iSP in the SIMATIC Manager of the engineering system extremely simply using HW-Config. The system function CiR (Configuration in Run) is also supported, and permits the following changes to be made to the configuration during runtime:

- Adding ET 200iSP stations
- Adding modules to the ET 200iSP station
- Re-configuration of modules
- Parameterization of connected HART field devices with SIMATIC PDM

Vendor-specific information and maintenance data are saved powerfail-proof on the electronics modules.

The existing standard diagnostics drivers preprocess the diagnostics messages generated by internal or external faults (e.g. wire breakage or short-circuit) as well as status messages of the connected HART field devices for the host operator system and the Maintenance Station of the PCS 7 asset management.

The ET 200iSP and the HART field devices can also be configured using SIMATIC PDM (process device manager). With SIMATIC PDM you can directly access the HART field devices on the ET 200iSP by routing via PROFIBUS DP.

Technical specifications

ET 200iSP – general		
Degree of protection	IP30	
Ambient temperature • Horizontal mounting position • Other mounting positions	 -20 … +70 °C -20 … +50 °C	
Loading of Media	According to ISA-S71.04 severity level G1; G2; G3 (except for NH3, only level G2 in this case)	
EMC	Electromagnetic compatibility according to NE21	
Vibration resistance	0.5 g continuously, 1 g periodically	
Approvals, standards		
• ATEX	II 2 G (1) GD I M2	Ex de [ia/ib] IIC T4 Ex de [ia/ib] I
• IECEx	Zone 1	Ex de [ia/ib] IIC T4
• INMETRO	Zone 1	BR-Ex de [ia/ib] IIC T4
• cFMus	Class I, II, III	NI Division 2, Groups A, B, C, D, E, F, G T4 AIS Division 1, Groups A, B, C, D, E, F, G
• cULus	Class I	Zone 1, AEx de [ia/ib] IIC T4
	Class I, II, III	Division 2, Groups A, B, C, D, E, F, G T4 providing int. safe circuits for Division 1, Groups A, B, C, D, E, F, G
	Class I	Zone 1, AEx de [ia/ib] IIC T4
• NEPSI	Ex de ib[ia] IIC T4 Ex de [ia/ib] IIC T4	
• PROFIBUS	EN 50170, Volume 2	
• IEC	IEC 61131, Part 2	
• CE	According to 94/9/EC (previously ATEX 100a), 2004/108/EC and 2006/95/EC	
• KCC	Korea Certification	
• Marine approval	Classification companies • ABS (American Bureau of Shipping) • BV (Bureau Veritas) • DNV (Det Norske Veritas) • GL (Germanischer Lloyd) • LRS (Lloyds Register of Shipping) • Class NK (Nippon Kaiji Kyokai)	

Detailed technical specifications, especially for individual components such as power supply modules, interface modules or electronic modules, see Industry Mall/CA 01 under "Automation technology - Automation systems - SIMATIC industrial automation systems - IO systems - SIMATIC ET 200 systems for control cabinets" – SIMATIC ET 200iSP".

Overview

An ET 200iSP power supply unit consists of a TM-PS terminal module (A or B) and a PS power supply module which is plugged onto this. Terminal modules and power supply modules can be ordered separately.

The power supply modules are suitable for both individual operation (standard) and redundant operation. Depending on the operating mode, they must be combined with the terminal modules as follows:

- Standard: 1 x PS on TM-PS-A
- Redundancy: 1 x PS on TM-PS-A (left) plus 1 x PS on TM-PS-B (right)

Power supply modules are available for supplies of 24 V DC and 120/230 V AC. These can only be used together with the matching terminal module versions.

The operating state of the power supply modules is indicated by two LEDs on the IM 152 interface module (one for each module).

Application

Functions of the power supply modules

- Supply of ET 200iSP with safely isolated operating voltages for
  - Power bus
  - Backplane bus
  - Interface module (IM 152-1)
- Safety-related limiting of output voltages

Design

Depending on the operating mode (standard or redundant), one or two power supply modules are plugged onto the corresponding terminal modules. In standard mode, a PS power supply module is combined with a TM-PS-A terminal module. In redundant mode, a second power supply unit is provided on the right of the first one. This consists of a PS power supply module and a TM-PS-B terminal module.

The power supply modules can also be used in hazardous areas. The explosion protection is guaranteed by an explosion-proof metal enclosure (explosion protection EEx d).

The power source (24 V DC or 120/230 V AC) may be used in the safe area. It is connected to the terminal module of the power supply unit via EX e terminals. The power source must not be connected or disconnected in the hazardous area, but only in a safe environment.

The power supply module is moved into its working position by means of a slide system, and manually fixed there by means of a mechanical lock. Replacement through disconnection of the existing power supply module and insertion of a new module is also permissible in the hazardous area. To replace the module, the mechanical lock must first be released to remove the module from its working position using the slide.

Technical specifications

Order number	**6ES7138-7EA01-0AA0** ET200ISP, POWER SUPPLY MODULE	**6ES7138-7EC00-0AA0** ET200ISP, POWER SUPPLY MOD. AC120/230V
Supply voltage		
Rated value (DC)	24 V	
Rated value (AC)		230 V; 120/230V AC
Reverse polarity protection	Yes	
Line frequency		
• permissible range, lower limit		47 Hz
• permissible range, upper limit		63 Hz
Input current		
from supply voltage L+, max.	4 A	
from supply voltage L1, max.		1.04 A; at rated voltage 230 VAC:0.45A at rated voltage 120 VAC:0.75A
Power loss		
Power loss, typ.	20 W	5 W; 5 W + 1.2 x total power loss of the electronics modules
Power loss, max.		21.3 W
Interrupts/diagnostics/status information		
Status indicator	Yes	Yes
Alarms	No	No
Diagnostic messages		
• Diagnostic information readable	Yes; via IM 152	Yes; via IM 152
Diagnostics indication LED		
• Group error SF (red)	No	No

Technical specifications (continued)

Order number	**6ES7138-7EA01-0AA0** ET200ISP, POWER SUPPLY MODULE	**6ES7138-7EC00-0AA0** ET200ISP, POWER SUPPLY MOD. AC120/230V
Ex(i) characteristics		
Maximum values of input circuits (per channel)		
• Um (fault voltage), max.	250 V; DC	264 V; AC/DC
Potential separation		
primary/secondary	Yes	Yes
between supply voltage and electronics	Yes	No
Standards, approvals, certificates		
CE mark	Yes	Yes
Use in hazardous areas		
• Type of protection acc. to EN 50020 (CENELEC)	Ex de [ib]IIC T4	Ex de [ib]IIC T4
• Type of protection acc. to KEMA	04 ATEX 2263	09 ATEX 0156
Dimensions		
Width	60 mm	60 mm
Height	190 mm	190 mm
Depth	136.5 mm	136.5 mm
Weights		
Weight, approx.	2 700 g	2 700 g

Order number	**6ES7193-7DA10-0AA0** ET200ISP, TERMINAL-MOD. TM-PS-A F. PS	**6ES7193-7DB10-0AA0** ET200ISP, TERMINAL-MOD. TM-PS-A F. PS	**6ES7193-7DA20-0AA0** ET200ISP, TERM.-MOD. TM-PS-A UC	**6ES7193-7DB20-0AA0** ET200ISP, TERM.-MOD. TM-PS-B UC
Standards, approvals, certificates				
CE mark			Yes	Yes
Use in hazardous areas				
• Type of protection acc. to EN 50020 (CENELEC)	see ET200iSP system	see ET200iSP system	see ET200iSP system	see ET200iSP system
• Test number KEMA	04 ATEX 2242	04 ATEX 2242	04 ATEX 2242	04 ATEX 2242
Dimensions				
Width	60 mm	60 mm	60 mm	60 mm
Height	190 mm	190 mm	190 mm	190 mm
Depth	52 mm	52 mm	52 mm	52 mm
Weights				
Weight, approx.			230 g	230 g

Ordering data

	Article No.		**Article No.**
Power supply units for 24 V DC supply		**Power supply units for 120/230 V AC supply**	
PS 24 V DC power supply module for ET 200iSP	**6ES7138-7EA01-0AA0**	**PS 120/230 V AC power supply module for ET 200iSP**	**6ES7138-7EC00-0AA0**
TM-PS-A terminal module for standard operation	**6ES7193-7DA10-0AA0**	**TM-PS-A UC terminal module** For standard operation	**6ES7193-7DA20-0AA0**
TM-PS-B terminal module Additional terminal module for redundant operation	**6ES7193-7DB10-0AA0**	**TM-PS-B UC terminal module** Additional terminal module for redundant operation	**6ES7193-7DB20-0AA0**

Overview

The IM 152 interface module connects the ET 200iSP to the PROFIBUS DP with intrinsically-safe RS 485-iS transmission technology with transmission rates up to 1.5 Mbit/s. A redundant connection is also possible. In this case the ET 200iSP is connected via two interface modules to two redundant PROFIBUS DP segments of a high availability automation system.

The IM 152 is plugged onto a special terminal module (to be ordered separately). The following terminal modules are available:

- TM-IM/IM terminal module for two interface modules (for redundant PROFIBUS DP connection)
- TM-IM/EM60 terminal module for one interface module and one watchdog, reserve or electronics module (except 2 DO relay)
  - with blue screw-type or spring-loaded terminals for hazardous environments
  - with black screw-type terminals for non-hazardous environments

Tasks of the IM 152 interface module

- Connection of ET 200iSP to the intrinsically-safe PROFIBUS DP
- Autonomous communication with the host automation system
- Preparation of data for the fitted electronic modules
- Saving of parameters of the electronics modules
- Time stamping of digital process signals with an accuracy of 20 ms

The maximum address space of the interface module is 244 bytes for inputs, and 244 bytes for outputs.

Design

The terminal module of the IM 152 (TM-IM/EM or TM-IM/IM) is connected directly next to the power supply unit on the DIN rail. The PROFIBUS DP connection of the IM 152 is made using the standard Sub-D socket on the terminal module. The matching connection element we provide is a special terminating plug with selectable terminating resistance. The terminating resistance must be activated on the last ET 200iSP station of each PROFIBUS DP segment.

Hot swapping of the IM 152 and the PROFIBUS connector is permissible under hazardous conditions.

A terminating module is provided together with the IM 152, and must be fitted at the right end of each ET 200iSP station following the last electronics module.

The IM 152 has a slot for micro memory cards (MMC). The firmware can therefore be updated either via the PROFIBUS DP or using MMCs.

The PROFIBUS addresses can be set using DIL switches at the front which are protected by a cover.

LEDs on the front of the IM 152 signal the supply voltage, group faults, bus faults, the active IM with redundant operation, and the operating state of the fitted power supply modules.

Technical specifications

Order number	**6ES7152-1AA00-0AB0** ET200ISP, IM152-1 INTERFACE MODULE
General information	
Vendor identification (VendorID)	8110H
Input current	
from supply voltage L+, max.	30 mA
Power loss	
Power loss, typ.	0.5 W
Time stamping	
Description	for each digital input, digital input module, total ET 200iS
Accuracy	20 ms
Number of stampable digital inputs, max.	64; for accuracy class 20 ms
Time format	RFC 1119 Internet (ISP)
Time resolution	1 ms
Time interval for transmitting the message buffer if a message is present	1 000 ms
Time stamp on signal change	rising / falling edge as signal entering or exiting

Order number	**6ES7152-1AA00-0AB0** ET200ISP, IM152-1 INTERFACE MODULE
Interfaces	
Interface physics, RS 485	Yes; intrinsically safe
PROFIBUS DP	
• Transmission rate, max.	1.5 Mbit/s; 9,6 / 19,2 / 45,45 / 93,75 / 187,5 / 500 kbit/s
• SYNC capability	Yes
• FREEZE capability	Yes
• Direct data exchange (slave-to-slave communication)	Yes; Slave to slave as publisher
Protocols	
PROFIBUS DP	Yes
Protocols (Ethernet)	
• TCP/IP	No
Isochronous mode	
Isochronous operation (application synchronized up to terminal)	No

Technical specifications (continued)

Order number	6ES7152-1AA00-0AB0 ET200ISP, IM152-1 INTERFACE MODULE
Interrupts/diagnostics/status information	
Alarms	Yes
Diagnostic functions	Yes
Alarms	
• acyclic function, interrupts	Yes
• acyclic function, parameters	Yes
Diagnostics indication LED	
• Bus fault BF (red)	Yes
• Group error SF (red)	Yes
• Monitoring 24 V voltage supply ON (green)	Yes
Potential separation	
between supply voltage and electronics	Yes

Order number	6ES7152-1AA00-0AB0 ET200ISP, IM152-1 INTERFACE MODULE
Standards, approvals, certificates	
CE mark	Yes
Use in hazardous areas	
• Type of protection acc. to EN 50020 (CENELEC)	II2 G Ex ib IIC T4 and I M2 Ex ib I
• Type of protection acc. to KEMA	04 ATEX 1243
Dimensions	
Width	30 mm
Height	129 mm
Depth	136.5 mm
Weights	
Weight, approx.	245 g

Order number	6ES7193-7AA00-0AA0 ET200ISP, TERM.-MOD. TM-IM/EM60S, SCREW	6ES7193-7AA10-0AA0 ET200ISP, TERM.-MOD. TM-IM/EM60C ,SPRING	6ES7193-7AB00-0AA0 ET200ISP, TERM.-MOD. TM-IM/IM F. TWO IM
Standards, approvals, certificates			
CE mark	Yes	Yes	Yes
Use in hazardous areas			
• Type of protection acc. to EN 50020 (CENELEC)	see ET200iSP system	see ET200iSP system	see ET200iSP system
• Test number KEMA	04 ATEX 2242	04 ATEX 2242	04 ATEX 2242
Dimensions			
Width	60 mm	60 mm	60 mm
Height	190 mm	190 mm	190 mm
Depth	52 mm	52 mm	52 mm
Weights			
Weight, approx.	235 g	235 g	195 g

Ordering data

	Article No.
ET 200iSP interface module IM 152-1	**6ES7152-1AA00-0AB0**
ET 200iSP terminal module TM-IM/EM60 for an IM 152 and a watchdog, reserve or electronic module (except 2 DO relay), including terminating module	
• for hazardous environments	
- TM-IM/EM60S (blue screw-type terminals)	**6ES7193-7AA00-0AA0**
- TM-IM/EM60C (blue spring-loaded terminals)	**6ES7193-7AA10-0AA0**
• for non-hazardous environments	
- TM-IM/EM60S (black screw-type terminals)	**6ES7193-7AA20-0AA0**
ET 200iSP terminal module TM-IM/IM for two IM 152 modules (redundant operation), including terminating module	**6ES7193-7AB00-0AA0**

	Article No.
Accessories	
PROFIBUS connector with selectable terminating resistor for connection of IM 152 to PROFIBUS DP with RS 485-iS transmission technology	**6ES7972-0DA60-0XA0**
RS 485-IS coupler Isolating transformer for connection of PROFIBUS DP segments with RS 485 and RS 485-iS transmission technologies	**6ES7972-0AC80-0XA0**
S7-300 rails	
• 585 mm long, suitable for assembly of ET 200iSP in a 650 mm wide wall box	**6ES7390-1AF85-0AA0**
• 885 mm long, suitable for assembly of ET 200iSP in a 950 mm wide wall box	**6ES7390-1AJ85-0AA0**

Additional accessories such as labeling strips or plates, see Industry Mall under "Automation technology - Automation systems - SIMATIC industrial automation systems - IO systems - SIMATIC ET 200 systems for control cabinets" – SIMATIC ET 200iSP".

Overview

Digital input modules

- 8-channel digital input module DI NAMUR EEx i, for evaluation of NAMUR sensors, connected and non-connected contacts, as well as for use as counter or frequency meter
  Parameterizable connections:
  - NAMUR sensor on/off
  - NAMUR changeover contact
  - Single contact connected (mechanical NO contact)
  - Changeover contact connected (mechanical changeover contact)
  - Single contact non-connected (mechanical NO contact with single contact)
  - Changeover contact non-connected (mechanical changeover contact)
  - Counting function: optional use of 2 channels for recording counter pulses or for frequency measurement
  - Short-circuit and wire break monitoring

Digital output modules

- 4-channel digital output modules DO EEx i, 23.1 V DC/20 mA, 17.4 V DC/27 mA , 17.4 V DC/40 mA or 25.5 V DC/22 mA, with external actuator switch-off via High or Low signal (H/L switch-off)
  - Load-free switching of outputs via external intrinsically-safe signal
  - Power boosting through parallel connection of two outputs for one actuator with 4 DO 17.4 V DC/27 mA or 4 DO 17.4 V DC/40 mA
  - Short-circuit and wire break monitoring
- 2-channel digital output module DO Relay EEx e, e.g. for switching solenoid valves, DC contactors or signaling lamps
  - Can be plugged onto TM-RM/RM terminal module
  - Output current up to 2 A with 60 V AC/DC for each of the two relay outputs
  - Installation up to Ex zone 1
  - Intrinsically-safe and non-intrinsically-safe signals can be mixed in a station

Extra functions

Actuator switch-off function of the 4-DO EEx i modules

The 4-DO EEx i modules are equipped with a switch-off function. This permits implementation of an external switch-off independent of the automation system (controller).

As soon as the intrinsically-safe switch-off signal (High or Low) is present at the actuator switch-off input of the electronics module, its outputs are deactivated.

You can also combine several DO modules into a switch-off group. The intrinsically-safe power supply for the switch-off device is either via the watchdog module or a separate intrinsically-safe source.

Design

- The digital electronics modules are installed on terminal modules which must be ordered separately.
  - TM-IM/EM60 terminal modules for one interface module and one watchdog, reserve or electronics module (for versions, see section Interface module)
  - TM-EM/EM60 terminal modules with two slots for watchdog module, reserve module or electronics module (except 2 DO relay), with blue screw-type or spring-loaded terminals for hazardous environments or with black screw-type terminals for non-hazardous environments
  - TM-RM/RM 60 terminal modules with two slots for relay or reserve modules
- The digital electronics module 2 DO Relays must be plugged onto the terminal module TM-RM/RM 60S (screw-type connection system). All other digital electronics modules are plugged as planned onto terminal modules using screw-type systems (TM-EM/EM60S) or spring-loaded systems (TM-EM/EM60C).
- Using a spare module plugged onto a terminal module TM-EM/EM60S, TM-EM/EM60C or TM-RM/RM 60S, you can reserve a slot for a digital electronics module or close a gap resulting from the design. The spare module can be simply replaced by the envisaged electronics module at a later point in time.
- The mechanical coding of the terminal module which is carried out when an electronics module is plugged on for the first time prevents the connection of incorrect replacement modules.
- Hot swapping of individual modules is possible under hazardous conditions.
- The process signals are connected to the terminals of the terminal modules assigned according to the plan, using either conventional screw-type or spring-loaded systems (conductor cross-sections 0.14 mm^2 to max. 2.5 mm^2) depending on the type of module.

Technical specifications

Order number	**6ES7131-7RF00-0AB0** ET200ISP, EL-MOD., 8DI, NAMUR
Digital inputs	
Number of digital inputs	8
Number of NAMUR inputs	8
Input voltage	
• Type of input voltage	DC
Input delay (for rated value of input voltage)	
for standard inputs	
- at "0" to "1", min.	2.8 ms
- at "0" to "1", max.	3.5 ms
- at "1" to "0", min.	2.8 ms
- at "1" to "0", max.	3.5 ms
Cable length	
• shielded, max.	500 m
Encoder	
Number of connectable encoders, max.	8
Connectable encoders	
• NAMUR encoder	Yes
NAMUR encoder	
• Input current for signal "0", max.	1.2 mA
• Input current for signal "1", min.	2.1 mA
Interrupts/diagnostics/status information	
Diagnostic functions	Yes
Alarms	
• Diagnostic alarm	Yes; Parameterizable
• Hardware interrupt	No
Diagnostic messages	
• Diagnostic information readable	Yes
• Short-circuit	Yes; R load < 150 ohms with NAMUR sensor/sensor and NAMUR changeover contact/sensor to DIN 19234
Diagnostics indication LED	
• Group error SF (red)	Yes
• Status indicator digital input (green)	Yes

Order number	**6ES7131-7RF00-0AB0** ET200ISP, EL-MOD., 8DI, NAMUR
Integrated Functions	
Frequency measurement	Yes; (Gate time) 50 ms; 200 ms; 1 s
Number of frequency meters	2
Counter	
Number of counter inputs	2; normal and periodic count function
Input frequency, max.	5 kHz; with a cable length of 20 m: 5 kHz; with a cable length of 100 m: 1 kHz; with a cable length of 200 m: 500 Hz
Potential separation	
Potential separation digital inputs	
• between the channels	No
• between the channels and backplane bus	Yes
Permissible potential difference	
between different circuits	60 V DC/30 V AC
Standards, approvals, certificates	
CE mark	Yes
Use in hazardous areas	
• Type of protection acc. to EN 50020 (CENELEC)	II2 G (1) GD Ex ib[ia] IIC T4 and I M2 Ex ib[ia] I
• Type of protection acc. to KEMA	04 ATEX 1248
Dimensions	
Width	30 mm
Height	129 mm
Depth	136.5 mm
Weights	
Weight, approx.	255 g

Order number	**6ES7132-7RD01-0AB0** ET200ISP, EL-MOD., 4DO, DC 23,1V, 20MA	**6ES7132-7RD11-0AB0** ET200ISP, EL-MOD., 4DO, DC 17,4V, 27MA	**6ES7132-7RD22-0AB0** ET200ISP, EL-MOD., 4DO, DC 17.4V, 40MA
Input current			
from load voltage L+ (without load), max.	340 mA; with actuator supply	300 mA	400 mA
from backplane bus 3.3 V DC, max.	10 mA	10 mA	
Power loss			
Power loss, typ.	2.5 W	2.1 W	2.8 W
Address area			
Address space per module			
• without packing	2 byte	2 byte	2 byte
Digital outputs			
Number of digital outputs	4; additionally 1 intrinsically-safe input for H shutdown	4; additionally 1 intrinsically-safe input for H shutdown	4; additionally 1 intrinsically-safe input for H shutdown
Short-circuit protection	Yes	Yes	Yes
No-load voltage Uao (DC)	23.1 V	17.4 V	17.4 V
Internal resistor Ri	275 ?	150 ?	167 ?
Trend key points E			
• Voltage Ue (DC)	17.1 V	13.2 V	10.7 V
• Current Ie	20 mA	27 mA	40 mA; 80 mA when outputs connected in parallel

Technical specifications (continued)

Order number	6ES7132-7RD01-0AB0 ET200ISP, EL-MOD., 4DO, DC 23,1V, 20MA	6ES7132-7RD11-0AB0 ET200ISP, EL-MOD., 4DO, DC 17,4V, 27MA	6ES7132-7RD22-0AB0 ET200ISP, EL-MOD., 4DO, DC 17.4V, 40MA
Output current			
• for signal "1" rated value	0.02 A	0.027 A	0.04 A
Output delay with resistive load			
• "0" to "1", max.	2 ms	2 ms	2 ms
• "1" to "0", max.	1.5 ms	1.5 ms	1.5 ms
Parallel switching of two outputs			
• for uprating	No; for Ex reasons not possible; nor for predecessor	Yes	Yes
Switching frequency			
• with resistive load, max.	100 Hz	100 Hz	100 Hz
• with inductive load, max.	2 Hz	2 Hz	2 Hz
Cable length			
• shielded, max.	500 m	500 m	500 m
• unshielded, max.	500 m	500 m	500 m
Interrupts/diagnostics/status information			
Status indicator	Yes	Yes	Yes
Alarms		No	
Diagnostic functions	Yes	Yes	
Alarms			
• Diagnostic alarm	Yes; Parameterizable	Yes; Parameterizable	Yes; Parameterizable
Diagnostic messages			
• Diagnostic information readable	Yes	Yes	Yes
• Wire-break	Yes; R > 10 kohms, I < 100 µA	Yes	Yes; R > 10 kohms, I < 100 µA
• Short-circuit	Yes; R< 800 ohms (one output), R< 40 ohms (outputs connected in parallel)	Yes	Yes; R< 80 Ohm (one output), R< 40 Ohm (outputs connected in parallel)
Diagnostics indication LED			
• Group error SF (red)	Yes	Yes	Yes
• Status indicator digital output (green)	Yes	Yes	Yes; Per channel
Parameter			
Remark		14 byte	
Diagnostics wire break	Yes	Yes	Yes
Diagnostics short-circuit	Yes	Yes	Yes
Behavior on CPU/Master STOP	Substitute a value/keep last value	Substitute a value/keep last value	Substitute a value/keep last value
Ex(i) characteristics			
Maximum values of output circuits (per channel)			
• Co (permissible external capacity), max.			241 nF; For IIC, 1507 nF for IIB
• Io (short-circuit current), max.			118 mA
• Lo (permissible external inductivity), max.			1.7 mH; For IIC, 10.4 mH for IIB
• Po (power of load), max.			572 mW
• Uo (output no-load voltage), max.			19.4 V
• Ta (permissible ambient temperature), max.	70 °C	70 °C	
Potential separation			
Potential separation digital outputs			
• between the channels	No	No	No
• between the channels and backplane bus	Yes	Yes	Yes
• Between the channels and load voltage L+	Yes	Yes	Yes
Permissible potential difference			
between different circuits			60 V DC/30 V AC
Standards, approvals, certificates			
CE mark			Yes

Technical specifications (continued)

Order number	6ES7132-7RD01-0AB0 ET200ISP, EL-MOD., 4DO, DC 23,1V, 20MA	6ES7132-7RD11-0AB0 ET200ISP, EL-MOD., 4DO, DC 17,4V, 27MA	6ES7132-7RD22-0AB0 ET200ISP, EL-MOD., 4DO, DC 17.4V, 40MA
Highest safety class achievable in safety mode			
• SIL acc. to IEC 61508	No		No
Use in hazardous areas			
• Type of protection acc. to EN 50020 (CENELEC)	II2 G (1) GD Ex ib[ia] IIC T4 and I M2 Ex ib[ia] I	II2 G (1) GD Ex ib[ia] IIC T4 and I M2 Ex ib[ia] I	II2 G (1) GD Ex ib[ia] IIC T4 and I M2 Ex ib[ia] I
• Type of protection acc. to KEMA	04 ATEX 1249	04 ATEX 1249	04 ATEX 1249
Dimensions			
Width	30 mm	30 mm	30 mm
Height	129 mm	129 mm	129 mm
Depth	136.5 mm	136.5 mm	136.5 mm
Weights			
Weight, approx.	255 g	255 g	255 g

Order number	6ES7132-7GD00-0AB0 ET200ISP, EL-MOD., 4DO, DC 23,1V, 20MA	6ES7132-7GD10-0AB0 ET200ISP, EL-MOD., 4DO, DC 17,4V, 27MA	6ES7132-7GD21-0AB0 ET200ISP, EL-MOD., 4DO, DC 17,4V, 40MA	6ES7132-7GD30-0AB0 ET200ISP, EL-MOD., 4DO, DC 25.5V, 22MA
Input current				
from load voltage L+ (without load), max.	340 mA; with actuator supply	300 mA; with actuator supply	400 mA	400 mA
from backplane bus 3.3 V DC, max.	10 mA	10 mA		
Power loss				
Power loss, typ.	2.5 W	2.1 W	2.8 W	2.8 W
Address area				
Address space per module				
• without packing	2 byte	2 byte	2 byte	2 byte
Digital outputs				
Number of digital outputs	4; additionally 1 intrinsically-safe input for L shutdown	4; additionally 1 intrinsically-safe input for L shutdown	4; additionally 1 intrinsically-safe input for L shutdown	4; additionally 1 intrinsically-safe input for L shutdown
Short-circuit protection	Yes	Yes	Yes	Yes
No-load voltage Uao (DC)	23.1 V	17.4 V	17.4 V	25.5 V
Internal resistor Ri		150 ?	167 ?	260 ?
Trend key points E				
• Voltage Ue (DC)	17.1 V	13.2 V	10.7 V	19.8 V
• Current Ie	20 mA	27 mA; 54 mA when outputs connected in parallel	40 mA	22 mA
Output current				
• for signal "1" rated value	0.02 A	0.027 A	0.04 A	0.022 A
Output delay with resistive load				
• "0" to "1", max.	2 ms	2 ms	2 ms	2 ms
• "1" to "0", max.	1.5 ms	1.5 ms	1.5 ms	1.5 ms
Parallel switching of two outputs				
• for uprating	No; for Ex reasons not possible; nor for prede-cessor	Yes	Yes	No
Switching frequency				
• with resistive load, max.	100 Hz	100 Hz	100 Hz	100 Hz
• with inductive load, max.	2 Hz	2 Hz	2 Hz	2 Hz
Cable length				
• shielded, max.	500 m	500 m	500 m	500 m
• unshielded, max.	500 m	500 m	500 m	500 m

Technical specifications (continued)

Order number	6ES7132-7GD00-0AB0	6ES7132-7GD10-0AB0	6ES7132-7GD21-0AB0	6ES7132-7GD30-0AB0
	ET200ISP, EL-MOD., 4DO, DC 23,1V, 20MA	ET200ISP, EL-MOD., 4DO, DC 17,4V, 27MA	ET200ISP, EL-MOD., 4DO, DC 17,4V, 40MA	ET200ISP, EL-MOD., 4DO, DC 25.5V, 22MA
Interrupts/diagnostics/ status information				
Status indicator	Yes	Yes	Yes	Yes
Diagnostic functions	Yes	Yes	Yes	Yes
Alarms				
• Diagnostic alarm	Yes; Parameterizable	Yes; Parameterizable	Yes; Parameterizable	Yes; Parameterizable
Diagnostic messages				
• Diagnostic information readable	Yes	Yes	Yes	Yes
• Wire-break	Yes; R > 10 kohms, I < 100 µA	Yes; R > 10 kohms, I < 100 µA	Yes; R > 10 kohms, I < 100 µA	Yes; R > 10 kohms, I < 100 µA
• Short-circuit	Yes; R< 80 Ohm (one output), R< 40 Ohm (outputs connected in parallel)	Yes; R< 800 ohms (one output), R< 40 ohms (outputs connected in parallel)	Yes; R< 80 Ohm (one output), R< 40 Ohm (outputs connected in parallel)	Yes; R < 80 ohms
Diagnostics indication LED				
• Group error SF (red)	Yes	Yes	Yes	Yes
• Status indicator digital output (green)	Yes	Yes	Yes; Per channel	Yes; Per channel
Parameter				
Remark	14 byte	14 byte		
Diagnostics wire break	Yes	Yes	Yes	Yes
Diagnostics short-circuit	Yes	Yes	Yes	Yes
Behavior on CPU/Master STOP	Substitute a value/keep last value	Substitute a value/keep last value	Substitute a value/keep last value	Substitute a value/keep last value
Ex(i) characteristics				
Maximum values of output circuits (per channel)				
• Co (permissible external capacity), max.			241 nF; For IIC, 1507 nF for IIB	81 nF; For IIC, 651 nF for IIB
• Io (short-circuit current), max.			118 mA	110 mA
• Lo (permissible external inductivity), max.			1.7 mH; For IIC, 10.4 mH for IIB	1.7 mH; For IIC, 11.5 mH for IIB
• Po (power of load), max.			572 mW	764 mW
• Uo (output no-load voltage), max.			19.4 V	27.9 V
• Ta (permissible ambient temperature), max.	70 °C	70 °C		
Potential separation				
Potential separation digital outputs				
• between the channels	No	No	No	No
• between the channels and backplane bus	Yes	Yes	Yes	Yes
• Between the channels and load voltage L+	Yes	Yes	Yes	Yes
Permissible potential difference				
between different circuits			60 V DC/30 V AC	60 V DC/30 V AC
Standards, approvals, certificates				
CE mark	Yes	Yes	Yes	Yes
Highest safety class achievable in safety mode				
• SIL acc. to IEC 61508	No	No	No	No
Use in hazardous areas				
• Type of protection acc. to EN 50020 (CENELEC)	II2 G (1) GD Ex ib[ia] IIC T4 and I M2 Ex ib[ia] I	II2 G (1) GD Ex ib[ia] IIC T4 and I M2 Ex ib[ia] I	II 2 G (1) GD and I M2 Ex ib[ia][iaD] IIC T4; Ex ib [ia] I	II 2 G (1) GD and I M2 Ex ib[ia][iaD] IIC T4; Ex ib [ia] I
• Type of protection acc. to KEMA	04 ATEX 1249	04 ATEX 1249	04 ATEX 1249	04 ATEX 1249
Dimensions				
Width	30 mm	30 mm	30 mm	30 mm
Height	129 mm	129 mm	129 mm	129 mm
Depth	136.5 mm	136.5 mm	136.5 mm	136.5 mm
Weights				
Weight, approx.	255 g	255 g	255 g	255 g

Technical specifications (continued)

Order number	**6ES7132-7HB00-0AB0** ET200ISP, RELAY-MOD., 2DO, UC60V, 2A
Input current	
from load voltage L+ (without load), max.	120 mA
Power loss	
Power loss, typ.	1.1 W
Digital outputs	
Number of digital outputs	2
Short-circuit protection	No
Output current	
• for signal "1" rated value	2 A
Output delay with resistive load	
• "0" to "1", max.	8 ms
• "1" to "0", max.	3 ms
Parallel switching of two outputs	
• for uprating	No
• for redundant control of a load	No
Switching frequency	
• with resistive load, max.	0.5 Hz; See data in manual
• with inductive load, max.	0.2 Hz; See data in manual
Relay outputs	
Switching capacity of contacts	
- with resistive load, up to 60 °C, max.	2 A; See data in manual
- Thermal continuous current, max.	2 A; See data in manual
Cable length	
• shielded, max.	500 m
• unshielded, max.	500 m
Interrupts/diagnostics/status information	
Status indicator	Yes
Alarms	No
Substitute values connectable	Yes
Alarms	
• Diagnostic alarm	Yes
• Hardware interrupt	No
Diagnostic messages	
• Diagnostic information readable	Yes
• Wire-break	No; Cannot be determined in contact power circuit
• Short-circuit	No; Cannot be determined in contact power circuit
Diagnostics indication LED	
• Group error SF (red)	Yes
• Status indicator digital output (green)	Yes; Per channel

Order number	**6ES7132-7HB00-0AB0** ET200ISP, RELAY-MOD., 2DO, UC60V, 2A
Ex(i) characteristics	
Maximum values of output circuits (per channel)	
• Uo (output no-load voltage), max.	60 V
• Um (fault voltage), max.	250 V
• Ta (permissible ambient temperature), max.	70 °C
Potential separation	
Potential separation digital outputs	
• between the channels	Yes
• between the channels and backplane bus	Yes
• Between the channels and load voltage L+	Yes; Channels and power bus
Standards, approvals, certificates	
CE mark	Yes
Highest safety class achievable in safety mode	
• SIL acc. to IEC 61508	No
Use in hazardous areas	
• Type of protection acc. to EN 50020 (CENELEC)	II 2 G and I M2 Ex eibmb IIC T4; Ex eibmb I
• Type of protection acc. to KEMA	07 ATEX 0180
Dimensions	
Width	30 mm
Height	129 mm
Depth	136.5 mm
Weights	
Weight, approx.	255 g

Technical specifications (continued)

Order number	**6ES7193-7CA00-0AA0** ET200ISP, TERM.-MOD. TM-EM/EM60S F. EM	**6ES7193-7CA10-0AA0** ET200ISP, TERM.-MOD. TM-EM/EM60C F. EM	**6ES7193-7CA20-0AA0** ET200ISP, TERM.-MOD. TM-EM/EM60S F. EM	**6ES7193-7CB00-0AA0** ET200ISP, TERM.-MOD. TM-RM/RM
Standards, approvals, certificates				
CE mark	Yes	Yes	Yes	Yes
Use in hazardous areas				
• Type of protection acc. to EN 50020 (CENELEC)	see ET200iSP system	see ET200iSP system	No	see ET200iSP system
• Test number KEMA	04 ATEX 2242	04 ATEX 2242		07 ATEX 0205
Dimensions				
Width	60 mm	60 mm	60 mm	60 mm
Height	190 mm	190 mm	190 mm	190 mm
Depth	52 mm	52 mm	52 mm	52 mm
Weights				
Weight, approx.	275 g	275 g	235 g	340 g

Order number	**6ES7138-7AA00-0AA0** ET200ISP, RESERVE MODULE
Installation type/mounting	
Wall mounting/direct mounting possible	Yes
Digital inputs	
Number of digital inputs	0
Standards, approvals, certificates	
CE mark	Yes
Use in hazardous areas	
• Type of protection acc. to EN 50020 (CENELEC)	II2 G EEx ib IIC T4
• Test number KEMA	04 ATEX 1251
Dimensions	
Width	30 mm
Height	129 mm
Depth	136.5 mm
Weights	
Weight, approx.	180 g

Ordering data

	Article No.
Digital input modules	
Digital input modules EEx i	
8 DI NAMUR For evaluation of NAMUR sensors, connected/non-connected contacts, as well as for recording counter pulses or measuring frequencies • 8 × NAMUR (NAMUR sensor on/off, NAMUR changeover contact) or connected/non-connected inputs (single/changeover contact) • 2 channels optionally usable as counters (max. 5 kHz) or frequency meters (1 Hz ... 5 kHz) • Time tagging 20 ms, rising or falling edge • Wire break monitoring • Short-circuit monitoring • Sensor power supply monitoring • Flutter monitoring	**6ES7131-7RF00-0AB0**
Digital output modules	
Digital output modules EEx i with H-switch-off (external actuator switch-off via H-signal); for switching of solenoid valves, DC relays, signal lamps, actuators	
4 DO DC 23.1 V/20 mA • 4 channels with 20 mA each • Short-circuit monitoring • Wire break monitoring • Configurable connection of substitute value in case of CPU failure • Load-free switching of outputs via external intrinsically-safe signal	**6ES7132-7RD01-0AB0**
4 DO DC 17.4 V/27 mA • 4 channels with 27 mA each or • 2 outputs connected in parallel with 54 mA each • Short-circuit monitoring • Wire break monitoring • Configurable connection of substitute value in the event of CPU failure • Load-free switching of outputs via external intrinsically-safe signal	**6ES7132-7RD11-0AB0**
4 DO DC 17.4 V/40 mA • 4 channels with 40 mA each or • 2 outputs connected in parallel with 80 mA each • Short-circuit monitoring • Wire break monitoring • Configurable connection of substitute value in the event of CPU failure • Load-free switching of outputs via external intrinsically-safe signal	**6ES7132-7RD22-0AB0**

	Article No.
Digital output modules EEx i with L-switch-off (external actuator switch-off via L-signal); for switching of solenoid valves, DC relays, signal lamps, actuators	
4 DO DC 23.1 V/20 mA • 4 channels with 20 mA each • Short-circuit monitoring • Wire break monitoring • Configurable connection of substitute value in the event of CPU failure • Load-free switching of outputs via external intrinsically-safe signal	**6ES7132-7GD00-0AB0**
4 DO DC 17.4 V/27 mA • 4 channels with 27 mA each or • 2 outputs connected in parallel with 54 mA each • Short-circuit monitoring • Wire break monitoring • Configurable connection of substitute value in the event of CPU failure • Load-free switching of outputs via external intrinsically-safe signal	**6ES7132-7GD10-0AB0**
4 DO DC 17.4 V/40 mA • 4 channels with 40 mA each or • 2 outputs connected in parallel with 80 mA each • Short-circuit monitoring • Wire break monitoring • Configurable connection of substitute value in the event of CPU failure • Load-free switching of outputs via external intrinsically-safe signal	**6ES7132-7GD21-0AB0**
4 DO DC 25.5 V/22 mA[1)] • 4 channels with 22 mA each • Short-circuit monitoring • Wire break monitoring • Configurable connection of substitute value in the event of CPU failure • Load-free switching of outputs via external intrinsically-safe signal	**6ES7132-7GD30-0AB0**
Digital output modules EEx e For switching of solenoid valves, DC contactors or indicator lights	
2 DO Relay, 60 V AC/DC, 2 A • Can be plugged onto TM-RM/RM terminal module • Output current up to 2 A with 60 V AC/DC for each of the two relay outputs • Installation up to Ex zone 1 • Configurable connection of substitute value in case of CPU failure	**6ES7132-7HB00-0AB0**

Ordering data

	Article No.
Terminal modules	
ET 200iSP terminal module TM-EM/EM60 For two modules (reserve module, watchdog module and all electronics modules except 2 DO Relay can be plugged in)	
• For hazardous environments	
- TM-EM/EM60S (blue screw-type terminals)	**6ES7193-7CA00-0AA0**
- TM-EM/EM60C (blue spring-loaded terminals)	**6ES7193-7CA10-0AA0**
• For non-hazardous environments	
- TM-EM/EM60S (black screw-type terminals)	**6ES7193-7CA20-0AA0**
ET 200iSP terminal module TM-RM/RM 60 For two modules (electronics module 2 DO Relay and reserve module can be plugged-in)	
• TM-RM/RM 60S (screw-type terminals)	**6ES7193-7CB00-0AA0**

	Article No.
Accessories	
Reserve module For any electronics module	**6ES7138-7AA00-0AA0**
S7-300 rails	
• 585 mm long, suitable for assembly of ET 200iSP in a 650 mm wide wall box	**6ES7390-1AF85-0AA0**
• 885 mm long, suitable for assembly of ET 200iSP in a 950 mm wide wall box	**6ES7390-1AJ85-0AA0**

[1] Can be used with SIMATIC PCS 7 V7.1+SP2 or higher

Additional accessories such as labeling strips or plates, see Industry Mall under "Automation technology - Automation systems - SIMATIC industrial automation systems - IO systems - SIMATIC ET 200 systems for control cabinets" – SIMATIC ET 200iSP".

Overview

Analog input modules

- 4-channel analog input module AI 2 WIRE HART EEx i for current measurement in the range 4 to 20 mA, suitable for connection of two-wire transmitters (with/without HART functionality)
  - Resolution 12 bit + sign
  - Max. load of transmitter 750 Ω
  - Short-circuit and wire break monitoring
- 4-channel analog input module AI 4 WIRE HART EEx i for current measurement in the range 0/4 to 20 mA, suitable for connection of 4-wire transmitters (with/without HART functionality)
  - Resolution 12 bit + sign
  - Max. load of transmitter 750 Ω
  - Wire break monitoring
- 4-channel analog input module AI RTD EEx i for resistance measurement and for temperature measurement per Pt100/Ni100 resistance thermometer
  - Resolution 15 bit + sign
  - 2-wire, 3-wire or 4-wire connection possible
  - Resistance measurements 600 Ω absolute and 1 000 Ω absolute
  - Wire break monitoring
- 4-channel analog input module AI TC EEx i for thermoelectric EMF measurements and for temperature measurement per thermocouple, type B, E, N, J, K, L, S, R, T, U
  - Resolution 15 bit + sign
  - Internal temperature compensation possible using TC sensor module (included in scope of delivery of module)
  - External temperature compensation by means of a temperature value acquired at an analog module of the same ET 200iSP station
  - Wire break monitoring

Analog output modules

- 4-channel analog output module AO I HART EEx i for output of current signals in the range 0/4 to 20 mA to field devices (with/without HART functionality)
  - Resolution 14 bit
  - Parameterizable substitute value in case of CPU failure
  - Short-circuit and wire break monitoring

Extra functions

Temperature compensation

A TC sensor module for internal temperature compensation is provided with the 4 AI TC module, and is fitted on the corresponding terminals of the associated terminal module.

External temperature compensation is possible via a Pt100 on a 4-AI-RTD module.

Design

- The analog electronics modules are installed on terminal modules which must be ordered separately:
  - TM-IM/EM60 terminal modules for one interface module and one watchdog, reserve or electronics module (for versions, see section Interface module)
  - TM-EM/EM60 terminal modules with two slots for watchdog module, reserve module or electronics module (except 2 DO relay), with blue screw-type or spring-loaded terminals for hazardous environments or with black screw-type terminals for non-hazardous environments
- The analog electronics modules are plugged as planned onto terminal modules using screw-type systems (TM-EM/EM60S) or spring-loaded systems (TM-EM/EM60C).
- Using a spare module plugged onto a terminal module TM-EM/EM60S or TM-EM/EM60C, you can reserve a slot for an analog electronics module or close a gap resulting from how the modules were placed. The spare module can be simply replaced by the envisaged electronics module at a later point in time.
- The mechanical coding of the terminal module which is carried out when an electronics module is plugged on for the first time prevents the connection of incorrect replacement modules.
- Hot swapping of individual modules is possible under hazardous conditions.
- The process signals are connected to the terminals of the terminal modules assigned according to the plan, using either conventional screw-type or spring-loaded systems (conductor cross-sections 0.14 mm^2 to max. 2.5 mm^2) depending on the type of module.

Technical specifications

Order number	**6ES7134-7SD00-0AB0**	**6ES7134-7SD51-0AB0**	**6ES7134-7TD00-0AB0**	**6ES7134-7TD50-0AB0**
	ET200ISP, EL-MOD., 4 AI TC	ET200ISP, EL-MOD., 4 AI RTD, PT100/NI100	ET200ISP, EL-MOD., 4 AI, HART, 2-WIRE	ET200ISP, EL-MOD., 4 AI, HART, 4-WIRE
Input current				
from supply voltage L+, max.	30 mA	22 mA	320 mA	30 mA
Output voltage				
Power supply to the transmitters				
• short-circuit proof			Yes	
• Supply current, max.			23 mA; per channel	
Power loss				
Power loss, typ.	0.4 W	0.4 W	2.7 W	0.4 W
Analog inputs				
Number of analog inputs	4	4	4	4
permissible input current for current input (destruction limit), max.			90 mA	50 mA
Cycle time (all channels) max.	320 ms; 66 ms basic conversion time x 4 channels with interference frequency suppression 60 Hz, 80 ms basic conversion time x 4 channels with interference frequency suppression 50 Hz	320 ms; 66 ms basic conversion time x 4 channels with interference frequency suppression 60 Hz, 80 ms basic conversion time x 4 channels with interference frequency suppression 50 Hz	120 ms; 30 ms basic conversion time x 4 channels with 60 Hz, 50 Hz interference frequency suppression	120 ms; 30 ms basic conversion time x 4 channels with 60 Hz, 50 Hz interference frequency suppression
Technical unit for temperature measurement adjustable	Yes	Yes	Yes	Yes
Input ranges				
• Voltage	Yes	No	No	No
• Current	No	No	Yes	Yes
• Thermocouple	Yes	No	No	No
• Resistance thermometer	No	Yes	No	No
• Resistance	No	Yes	No	No
Input ranges (rated values), voltages				
• -80 mV to +80 mV	Yes			
• Input resistance (-80 mV to +80 mV)	1 000 kΩ			
Input ranges (rated values), currents				
• 4 mA to 20 mA			Yes	Yes
• Input resistance (4 mA to 20 mA)				295 Ω
Input ranges (rated values), thermocouples				
• Type B	Yes			
• Input resistance (Type B)	1 000 kΩ			
• Type C	Yes			
• Input resistance (Type C)	1 000 kΩ			
• Type E	Yes			
• Input resistance (Type E)	1 000 kΩ			
• Type J	Yes			
• Input resistance (type J)	1 000 kΩ			
• Type K	Yes			
• Input resistance (Type K)	1 000 kΩ			
• Type L	Yes			
• Input resistance (Type L)	1 000 kΩ			
• Type N	Yes			
• Input resistance (Type N)	1 000 kΩ			
• Type R	Yes			
• Input resistance (Type R)	1 000 kΩ			
• Type S	Yes			
• Input resistance (Type S)	1 000 kΩ			
• Type T	Yes			
• Input resistance (Type T)	1 000 kΩ			
• Type U	Yes			
• Input resistance (Type U)	1 000 kΩ			
Input ranges (rated values), resistance thermometer				
• Ni 100		Yes		
• Input resistance (Ni 100)		2 000 kΩ		

Technical specifications (continued)

Order number	6ES7134-7SD00-0AB0	6ES7134-7SD51-0AB0	6ES7134-7TD00-0AB0	6ES7134-7TD50-0AB0
	ET200ISP, EL-MOD., 4 AI TC	ET200ISP, EL-MOD., 4 AI RTD, PT100/NI100	ET200ISP, EL-MOD., 4 AI, HART, 2-WIRE	ET200ISP, EL-MOD., 4 AI, HART, 4-WIRE
• Pt 100		Yes		
• Input resistance (Pt 100)		2 000 kΩ		
Input ranges (rated values), resistors				
• 0 to 600 ohms		Yes; Also 1000 ohms		
• Input resistance (0 to 600 ohms)		1 000 kΩ		
Thermocouple (TC)				
Temperature compensation				
- internal temperature compensation	Yes; via supplied TC sensor module			
- external temperature compensation with compensations socket	Yes; via temperature value, acquired by an analog module of the same ET 200iSP station			
Characteristic linearization				
• parameterizable	Yes	Yes		
- for thermocouples	Yes			
- for resistance thermometer		Yes		
Cable length				
• shielded, max.	50 m	500 m	500 m	500 m
Analog value generation for the inputs				
Measurement principle	integrating (Sigma-Delta)	integrating (Sigma-Delta)	integrating (Sigma-Delta)	integrating (Sigma-Delta)
Integration and conversion time/ resolution per channel				
• Resolution with overrange (bit including sign), max.	16 bit	16 bit	13 bit	12 bit; + sign
• Integration time, parameterizable	Yes	Yes	No	Yes
• Basic conversion time, including integration time (ms)	80 ms at 50 Hz; 66 ms at 60 Hz	80 ms at 50 Hz; 66 ms at 60 Hz		30 ms
- additional conversion time for wire-break monitoring	5 ms	5 ms		
• Interference voltage suppression for interference frequency f1 in Hz	50 / 60 Hz	50 / 60 Hz	50 / 60 Hz	50 / 60 Hz
Smoothing of measured values				
• parameterizable	Yes; in 4 stages	Yes; in 4 stages	Yes; in 4 stages	Yes; in 4 stages
• Step: None	Yes; 1 x cycle time	Yes; 1 x cycle time	Yes; 1 x cycle time	Yes; 1 x cycle time
• Step: low	Yes; 4 x cycle time	Yes; 4 x cycle time	Yes; 4 x cycle time	Yes; 4 x cycle time
• Step: Medium	Yes; 32 x cycle time	Yes; 32 x cycle time	Yes; 32 x cycle time	Yes; 32 x cycle time
• Step: High	Yes; 64 x cycle time	Yes; 64 x cycle time	Yes; 64 x cycle time	Yes; 64 x cycle time
Encoder				
Connection of signal encoders				
• for current measurement as 2-wire transducer			Yes	
- Burden of 2-wire transmitter, max.			750 Ω	
• for current measurement as 4-wire transducer				Yes
• for resistance measurement with two-wire connection		Yes		
• for resistance measurement with three-wire connection		Yes		
• for resistance measurement with four-wire connection		Yes		

Technical specifications (continued)

Order number	6ES7134-7SD00-0AB0	6ES7134-7SD51-0AB0	6ES7134-7TD00-0AB0	6ES7134-7TD50-0AB0
	ET200ISP, EL-MOD., 4 AI TC	ET200ISP, EL-MOD., 4 AI RTD, PT100/NI100	ET200ISP, EL-MOD., 4 AI, HART, 2-WIRE	ET200ISP, EL-MOD., 4 AI, HART, 4-WIRE
Errors/accuracies				
Linearity error (relative to input range), (+/-)	0.015 %	0.015 %	0.015 %	0.015 %
Temperature error (relative to input range), (+/-)	0.02 %/K	0.02 %/K	0.005 %/K	0.005 %/K
Crosstalk between the inputs, min.	-50 dB	-50 dB	-50 dB	-50 dB
Repeat accuracy in steady state at 25 °C (relative to input area), (+/-)	0.01 %	0.01 %	0.01 %	0.01 %
Operational error limit in overall temperature range				
• Voltage, relative to input area, (+/-)	0.15 %			
• Current, relative to input area, (+/-)			0.15 %	0.15 %
• Resistance thermometer, relative to input area, (+/-)		0.15 %; Applies to resistances standard ±0.8 K, climatic ±0.3 K		
Basic error limit (operational limit at 25 °C)				
• Voltage, relative to input area, (+/-)	0.1 %			
• Current, relative to input area, (+/-)			0.1 %	0.1 %
• Resistance thermometer, relative to input area, (+/-)		0.1 %; Applies to resistances standard ±0.5 K, climatic ±0.2 K		
Interference voltage suppression for f = n x (f1 +/- 1 %), f1 = interference frequency				
• Series mode interference (peak value of interference < rated value of input range), min.	70 dB	70 dB	70 dB	70 dB
• Common mode interference, min.	90 dB	90 dB		
Interrupts/diagnostics/ status information				
Alarms				
• Diagnostic alarm	Yes; Parameterizable	Yes	Yes; Parameterizable	Yes; Parameterizable
• Limit value alarm	Yes; Parameterizable	Yes	Yes; Parameterizable	Yes; Parameterizable
Diagnostic messages				
• Diagnostic information readable	Yes	Yes	Yes	Yes
• Wire-break		Yes	Yes	Yes
• Short-circuit		Yes	Yes	
• Group error		Yes		
Diagnostics indication LED				
• Group error SF (red)	Yes	Yes	Yes	Yes
Potential separation				
Potential separation analog inputs				
• between the channels	Yes; Functional, yes	No	No	No
• between the channels and backplane bus	Yes	Yes	Yes	Yes
• Between the channels and load voltage L+		Yes; Channels and power bus		

Technical specifications (continued)

Order number	6ES7134-7SD00-0AB0	6ES7134-7SD51-0AB0	6ES7134-7TD00-0AB0	6ES7134-7TD50-0AB0
	ET200ISP, EL-MOD., 4 AI TC	ET200ISP, EL-MOD., 4 AI RTD, PT100/NI100	ET200ISP, EL-MOD., 4 AI, HART, 2-WIRE	ET200ISP, EL-MOD., 4 AI, HART, 4-WIRE
Standards, approvals, certificates				
CE mark	Yes	Yes	Yes	Yes
Highest safety class achievable in safety mode				
• Performance level according to EN ISO 13849-1:2008	none	none	none	none
• SIL acc. to IEC 61508	No	No	No	No
Use in hazardous areas				
• Type of protection acc. to EN 50020 (CENELEC)	II2 G (1) GD Ex ib[ia] IIC T4 and I M2 Ex ib[ia] I	II2 G (1) GD Ex ib[ia] IIC T4 and I M2 Ex ib[ia] I	II2 G (1) GD Ex ib[ia] IIC T4 and I M2 Ex ib[ia] I	II2 G (1) GD Ex ib[ia] IIC T4 and I M2 Ex ib[ia] I
• Type of protection acc. to KEMA	04 ATEX 1246	04 ATEX 1247	04 ATEX 1244	04 ATEX 1245
Dimensions				
Width	30 mm	30 mm	30 mm	30 mm
Height	129 mm	129 mm	129 mm	129 mm
Depth	136.5 mm	136.5 mm	136.5 mm	136.5 mm
Weights				
Weight, approx.	230 g	230 g	230 g	230 g

Order number	6ES7135-7TD00-0AB0
	ET200ISP, EL-MOD., 4 AO, 4-20MA, HART
Input current	
from load voltage L+ (without load), max.	330 mA
Power loss	
Power loss, typ.	2.7 W
Analog outputs	
Number of analog outputs	4
Cycle time (all channels) max.	3.6 ms
Output ranges, current	
• 0 to 20 mA	Yes
• 4 mA to 20 mA	Yes
Connection of actuators	
• for current output two-wire connection	Yes
Load impedance (in rated range of output)	
• with current outputs, max.	750 ?
Cable length	
• shielded, max.	500 m
Analog value generation for the outputs	
Integration and conversion time/ resolution per channel	
• Resolution with overrange (bit including sign), max.	14 bit
Settling time	
• for resistive load	4 ms
• for capacitive load	40 ms
• for inductive load	40 ms
Errors/accuracies	
Linearity error (relative to output range), (+/-)	0.015 %
Temperature error (relative to output range), (+/-)	0.005 %/K
Crosstalk between the outputs, min.	-50 dB
Repeat accuracy in steady state at 25 °C (relative to output area), (+/-)	0.01 %

Order number	6ES7135-7TD00-0AB0
	ET200ISP, EL-MOD., 4 AO, 4-20MA, HART
Operational error limit in overall temperature range	
• Current, relative to output area, (+/-)	0.15 %
Basic error limit (operational limit at 25 °C)	
• Current, relative to output area, (+/-)	0.1 %
Interrupts/diagnostics/status information	
Substitute values connectable	Yes
Alarms	
• Diagnostic alarm	Yes
Diagnostic messages	
• Diagnostic information readable	Yes
• Wire-break	Yes
• Short-circuit	Yes
Diagnostics indication LED	
• Group error SF (red)	Yes
Potential separation	
Potential separation analog outputs	
• between the channels	No
• between the channels and backplane bus	Yes
Standards, approvals, certificates	
CE mark	Yes
Use in hazardous areas	
• Type of protection acc. to EN 50020 (CENELEC)	II2 G (1) GD Ex ib[ia] IIC T4 and I M2 Ex ib[ia] I
• Type of protection acc. to KEMA	04 ATEX 1250
Dimensions	
Width	30 mm
Height	129 mm
Depth	136.5 mm
Weights	
Weight, approx.	265 g

Technical specifications (continued)

Order number	**6ES7193-7CA00-0AA0** ET200ISP, TERM.-MOD. TM-EM/EM60S F. EM	**6ES7193-7CA10-0AA0** ET200ISP, TERM.-MOD. TM-EM/EM60C F. EM	**6ES7193-7CA20-0AA0** ET200ISP, TERM.-MOD. TM-EM/EM60S F. EM	**6ES7193-7CB00-0AA0** ET200ISP, TERM.-MOD. TM-RM/RM
Standards, approvals, certificates				
CE mark	Yes	Yes	Yes	Yes
Use in hazardous areas				
• Type of protection acc. to EN 50020 (CENELEC)	see ET200iSP system	see ET200iSP system	No	see ET200iSP system
• Test number KEMA	04 ATEX 2242	04 ATEX 2242		07 ATEX 0205
Dimensions				
Width	60 mm	60 mm	60 mm	60 mm
Height	190 mm	190 mm	190 mm	190 mm
Depth	52 mm	52 mm	52 mm	52 mm
Weights				
Weight, approx.	275 g	275 g	235 g	340 g

Order number	**6ES7138-7AA00-0AA0** ET200ISP, RESERVE MODULE
Installation type/mounting	
Wall mounting/direct mounting possible	Yes
Digital inputs	
Number of digital inputs	0
Standards, approvals, certificates	
CE mark	Yes
Use in hazardous areas	
• Type of protection acc. to EN 50020 (CENELEC)	II2 G EEx ib IIC T4
• Test number KEMA	04 ATEX 1251
Dimensions	
Width	30 mm
Height	129 mm
Depth	136.5 mm
Weights	
Weight, approx.	180 g

Ordering data

	Article No.
Analog input modules	
Analog input modules EEx i	
4 AI I 2 WIRE HART For measuring currents with 2-wire transmitters with/without HART functionality • 4 × 4 ... 20 mA, HART, 2-wire transmitter • Transmitter load: max. 750 Ω • Resolution 12 bit + sign • Short-circuit monitoring • Wire break monitoring	**6ES7134-7TD00-0AB0**
4 AI I 4 WIRE HART For measuring currents with 4-wire transmitters with/without HART functionality • 4 × 0/4 ... 20 mA, HART, 4-wire transmitter • Transmitter load: max. 750 Ω • Resolution 12 bit + sign • Wire break monitoring	**6ES7134-7TD50-0AB0**
4 AI RTD For measuring resistances as well as for temperature measurements with resistance thermometers • 4 × RTD, resistance thermometer Pt100/Ni100 • 2-, 3-, 4-wire • Resolution 15 bit + sign • Short-circuit monitoring • Wire break monitoring	**6ES7134-7SD51-0AB0**
4 AI TC For measuring thermal e.m.f. as well as for temperature measurements with thermocouples • 4 × TC (thermocouples) • Type B [PtRh-PtRh] • Type N [NiCrSi-NiSi] • Type E [NiCr-CuNi] • Type R [PtRh-Pt] • Type S [PtPh-Pt] • Type J [Fe-CuNi] • Type L [Fe-CuNi] • Type T [Cu-CuNi] • Type K [NiCr-Ni] • Type U [Cu-CuNi] • Resolution 15 bit + sign • Internal compensation of cold junction temperature possible using TC sensor module (included in scope of delivery of module) • External temperature compensation via Pt100, connected to RTD module of same ET 200iSP station • Wire break monitoring	**6ES7134-7SD00-0AB0**

	Article No.
Analog output modules	
Analog output modules EEx i	
4 AO I HART For output of currents to field devices with/without HART functionality • 4 × 0/4 ... 20 mA, HART (max. load 750 Ω) • Resolution 14 bit • Short-circuit monitoring • Wire break monitoring • Parameterizable substitute value in case of CPU failure	**6ES7135-7TD00-0AB0**
Terminal modules	
ET 200iSP terminal module TM-EM/EM60 For two modules (reserve module, watchdog module and all electronics modules except 2 DO Relay can be plugged in)	
• For hazardous environments	
- TM-EM/EM60S (blue screw-type terminals)	**6ES7193-7CA00-0AA0**
- TM-EM/EM60C (blue spring-loaded terminals)	**6ES7193-7CA10-0AA0**
• For non-hazardous environments	
- TM-EM/EM60S (black screw-type terminals)	**6ES7193-7CA20-0AA0**
Accessories	
Reserve module For any electronics module	**6ES7138-7AA00-0AA0**
S7-300 mounting rails	
• 585 mm long, suitable for assembly of ET 200iSP in a 650 mm wide wall box	**6ES7390-1AF85-0AA0**
• 885 mm long, suitable for assembly of ET 200iSP in a 950 mm wide wall box	**6ES7390-1AJ85-0AA0**

Additional accessories such as labeling strips or plates, see Industry Mall under "Automation technology - Automation systems - SIMATIC industrial automation systems - IO systems - SIMATIC ET 200 systems for control cabinets" – SIMATIC ET 200iSP".

Overview

The electronics modules of the SIMATIC ET 200iSP distributed I/O system equipped with safety functions can be used together with the safety-related automation systems of the SIMATIC PCS 7 process control system for the implementation of safety applications. The input modules record the process signals, evaluate them, and prepare them for addional processing by the automation system. The output modules convert the safety-related signals output by the automation systems so that they are suitable for controlling the connected actuators.

F digital input modules

- 8 F-DI Ex NAMUR
  Safety-related digital input module for evaluating the signals from IEC 60947-5-6/NAMUR sensors and connected/non-connected mechanical contacts in hazardous and non-hazardous areas
  - SIL 3/Cat. 3/PLe with 8 inputs (1-channel/1oo1 evaluation) or 4 inputs (2-channel/1oo2 evaluation)
  - 8 short-circuit-proof sensor supplies (8 V DC) for 1 channel each
  - Inputs and sensor supplies electrically isolated from power bus and backplane bus
  - Diagnostics evaluation (deactivated for non-connected mechanical contacts)
  - Internal diagnostics buffer
  - Programmable diagnostics interrupt
  - Support of time stamping
  - Channel-selective passivation
  - Firmware update using HW Config possible
  - Exclusively for safety mode
  - LED displays for safety mode, group errors and channel status/fault

F digital output modules

- 4 F-DO Ex DC 17.4 V/40 mA
  Safety-related digital output module for controlling actuators in hazardous and non-hazardous areas, e.g. solenoid valves, DC current relays or indicator lamps
  - SIL 3/Cat. 3/PLe with 4 outputs, P/P-switching
  - Electrical isolation from power bus and backplane bus
  - Rated load voltage 17.4 V DC
  - Max. output current 40 mA
  - Performance enhancement through parallel connection of two digital outputs for one actuator
  - Short-circuit, overload and wire-break monitoring
  - Configurable diagnostics
  - Internal diagnostics buffer
  - Programmable diagnostics interrupt
  - Channel-selective passivation
  - Firmware update using HW Config possible
  - Exclusively for safety mode
  - LED displays for safety mode, group errors and channel status/fault

F analog input modules

- 4 F-AI Ex HART (0 ... 20 mA or 4 ... 20 mA)
  Safety-related digital input module for evaluating the signals from current sensors in hazardous and non-hazardous areas, e.g. 2-wire transmitters and HART field devices
  - SIL 3/Cat. 3/PLe with 4 inputs of one module (1-channel/1oo1 evaluation) or 4 inputs of two modules (2-channel/1oo2 evaluation)
  - Measuring ranges: 0 ... 20 mA or 4 ... 20 mA
  - Resolution 15 bit + sign
  - HART communication in measuring range 4 ... 20 mA
  - 4 short-circuit-proof sensor supplies (min. 12 V DC; max. 26 V DC) for 1 channel each
  - Inputs and sensor supplies electrically isolated from backplane bus
  - Configurable diagnostics
  - Programmable diagnostics interrupt
  - Internal diagnostics buffer
  - Firmware update using HW Config possible
  - Exclusively for safety mode
  - LED displays for safety mode, group errors, channel faults and HART status per channel

Design

- The safety-related electronics modules are installed on terminal modules which must be ordered separately:
  - TM-IM/EM60 terminal modules for one interface module and one watchdog, reserve or electronics module (for versions, see section Interface module)
  - TM-EM/EM60 terminal modules with two slots for watchdog module, reserve module or electronics module (except 2 DO relay), with blue screw-type or spring-loaded terminals for hazardous environments or with black screw-type terminals for non-hazardous environments
- The safety-related electronics modules are plugged as planned onto terminal modules using screw-type systems (TM-EM/EM60S) or spring-loaded systems (TM-EM/EM60C).
- Using a spare module plugged onto a terminal module TM-EM/EM60S or TM-EM/EM60C, you can reserve a slot for an safety-related electronics module or close a gap resulting from the design. The spare module can be simply replaced by the envisaged electronics module at a later point in time.
- The mechanical coding of the terminal module which is carried out when an electronics module is plugged on for the first time prevents the connection of incorrect replacement modules.
- Hot swapping of individual modules is possible under hazardous conditions.
- The process signals are connected to the terminals of the terminal modules assigned according to the plan, using either conventional screw-type or spring-loaded systems (conductor cross-sections 0.14 mm^2 to max. 2.5 mm^2) depending on the type of module.

Technical specifications

Order number	**6ES7138-7FN00-0AB0** ET200ISP, 8F-DI NAMUR EX, FAILSAFE
Input current	
from supply voltage L+, max.	150 mA; int. Powerbus
Encoder supply	
Number of outputs	8
Type of output voltage	8 V DC
Power loss	
Power loss, typ.	1.4 W
Address area	
Occupied address area	
• Inputs	6 byte
• Outputs	4 byte
Digital inputs	
Number of digital inputs	8
Number of NAMUR inputs	8
Input voltage	
• Type of input voltage	DC
Input current	
• for signal "1", typ.	9.5 mA
Input delay (for rated value of input voltage)	
for standard inputs	
- at "0" to "1", min.	0.7 ms
- at "0" to "1", max.	16 ms; Parameterizable
- at "1" to "0", min.	0.7 ms
- at "1" to "0", max.	16 ms; Parameterizable
Cable length	
• shielded, max.	500 m
• unshielded, max.	200 m
Encoder	
Number of connectable encoders, max.	8
Connectable encoders	
• NAMUR encoder	Yes
NAMUR encoder	
• Input current for signal "0", max.	1.2 mA
• Input current for signal "1", min.	2.1 mA

Order number	**6ES7138-7FN00-0AB0** ET200ISP, 8F-DI NAMUR EX, FAILSAFE
Interrupts/diagnostics/ status information	
Status indicator	Yes
Diagnostic functions	Yes
Alarms	
• Diagnostic alarm	Yes; Parameterizable
• Hardware interrupt	No
Diagnostic messages	
• Diagnostic information readable	Yes
• Wire-break	Yes; NAMUR encoders or single contact with 10 kOhm parallel resistor
• Short-circuit	Yes; R load < 150 ohms with NAMUR sensor/sensor and NAMUR changeover contact/sensor to DIN 19234
Diagnostics indication LED	
• Group error SF (red)	Yes
Parameter	
Diagnostics wire break	channel by channel
Diagnostics short-circuit	channel by channel
Potential separation	
Potential separation digital inputs	
• between the channels	No
• between the channels and backplane bus	Yes
Permissible potential difference	
between different circuits	60 V DC/30 V AC
Isolation	
Isolation tested with	350 V AC/1 min between the shield and backplane bus connection 350 V AC/1 min between the shield and I/O 2830 V AC/1 min between backplane bus connection and I/O

Technical specifications (continued)

Order number	**6ES7138-7FN00-0AB0** ET200ISP, 8F-DI NAMUR EX, FAILSAFE
Standards, approvals, certificates	
CE mark	Yes
Highest safety class achievable in safety mode	
• Performance level according to EN ISO 13849-1:2008	PLe
• SIL acc. to IEC 61508	SIL 3
Use in hazardous areas	
• Type of protection acc. to EN 50020 (CENELEC)	II 2 G (1) GD Ex ib[ia Ga][ia IIIC Da] IIC T4 GB and I M2 Ex ib[ia Ma] I Mb
• Type of protection acc. to KEMA	10 ATEX 0056

Order number	**6ES7138-7FN00-0AB0** ET200ISP, 8F-DI NAMUR EX, FAILSAFE
Dimensions	
Width	30 mm
Height	129 mm
Depth	136.5 mm
Weights	
Weight, approx.	288 g

Order number	**6ES7138-7FD00-0AB0** ET200ISP, 4F-DO 40MA EX, FAILSAFE
Input current	
from load voltage L+ (without load), max.	510 mA; int. Powerbus
Power loss	
Power loss, typ.	5.3 W; max.
Digital outputs	
Number of digital outputs	4
Short-circuit protection	Yes
• Response threshold, typ.	Depending on the "short-circuit level" parameter
Controlling a digital input	No
No-load voltage Uao (DC)	17.4 V
Internal resistor Ri	167 Ω
Load resistance range	
• lower limit	270 Ω
• upper limit	18 kΩ
Trend key points E	
• Voltage Ue (DC)	10 V
• Current Ie	40 mA
Output voltage	
• for signal "1", min.	max. 17.4 V
Output current	
• for signal "0" residual current, max.	10 µA
Parallel switching of two outputs	
• for uprating	Yes
• for redundant control of a load	No
Switching frequency	
• with resistive load, max.	30 Hz
• with inductive load, max.	2 Hz
Cable length	
• shielded, max.	500 m
• unshielded, max.	500 m
Interrupts/diagnostics/status information	
Status indicator	Yes
Substitute values connectable	Yes
Alarms	
• Diagnostic alarm	Yes; Parameterizable

Order number	**6ES7138-7FD00-0AB0** ET200ISP, 4F-DO 40MA EX, FAILSAFE
Diagnostic messages	
• Diagnostic information readable	Yes
• Wire-break	Yes
• Short-circuit	Yes
Diagnostics indication LED	
• Group error SF (red)	Yes
• Status indicator digital output (green)	Yes
Parameter	
Diagnostics wire break	Yes
Diagnostics short-circuit	Yes
Potential separation	
Potential separation digital outputs	
• between the channels	No
• between the channels and backplane bus	Yes
• Between the channels and load voltage L+	Yes
Permissible potential difference	
between different circuits	60 V DC/30 V AC
Standards, approvals, certificates	
CE mark	Yes
Highest safety class achievable in safety mode	
• Performance level according to EN ISO 13849-1:2008	PLe
• SIL acc. to IEC 61508	SIL 3
Use in hazardous areas	
• Type of protection acc. to EN 50020 (CENELEC)	II 2 G (1) GD Ex ib[ia Ga][ia IIIC Da] IIC T4 GB and I M2 Ex ib[ia Ma] I Mb
• Type of protection acc. to KEMA	10 ATEX 0057
Dimensions	
Width	30 mm
Height	129 mm
Depth	136.5 mm
Weights	
Weight, approx.	285 g

Technical specifications (continued)

Order number	**6ES7138-7FA00-0AB0** ET200ISP, 4F-AI HART EX, FAILSAFE
Input current	
from supply voltage L+, max.	490 mA; int. Powerbus
Output voltage	
Power supply to the transmitters	
• short-circuit proof	Yes
• Supply current, max.	25 mA; Plus 4 mA per channel
Power loss	
Power loss, max.	5.4 W
Address area	
Address space per module	
• Address space per module, max.	16 byte; 12 bytes in the I area / 4 bytes in the O area
Analog inputs	
Number of analog inputs	4
Cycle time (all channels) max.	See data in manual
Input ranges	
• Voltage	No
• Current	Yes
• Thermocouple	No
• Resistance thermometer	No
• Resistance	No
Input ranges (rated values), currents	
• 0 to 20 mA	Yes
• 4 mA to 20 mA	Yes
Cable length	
• shielded, max.	500 m
Analog value generation for the inputs	
Measurement principle	integrating (Sigma-Delta)
Integration and conversion time/ resolution per channel	
• Resolution with overrange (bit including sign), max.	16 bit
• Integration time, parameterizable	Yes
• Interference voltage suppression for interference frequency f1 in Hz	50 / 60 Hz
Smoothing of measured values	
• parameterizable	Yes; in 4 stages
• Step: None	Yes; 1 x cycle time
• Step: low	Yes; 4 x cycle time
• Step: Medium	Yes; 32 x cycle time
• Step: High	Yes; 64 x cycle time
Encoder	
Connection of signal encoders	
• for current measurement as 2-wire transducer	Yes
- Burden of 2-wire transmitter, max.	750 Ω

Order number	**6ES7138-7FA00-0AB0** ET200ISP, 4F-AI HART EX, FAILSAFE
Errors/accuracies	
Linearity error (relative to input range), (+/-)	0.015 %
Temperature error (relative to input range), (+/-)	0.005 %/K
Crosstalk between the inputs, min.	-50 dB
Repeat accuracy in steady state at 25 °C (relative to input area), (+/-)	0.015 %
Operational error limit in overall temperature range	
• Current, relative to input area, (+/-)	0.35 %
Basic error limit (operational limit at 25 °C)	
• Current, relative to input area, (+/-)	0.1 %
Interference voltage suppression for f = n x (f1 +/- 1 %), f1 = interference frequency	
• Series mode interference (peak value of interference < rated value of input range), min.	40 dB
• Common mode interference, min.	50 dB
Interrupts/diagnostics/status information	
Alarms	
• Diagnostic alarm	Yes; Parameterizable
Diagnostic messages	
• Diagnostic information readable	Yes
• Wire-break	Yes
• Short-circuit	Yes
Diagnostics indication LED	
• Group error SF (red)	Yes
Potential separation	
Potential separation analog inputs	
• between the channels	No
• between the channels and backplane bus	Yes
• Between the channels and load voltage L+	Yes; Power bus
Permissible potential difference	
between different circuits	60 V DC/30 V AC
Standards, approvals, certificates	
CE mark	Yes
Highest safety class achievable in safety mode	
• Performance level according to EN ISO 13849-1:2008	PLe
• SIL acc. to IEC 61508	SIL 3
Use in hazardous areas	
• Type of protection acc. to EN 50020 (CENELEC)	II 2 G (1) GD Ex ib[ia Ga][ia IIIC Da] IIC T4 GB and I M2 Ex ib[ia Ma] I Mb
• Type of protection acc. to KEMA	10 ATEX 0058
Dimensions	
Width	30 mm
Height	129 mm
Depth	136.5 mm
Weights	
Weight, approx.	299 g

Technical specifications (continued)

Order number	**6ES7138-7AA00-0AA0** ET200ISP, RESERVE MODULE
Installation type/mounting	
Wall mounting/direct mounting possible	Yes
Digital inputs	
Number of digital inputs	0
Standards, approvals, certificates	
CE mark	Yes
Use in hazardous areas	
• Type of protection acc. to EN 50020 (CENELEC)	II2 G EEx ib IIC T4
• Test number KEMA	04 ATEX 1251
Dimensions	
Width	30 mm
Height	129 mm
Depth	136.5 mm
Weights	
Weight, approx.	180 g

Ordering data

	Article No.
Safety-related electronic modules	
F digital input modules	
8 F-DI Ex NAMUR For evaluating the signals from IEC 60947-5-6/NAMUR sensors and connected/non-connected mechanical contacts in hazardous and non-hazardous areas • SIL3/Cat.3/PLe with 8 inputs (1-channel/1oo1 evaluation) or 4 inputs (2-channel/1oo2 evaluation)	**6ES7138-7FN00-0AB0**
F digital output modules	
4 F-DO Ex 17.4 V DC/40 mA For controlling actuators in hazardous and non-hazardous areas, e.g. solenoid valves, DC current relays or indicator lamps • SIL 3/Cat. 3/PLe with 4 outputs, P/P-switching	**6ES7138-7FD00-0AB0**
F analog input modules	
4 F-AI Ex HART (0 ... 20 mA or 4 ... 20 mA) For evaluating the signals from current sensors in hazardous and non-hazardous areas, e.g. 2-wire transmitters and HART field devices • SIL 3/Cat. 3/PLe with 4 inputs of one module (1-channel/1oo1 evaluation) or 4 inputs of two modules (2-channel/1oo2 evaluation) • Resolution 15 bit + sign • HART communication in measuring range 4 ... 20 mA	**6ES7138-7FA00-0AB0**

	Article No.
Terminal modules	
ET 200iSP terminal module TM-EM/EM60 For two modules (reserve module, watchdog module and all electronics modules except 2 DO Relay can be plugged in)	
• For hazardous environments	
- TM-EM/EM60S (blue screw-type terminals)	**6ES7193-7CA00-0AA0**
- TM-EM/EM60C (blue spring-loaded terminals)	**6ES7193-7CA10-0AA0**
• For non-hazardous environments	
- TM-EM/EM60S (black screw-type terminals)	**6ES7193-7CA20-0AA0**
Accessories	
Reserve module For any electronics module	**6ES7138-7AA00-0AA0**
S7-300 mounting rails	
• 585 mm long, suitable for assembly of ET 200iSP in a 650 mm wide wall box	**6ES7390-1AF85-0AA0**
• 885 mm long, suitable for assembly of ET 200iSP in a 950 mm wide wall box	**6ES7390-1AJ85-0AA0**

Additional accessories such as labeling strips or plates, see Industry Mall under "Automation technology - Automation systems - SIMATIC industrial automation systems - IO systems - SIMATIC ET 200 systems for control cabinets" – SIMATIC ET 200iSP".

Watchdog Module

Overview

The watchdog module has two fundamental functions:

- Monitoring of the ET 200iSP remote I/O station for hardware failures (hardware lifebeat); external, applicative failure monitoring is also possible via an I/O address area of the module
- Intrinsically-safe power supply for external actuator switch-off

The watchdog module must be plugged onto a terminal module (order separately). The following terminal modules are suitable for this:

- TM-IM/EM60 terminal modules for one interface module and one watchdog, reserve or electronics module (for versions, see section Interface module)
- TM-EM/EM60 terminal modules with two slots for watchdog module, reserve module or electronics modules (except 2 DO relay):
  - with blue screw-type or spring-loaded terminals for hazardous environments
  - with black screw-type terminals for non-hazardous environments

The first slot directly next to the interface module is provided for the watchdog module.

Technical specifications

Order number	**6ES7138-7BB00-0AB0** ET 200ISP, WATCHDOG MOD.
Digital inputs	
Number of digital inputs	0
Dimensions	
Width	30 mm
Height	129 mm
Depth	136.5 mm

Ordering data

	Article No.
Watchdog module	
Watchdog module For failure monitoring and for the intrinsically-safe power supply of an external actuator switch-off	**6ES7138-7BB00-0AB0**
Terminal modules	
ET 200iSP terminal module TM-EM/EM60 For two modules (reserve module, watchdog module and all electronics modules except 2 DO Relay can be plugged in)	
• For hazardous environments	
- TM-EM/EM60S (blue screw-type terminals)	**6ES7193-7CA00-0AA0**
- TM-EM/EM60C (blue spring-loaded terminals)	**6ES7193-7CA10-0AA0**
• For non-hazardous environments	
- TM-EM/EM60S (black screw-type terminals)	**6ES7193-7CA20-0AA0**

Overview

Tasks of the RS 485-iS coupler

- Conversion of the electrical PROFIBUS DP RS 485 transmission technology into the intrinsically-safe RS 485-iS transmission technology with a transmission rate of 1.5 Mbit/s
- Required to connect intrinsically-safe PROFIBUS DP stations, e.g. ET 200iSP or devices from other vendors with Ex i DP connection
- Functionality as a safety barrier
- Additional use as a repeater in the hazardous area
- Passive bus station (no configuration necessary)
- Certified according to ATEX 100a

Design

- The RS 485-iS coupler is an open unit; assembly is only permissible in enclosures, cabinets or rooms for electrical equipment.
- The RS 485-iS coupler is approved for use in Zone 2 hazardous areas. For this purpose, it must be fitted in an enclosure complying at least with degree of protection IP54. A manufacturer's declaration for zone 2 (according to EN 50021) is required for the enclosure and the necessary cable glands.
- The RS 485-iS coupler can be used in a horizontal or vertical position.
- Installation is on a SIMATIC S7-300 rail.
- Diagnostics LEDs on the front panel signal the operating status.

Connection to PROFIBUS DP

- Connection to standard PROFIBUS DP via standard Sub-D socket (at the bottom on the RS 485-iS coupler, behind the right front door).

Integrated bus connection for PROFIBUS DP with RS 485-iS transmission technology

- Connection of PROFIBUS DP with RS 485-iS transmission technology via screw terminals (at the top of the RS 485-iS coupler, behind the right front door)
- The last bus node on the intrinsically safe PROFIBUS DP segment (not further RS 485-iS couplers) must be terminated by a selectable terminating resistor using the connector, article number 6ES7972-0DA60-0XA0.

Technical specifications

Technical data RS 485-IS coupler	
Dimensions and weight	
Dimensions W x H x D (mm)	80 x 125 x 130
Weight	Approx. 500 g
Technical data - General	
Degree of protection	IP20
Ambient temperature	- 20 °C to + 60 °C
Standards and approvals	
• PROFIBUS	IEC 61784-1:2002 Ed1 CP 3/1
• EU directive	94/9/EG (ATEX 100a)
• CENELEC	II 3 (2) G EEx nA[ib] IIC T4
• UL and CSA	Class I, Division2, Group A, B, C, D T4 Class I Zone 2, Group IIC T4 AIS Class I, Divison 1, Group A, B, C, D [Aexib] IIC, Class I, Zone1, 2, Group IIC
• FM	Class I, Division2, Group A, B, C, D T4 Class I Zone 2, Group IIC T4 AIS Class I, Divison 1, Group A, B, C, D [Aexib] IIC, Class I, Zone1, 2, Group IIC
• IEC	IEC61131-2, Part 2
• CE	Conforming with 89/336/EWG Conforming with 73/23/EWG
• Ship-building certification	Classification companies • ABS (American Bureau of Shipping) • BV (Bureau Veritas) • DNV (Det Norske Veritas) • GL (Germanischer Lloyd) • LRD (Lloyds Register of Shipping) • Class NK (Nippon Kaiji Kyokai)
Module-Specific Specifications	
Transfer rate on PROFIBUS DP, PROFIBUS RS 485-IS	9.6; 19.2; 45.45; 93.75; 187.5; 500 kbit/s 1.5 Mbps
Bus-Protocol	PROFIBUS DP

Technical data RS 485-IS coupler		
Voltages, Currents, Potentials		
Nominal supply voltage for RS 485-IS coupler	24 V DC (20.4 to 28.8 V)	
• Polarity reversal protection	Yes	
• Voltage drop bypass	Min. 5 ms	
Potential isolation for 24 V power supply		
• to PROFIBUS DP	Yes	
- tested with	500 V DC	
• to PROFIBUS RS 485-IS	Yes	
- tested with	AC 500 V	
Current consumption RS 485-IS coupler (24 V DC), max.	150 mA	
Power loss of the module, typically	3 Watts	
Status, alarms, diagnostics		
Status display	no	
Alarms	None	
Diagnostic functions	Yes	
• Bus monitoring PROFIBUS DP (primary)	Yellow LED "DP1"	
• Bus monitoring PROFIBUS RS 485-IS (secondary)	Yellow LED "DP2"	
• Monitoring 24 V power supply	Green LED "ON"	
Technical safety notice		
V_{DC}	±4.2 V	
I_{SC}	±93 mA	
P_0	0.1 Watts	
V_{max}	±4.2 V	
L_I	0	
C_i	0	
U_m	AC 250 V	
T_a	–25 ... +60 °C	
RS 485-iS segment		
permitted cable length on a single line	RS 485–iS	DP Ex i
• 9.6 to 187.5 Kbps	1,000 m	200 m
• 500 kbit/s	400 m	200 m
• 1.5 Mbps	200 m	200 m
Number of PROFIBUS DP nodes that can be connected, max.	31	16
PROFIBUS RS 485-IS bus termination switch	integrated, can be added	

Ordering data

	Article No.
RS 485-IS coupler Isolating transformer for connection of PROFIBUS DP segments with RS 485 and RS 485-iS transmission technologies	**6ES7972-0AC80-0XA0**
Accessories	
PROFIBUS connector with selectable terminating resistor For connection of IM 152 to PROFIBUS DP with RS 485-iS transmission technology	**6ES7972-0DA60-0XA0**

	Article No.
S7-300 rails	
Lengths:	
• 160 mm	**6ES7390-1AB60-0AA0**
• 482 mm	**6ES7390-1AE80-0AA0**
• 530 mm	**6ES7390-1AF30-0AA0**
• 830 mm	**6ES7390-1AJ30-0AA0**
• 2 000 mm	**6ES7390-1BC00-0AA0**
PROFIBUS Fast Connect bus cable Standard type with special design for fast mounting, 2-core, shielded, cut-to-length; max. delivery unit 1 000 m, minimum ordering quantity 20 m	**6XV1830-0EH10**

Design

ET 200iSP modules can also be installed in stainless steel wall enclosures designed to meet more exacting protection requirements. The enclosures are available in various sizes. They comply with degree of protection IP65 and can be used in Ex zones 1 and 21.

Delivery is possible as an empty enclosure (6DL2804-0….) or including components (6DL2804-1…. or 6DL2804-2….), depending on the order. The ET 200iSP components and AirLINE Ex components (see Catalog "Add-ons for SIMATIC PCS 7") envisaged for installation must be ordered separately and delivered to the following address with reference to the enclosure order:

Siemens AG
DF FA SE MF M-SD
Christl Vala
(please insert project name here)
Siemensallee 84
76187 Karlsruhe, Germany

Ordering data

	Article No.
Stainless steel enclosure IP65, protection class Ex e, suitable for Ex zones 1 and 21	
Empty enclosure without installation of modules, for use in gas area (zones 1 and 2), IP65	
Enclosure with hinged cover 650 × 450 × 230 For the installation of max. 15 ET 200iSP modules, for use in gas area, for temperature range -20 … +70 °C, with equipotential bonding rail and cable inlets:	
• 2 × M32 for infeed, 4 × M20 for bus cables, 39 × M16 (3 rows) for signal lines and 2 rows of blanking plugs, all cable inlets of black plastic	**6DL2804-0AD30**
• 2 × M32 for infeed, 4 × M20 for bus cables, 39 × M16 (3 rows) for signal lines, and 2 rows of blanking plugs, all cable inlets of metal, for extended temperature range -40 to +70 °C	**6DL2804-0AD31**
• 2 × M32 for infeed, 4 × M20 for bus cables, 39 × M16 (3 rows) for signal lines and 2 rows of blanking plugs, cable inlets M20 and M16 of blue plastic, M32 of black plastic	**6DL2804-0AD32**
• 2 × M32 for infeed, 4 × M20 for bus cables, 36 × M20 (3 rows) for signal lines and 2 rows of blanking plugs, cable inlets M20 of blue plastic, M32 of black plastic	**6DL2804-0AD42**
• 2 × M32 for infeed, 4 × M20 for bus cables, 65 × M16 (5 rows) for signal lines, all cable inlets of black plastic	**6DL2804-0AD50**
• 2 × M32 for infeed, 4 × M20 for bus cables, 65 × M16 (5 rows) for signal lines, all cable inlets of metal, for extended temperature range -40 … +70 °C	**6DL2804-0AD51**
• 2 × M32 for infeed, 4 × M20 for bus cables, 65 × M16 (5 rows) for signal lines, cable inlets M20 and M16 of blue plastic, M32 of black plastic	**6DL2804-0AD52**
• 2 × M32 for infeed, 4 × M20 for bus cables, 60 × M20 (5 rows) for signal lines, cable inlets M20 of blue plastic, M32 of black plastic	**6DL2804-0AD62**
Enclosure with hinged cover 950 × 450 × 230 For the installation of max. 25 ET 200iSP modules, for use in gas area, for temperature range -20 … +70 °C, with equipotential bonding rail and cable inlets:	
• 2 × M32 for infeed, 4 × M20 for bus cables, 66 × M16 (3 rows) for signal lines and 2 rows of blanking plugs, all cable inlets of black plastic	**6DL2804-0AE30**
• 2 × M32 for infeed, 4 × M20 for bus cables, 66 × M16 (3 rows) for signal lines, and 2 rows of blanking plugs, all cable inlets of metal, for extended temperature range -40 to +70 °C	**6DL2804-0AE31**
• 2 × M32 for infeed, 4 × M20 for bus cables, 66 × M16 (3 rows) for signal lines and 2 rows of blanking plugs, cable inlets M20 and M16 of blue plastic, M32 of black plastic	**6DL2804-0AE32**
• 2 × M32 for infeed, 4 × M20 for bus cables, 57 × M20 (3 rows) for signal lines and 2 rows of blanking plugs, cable inlets M20 of blue plastic, M32 of black plastic	**6DL2804-0AE42**
• 2 × M32 for infeed, 4 × M20 for bus cables, 110 × M16 (5 rows) for signal lines, all cable inlets of black plastic	**6DL2804-0AE50**
• 2 × M32 for infeed, 4 × M20 for bus cables, 110 × M16 (5 rows) for signal lines, all cable inlets of metal, for extended temperature range -40 … +70 °C	**6DL2804-0AE51**

Stainless Steel Wall Enclosure

Ordering data

	Article No.
• 2 × M32 for infeed, 4 × M20 for bus cables, 110 × M16 (5 rows) for signal lines, cable inlets M20 and M16 of blue plastic, M32 of black plastic	6DL2804-0AE52
• 2 × M32 for infeed, 4 × M20 for bus cables, 90 × M20 (5 rows) for signal lines, cable inlets M20 of blue plastic, M32 of black plastic	6DL2804-0AE62
Empty enclosure without installation of modules, for use in dust area (zones 21 and 22), IP65	
Enclosure with hinged cover 650 × 450 × 230 For the installation of max. 15 ET 200iSP modules, for use in dust area, for temperature range -20 … +70 °C, with equipotential bonding rail and cable inlets:	
• 2 × M32 for infeed, 4 × M20 for bus cables, 39 × M16 (3 rows) for signal lines and 2 rows of blanking plugs, all cable inlets of black plastic	6DL2804-0DD30
• 2 × M32 for infeed, 4 × M20 for bus cables, 39 × M16 (3 rows) for signal lines and 2 rows of blanking plugs, cable inlets M20 and M16 of blue plastic, M32 of black plastic	6DL2804-0DD32
• 2 × M32 for infeed, 4 × M20 for bus cables, 36 × M20 (3 rows) for signal lines and 2 rows of blanking plugs, cable inlets M20 of blue plastic, M32 of black plastic	6DL2804-0DD42
• 2 × M32 for infeed, 4 × M20 for bus cables, 65 × M16 (5 rows) for signal lines, all cable inlets of black plastic	6DL2804-0DD50
• 2 × M32 for infeed, 4 × M20 for bus cables, 65 × M16 (5 rows) for signal lines, cable inlets M20 and M16 of blue plastic, M32 of black plastic	6DL2804-0DD52
• 2 × M32 for infeed, 4 × M20 for bus cables, 60 × M20 (5 rows) for signal lines, cable inlets M20 of blue plastic, M32 of black plastic	6DL2804-0DD62

	Article No.
Enclosure with hinged cover 950 × 450 × 230 For the installation of max. 25 ET 200iSP modules, for use in dust area, for temperature range -20 … +70 °C, with equipotential bonding rail and cable inlets:	
• 2 × M32 for infeed, 4 × M20 for bus cables, 66 × M16 (3 rows) for signal lines and 2 rows of blanking plugs, all cable inlets of black plastic	6DL2804-0DE30
• 2 × M32 for infeed, 4 × M20 for bus cables, 66 × M16 (3 rows) for signal lines and 2 rows of blanking plugs, cable inlets M20 and M16 of blue plastic, M32 of black plastic	6DL2804-0DE32
• 2 × M32 for infeed, 4 × M20 for bus cables, 57 × M20 (3 rows) for signal lines and 2 rows of blanking plugs, cable inlets M20 of blue plastic, M32 of black plastic	6DL2804-0DE42
• 2 × M32 for infeed, 4 × M20 for bus cables, 110 × M16 (5 rows) for signal lines, all cable inlets of black plastic	6DL2804-0DE50
• 2 × M32 for infeed, 4 × M20 for bus cables, 110 × M16 (5 rows) for signal lines, cable inlets M20 and M16 of blue plastic, M32 of black plastic	6DL2804-0DE52
• 2 × M32 for infeed, 4 × M20 for bus cables, 95 × M20 (5 rows) for signal lines, cable inlets M20 of blue plastic, M32 of black plastic	6DL2804-0DE62
Empty enclosure without installation of modules, for use in mining (Cat. M2), IP65	
Enclosure with hinged cover 650 × 450 × 230 For the installation of max. 15 ET 200iSP modules, for use in mining (Cat. M2), for temperature range -20 to +70 °C, with equipotential bonding rail and cable inlets:	
• 6 × M25 for infeed, 6 × M32 (1 row) for signal lines, all cable inlets of metal	6DL2804-0MD16
• 6 × M25 for infeed, 12 × M32 (2 rows) for signal lines, all cable inlets of metal	6DL2804-0MD26
Enclosure with hinged cover 950 × 450 × 230 For the installation of max. 25 ET 200iSP modules, for use in mining (Cat. M2), for temperature range -20 to +70 °C, with equipotential bonding rail and cable inlets:	
• 6 × M25 for infeed, 9 × M32 (1 row) for signal lines, all cable inlets of metal	6DL2804-0ME16
• 6 × M25 for infeed, 18 × M32 (2 rows) for signal lines, all cable inlets of metal	6DL2804-0ME26

Ordering data

	Article No.
Enclosure with installation of ET 200iSP modules, for use in gas area (zones 1 and 2), IP65[1)]	
Enclosure with hinged cover 650 × 450 × 230 For installation of max. 15 ET 200iSP modules, for use in gas area, for temperature range -20 … +70 °C, with equipotential bonding rail and cable inlets:	
• 2 × M32 for infeed, 4 × M20 for bus cables, 39 × M16 (3 rows) for signal lines and 2 rows of blanking plugs, all cable inlets of black plastic	**6DL2804-1AD30**
• 2 × M32 for infeed, 4 × M20 for bus cables, 39 × M16 (3 rows) for signal lines, and 2 rows of blanking plugs, all cable inlets of metal, minimum ambient operating temperature -30 °C (heater must be ordered separately)	**6DL2804-1AD31**
• 2 × M32 for infeed, 4 × M20 for bus cables, 39 × M16 (3 rows) for signal lines and 2 rows of blanking plugs, cable inlets M20 and M16 of blue plastic, M32 of black plastic	**6DL2804-1AD32**
• 2 × M32 for infeed, 4 × M20 for bus cables, 36 × M20 (3 rows) for signal lines and 2 rows of blanking plugs, cable inlets M20 of blue plastic, M32 of black plastic	**6DL2804-1AD42**
• 2 × M32 for infeed, 4 × M20 for bus cables, 65 × M16 (5 rows) for signal lines, all cable inlets of black plastic	**6DL2804-1AD50**
• 2 × M32 for infeed, 4 × M20 for bus cables, 65 × M16 (5 rows) for signal lines, all cable inlets of metal, minimum ambient operating temperature -30 °C (heater must be ordered separately)	**6DL2804-1AD51**
• 2 × M32 for infeed, 4 × M20 for bus cables, 65 × M16 (5 rows) for signal lines, cable inlets M20 and M16 of blue plastic, M32 of black plastic	**6DL2804-1AD52**
• 2 × M32 for infeed, 4 × M20 for bus cables, 60 × M20 (5 rows) for signal lines, cable inlets M20 of blue plastic, M32 of black plastic	**6DL2804-1AD62**

	Article No.
Enclosure with hinged cover 950 × 450 × 230 For the installation of max. 25 ET 200iSP modules, for use in gas area, for temperature range -20 … +70 °C, with equipotential bonding rail and cable inlets:	
• 2 × M32 for infeed, 4 × M20 for bus cables, 66 × M16 (3 rows) for signal lines and 2 rows of blanking plugs, all cable inlets of black plastic	**6DL2804-1AE30**
• 2 × M32 for infeed, 4 × M20 for bus cables, 66 × M16 (3 rows) for signal lines, and 2 rows of blanking plugs, all cable inlets of metal, minimum ambient operating temperature -30 °C (heater must be ordered separately)	**6DL2804-1AE31**
• 2 × M32 for infeed, 4 × M20 for bus cables, 66 × M16 (3 rows) for signal lines and 2 rows of blanking plugs, cable inlets M20 and M16 of blue plastic, M32 of black plastic	**6DL2804-1AE32**
• 2 × M32 for infeed, 4 × M20 for bus cables, 57 × M20 (3 rows) for signal lines, and 2 rows of blanking plugs, all cable inlets of metal, minimum ambient operating temperature -30 °C (heater must be ordered separately)	**6DL2804-1AE41**
• 2 × M32 for infeed, 4 × M20 for bus cables, 57 × M20 (3 rows) for signal lines and 2 rows of blanking plugs, cable inlets M20 of blue plastic, M32 of black plastic	**6DL2804-1AE42**
• 2 × M32 for infeed, 4 × M20 for bus cables, 110 × M16 (5 rows) for signal lines, all cable inlets of black plastic	**6DL2804-1AE50**
• 2 × M32 for infeed, 4 × M20 for bus cables, 110 × M16 (5 rows) for signal lines, all cable inlets of metal, minimum ambient operating temperature -30 °C (heater must be ordered separately)	**6DL2804-1AE51**
• 2 × M32 for infeed, 4 × M20 for bus cables, 110 × M16 (5 rows) for signal lines, cable inlets M20 and M16 of blue plastic, M32 of black plastic	**6DL2804-1AE52**
• 2 × M32 for infeed, 4 × M20 for bus cables, 95 × M20 (5 rows) for signal lines, all cable inlets of metal, minimum ambient operating temperature -30 °C (heater must be ordered separately)	**6DL2804-1AE61**
• 2 × M32 for infeed, 4 × M20 for bus cables, 90 × M20 (5 rows) for signal lines, cable inlets M20 of blue plastic, M32 of black plastic	**6DL2804-1AE62**

Ordering data

	Article No.
Enclosure with installation of ET 200iSP modules, for use in dust area (zones 21 and 22), IP65[1)]	
Enclosure with hinged cover 650 × 450 × 230 For the installation of max. 15 ET 200iSP modules, for use in dust area, for temperature range -20 … +70 °C, with equipotential bonding rail and cable inlets:	
• 2 × M32 for infeed, 4 × M20 for bus cables, 39 × M16 (3 rows) for signal lines and 2 rows of blanking plugs, all cable inlets of black plastic	**6DL2804-1DD30**
• 2 × M32 for infeed, 4 × M20 for bus cables, 39 × M16 (3 rows) for signal lines and 2 rows of blanking plugs, cable inlets M20 and M16 of blue plastic, M32 of black plastic	**6DL2804-1DD32**
• 2 × M32 for infeed, 4 × M20 for bus cables, 36 × M20 (3 rows) for signal lines and 2 rows of blanking plugs, cable inlets M20 of blue plastic, M32 of black plastic	**6DL2804-1DD42**
• 2 × M32 for infeed, 4 × M20 for bus cables, 65 × M16 (5 rows) for signal lines, all cable inlets of black plastic	**6DL2804-1DD50**
• 2 × M32 for infeed, 4 × M20 for bus cables, 65 × M16 (5 rows) for signal lines, all cable inlets of metal, minimum ambient operating temperature -30 °C (heater must be ordered separately)	**6DL2804-1DD51**
• 2 × M32 for infeed, 4 × M20 for bus cables, 65 × M16 (5 rows) for signal lines, cable inlets M20 and M16 of blue plastic, M32 of black plastic	**6DL2804-1DD52**
• 2 × M32 for infeed, 4 × M20 for bus cables, 60 × M20 (5 rows) for signal lines, cable inlets M20 of blue plastic, M32 of black plastic	**6DL2804-1DD62**

	Article No.
Enclosure with hinged cover 950 × 450 × 230 For the installation of max. 25 ET 200iSP modules, for use in dust area, for temperature range -20 … +70 °C, with equipotential bonding rail and cable inlets:	
• 2 × M32 for infeed, 4 × M20 for bus cables, 66 × M16 (3 rows) for signal lines and 2 rows of blanking plugs, all cable inlets of black plastic	**6DL2804-1DE30**
• 2 × M32 for infeed, 4 × M20 for bus cables, 66 × M16 (3 rows) for signal lines and 2 rows of blanking plugs, cable inlets M20 and M16 of blue plastic, M32 of black plastic	**6DL2804-1DE32**
• 2 × M32 for infeed, 4 × M20 for bus cables, 57 × M20 (3 rows) for signal lines and 2 rows of blanking plugs, cable inlets M20 of blue plastic, M32 of black plastic	**6DL2804-1DE42**
• 2 × M32 for infeed, 4 × M20 for bus cables, 110 × M16 (5 rows) for signal lines, all cable inlets of black plastic	**6DL2804-1DE50**
• 2 × M32 for infeed, 4 × M20 for bus cables, 110 × M16 (5 rows) for signal lines, cable inlets M20 and M16 of blue plastic, M32 of black plastic	**6DL2804-1DE52**
• 2 × M32 for infeed, 4 × M20 for bus cables, 95 × M20 (5 rows) for signal lines, cable inlets M20 of blue plastic, M32 of black plastic	**6DL2804-1DE62**
Enclosure with installation of ET 200iSP modules, for use in mining (Cat. M2), IP65	
Enclosure with hinged cover 650 × 450 × 230 For the installation of max. 15 ET 200iSP modules, for use in mining (Cat. M2), for temperature range -20 to +70 °C, with equipotential bonding rail and cable inlets:	
• 6 × M25 for infeed, 6 × M32 (1 row) for signal lines, all cable inlets of metal	**6DL2804-1MD16**
• 6 × M25 for infeed, 12 × M32 (2 rows) for signal lines, all cable inlets of metal	**6DL2804-1MD26**
Enclosure with hinged cover 950 × 450 × 230 For the installation of max. 25 ET 200iSP modules, for use in mining (Cat. M2), for temperature range -20 to +70 °C, with equipotential bonding rail and cable inlets:	
• 6 × M25 for infeed, 9 × M32 (1 row) for signal lines, all cable inlets of metal	**6DL2804-1ME16**
• 6 × M25 for infeed, 18 × M32 (2 rows) for signal lines, all cable inlets of metal	**6DL2804-1ME26**

Ordering data

	Article No.
Enclosure with installation of ET 200iSP and AirLINE Ex modules, for use in gaseous area (zones 1 and 2), IP65[2]	
Enclosure with hinged cover 650 × 450 × 230 For the installation of max. 15 ET 200iSP modules, for use in gas area, for temperature range -20 … +70 °C, with equipotential bonding rail and cable inlets:	
• 2 × M32 for infeed, 4 × M20 for bus cables, 39 × M16 (3 rows) for signal lines and 2 rows of blanking plugs, all cable inlets of black plastic	**6DL2804-2AD30**
• 2 × M32 for infeed, 4 × M20 for bus cables, 65 × M16 (5 rows) for signal lines, all cable inlets of black plastic	**6DL2804-2AD50**
• 2 × M32 for infeed, 4 × M20 for bus cables, 60 × M20 (5 rows) for signal lines, cable inlets M20 of blue plastic, M32 of black plastic	**6DL2804-2AD62**
Enclosure with hinged cover 950 × 450 × 230 For the installation of max. 25 ET 200iSP modules, for use in gas area, for temperature range -20 … +70 °C, with equipotential bonding rail and cable inlets:	
• 2 × M32 for infeed, 4 × M20 for bus cables, 66 × M16 (3 rows) for signal lines and 2 rows of blanking plugs, all cable inlets of black plastic	**6DL2804-2AE30**
• 2 × M32 for infeed, 4 × M20 for bus cables, 110 × M16 (5 rows) for signal lines, all cable inlets of black plastic	**6DL2804-2AE50**
• 2 × M32 for infeed, 4 × M20 for bus cables, 95 × M20 (5 rows) for signal lines, cable inlets M20 of blue plastic, M32 of black plastic	**6DL2804-2AE62**

	Article No.
Enclosure with installation of ET 200iSP and AirLINE Ex modules, for use in dusty area (zones 21 and 22), IP65[2]	
Enclosure with hinged cover 650 × 450 × 230 For the installation of max. 15 ET 200iSP modules, for use in dust area, for temperature range -20 to +70 °C, with equipotential bonding rail and cable inlets:	
• 2 × M32 for infeed, 4 × M20 for bus cables, 36 × M20 (3 rows) for signal lines and 2 rows of blanking plugs, all cable inlets of black plastic	**6DL2804-2DD40**
Enclosure with hinged cover 950 × 450 × 230 For installation of max. 25 ET 200iSP modules, for use in dust area, for temperature range -20 … +70 °C, with equipotential bonding rail and cable inlets:	
• 2 × M32 for infeed, 4 × M20 for bus cables, 57 × M20 (3 rows) for signal lines and 2 rows of blanking plugs, all cable inlets of black plastic	**6DL2804-2DE40**
• 2 × M32 for infeed, 4 × M20 for bus cables, 110 × M16 (5 rows) for signal lines, all cable inlets of black plastic	**6DL2804-2DE50**
Special configurations See the section "Options", page 11/77 at the bottom.	

[1] The ET 200iSP components must be ordered separately.

[2] The AirLINE Ex components (see catalog "Add-ons for SIMATIC PCS 7") and the ET 200iSP components must be ordered separately.

Options

Special configurations

For all configurations which deviate from the described standard configurations the order no. **6DL5 711-8AB** must be listed as an additional order number alongside one of the specified basic order numbers.

The following additional information must be appended to the order number:

- Specification/description of the supplementary service and/or
- Reference to an offer

Overview

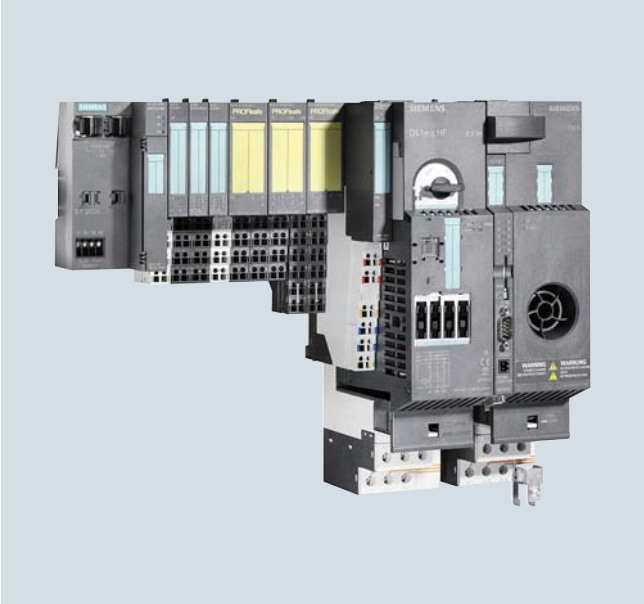

SIMATIC ET 200S with safety-related and standard I/O

The SIMATIC ET 200S is a bit-modular distributed I/O system in IP 20 degree of protection and is approved for operation in Ex zone 2 or 22 (except for operation with motor starters). It is designed with independent wiring that supports the hot swapping of I/O modules (with fire certificate).

The range of I/Os that can be used with SIMATIC PCS 7 includes power modules for electronics modules and motor starters, analog and digital signal modules, and motor starters up to 7.5 kW.

The implementation of safety engineering applications is supported by:

- Safety-related F-components which are integrated in the SIMATIC Safety Integrated System, e.g. terminal, power and electronics modules as well as motor starters
- SIGUARD safety engineering for motor starter applications with conventional safety logic in plants of safety categories 2 to 4 (EN 954-1)

Note:

In addition to the selected modules, all other current ET 200S electronics modules can be used, but with limited functionality. Use of components from the SIPLUS extreme range in extended temperature ranges and under Medial loading on request.

Design

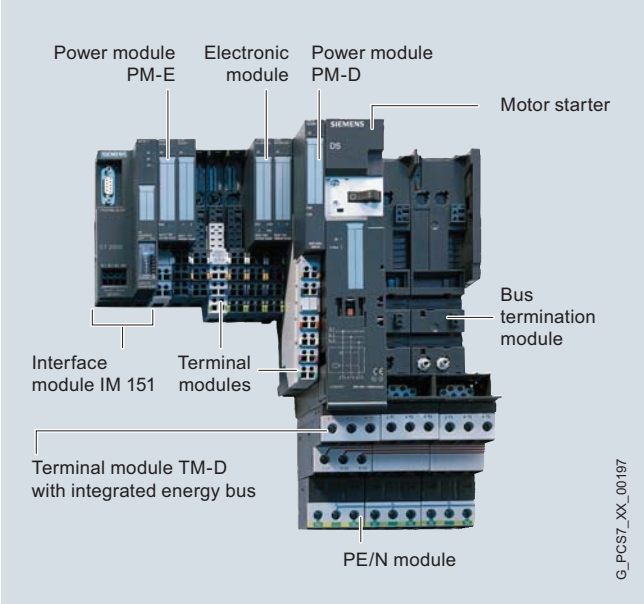

Main components of the ET 200S distributed I/O system:

- **Terminal modules** enable the electrical and mechanical connection of the I/O modules and they house the terminals for the process wiring
  - TM-P terminal modules for power modules
  - TM-E terminal modules for electronics modules
  - TM-DS/TM-RS terminal modules for motor starters and TM-xB expansion modules
- **IM 151 interface module** for connecting the PROFIBUS DP to the ET 200S station. The terminal module is included in the scope of delivery.
- **Power modules** for PM-E electronics modules and PM-D motor starters
  - Individual grouping of load and sensor supply voltages and their monitoring, as well as for the safe shutting down of digital output modules
  - Supplying and monitoring the auxiliary voltages for motor starters, as well as for the shutting down of a complete group of motor starters
- **Electronic modules** for process data acquisition and output (I/O modules)
  - Digital electronics modules for connecting digital sensors and actuators
  - Analog electronics modules for connecting analog sensors and actuators
- **Technology modules**
  - 1 COUNT 24 V/100 kHz counter module
- **Motor starter modules** for switching and protecting any three-phase loads
- **Accessories**
  - Reserve module for reserving a slot for any electronics module
  - Labeling sheets for printing ID labels on a laser printer
  - Shield connection: shield connecting element, shield terminal, ground terminal, copper voltage bus 3 × 10 mm; components for the low-impedance connection of cable shielding with low installation costs

Design (continued)

Assembly

The terminal modules that can be mounted on a DIN rail (35 × 15 × 7.5 or 15 mm) form the carrier system for the I/O modules. They are used for the process wiring and enable the electrical and mechanical connection of the I/O modules. The terminal modules can be prewired and tested without the I/O modules. The I/O modules are simply plugged in place later. Terminal modules are available with screw connections, spring-loaded terminals or FastConnect design for fast mounting.

The automatic coding of the I/O modules reliably prevents the risk of injury to persons and/or destruction of modules through accidental mounting of the wrong module.

Expansion limits

Depending on the IM 151 interface module used, the expansion of an ET 200S station is subject to the following limits:

- A maximum total of 63 I/O modules per station can be inserted between interface module and terminating module
- The maximum permissible width of an ET 200S station is 2 m
- The maximum address volume of all the inserted I/O modules is 244 byte for input data and 244 byte for output data
- The maximum number of parameters is restricted to 244 byte per station

ET 200S configuration

The TIA Selection Tool can be used to assemble an ET 200S station quickly and easily. The tool is familiar with the configuration rules and supports users in the selection of all components and associated accessories in interactive mode.

www.siemens.com/tia-selection-tool

Note:

Please note when working with the TIA Selection Tool that the applications and product range of ET 200S are limited in the context of SIMATIC PCS 7!

Technical specifications

For detailed technical specifications on ET 200S refer to:

- Catalog ST 70, section "IO Systems"
- Industry Mall/CA 01 under "Automation technology - Automation systems - SIMATIC industrial automation systems - IO systems - SIMATIC ET 200 systems for control cabinets" – SIMATIC ET 200S"

Overview

- Terminal modules are mechanical modules for integrating the power and electronics modules, as well as the motor starters and expansion modules (see "Motor starters" section for the order data for the terminal modules for motor starters and expansion modules)
- For constructing the independent wiring using self-assembling voltage buses
- Alternatively with screw-type or spring-loaded terminals and FastConnect design
- Replaceable terminal box
- Automatic coding of the electronics modules
- Self-assembling shielding of the backplane bus for high data security
- Optional plug-in shield connection
- Color coding facility for the terminals and for identifying the slot numbers

Ordering data

	Article No.
TM-P terminal modules for power modules	
TM-P15S23-A1 terminal module 2 × 3 terminals, terminal access to AUX1 bus, AUX1 interconnected to the left, screw-type terminals Ordering unit 1 item	**6ES7193-4CC20-0AA0**
TM-P15C23-A1 terminal module 2 × 3 terminals, terminal access to AUX1 bus, AUX1 interconnected to the left, spring-loaded terminals Ordering unit 1 item	**6ES7193-4CC30-0AA0**
TM-P15N23-A1 terminal module 2 × 3 terminals, terminal access to AUX1 bus, AUX1 interconnected to the left, FastConnect Ordering unit 1 item	**6ES7193-4CC70-0AA0**
TM-P15S23-A0 terminal module 2 × 3 terminals, terminal access to AUX1 bus, AUX1 interrupted to the left, screw-type terminals Ordering unit 1 item	**6ES7193-4CD20-0AA0**
TM-P15C23-A0 terminal module 2 × 3 terminals, terminal access to AUX1 bus, AUX1 interrupted to the left, spring-loaded terminals Ordering unit 1 item	**6ES7193-4CD30-0AA0**
TM-P15N23-A0 terminal module 2 × 3 terminals, terminal access to AUX1 bus, AUX1 interrupted to the left, FastConnect Ordering unit 1 item	**6ES7193-4CD70-0AA0**
TM-P15S22-01 terminal module 2 × 2 terminals, no terminal access to AUX1 bus, AUX1 interconnected to the left, screw-type terminals Ordering unit 1 item	**6ES7193-4CE00-0AA0**
TM-P15C22-01 terminal module 2 × 2 terminals, no terminal access to AUX1 bus, AUX1 interconnected to the left, spring-loaded terminals Ordering unit 1 item	**6ES7193-4CE10-0AA0**
TM-P15N22-01 terminal module 2 × 2 terminals, no terminal access to AUX1 bus, AUX1 interconnected to the left, FastConnect Ordering unit 1 item	**6ES7193-4CE60-0AA0**
TM-P30S44-A0 terminal module 7 × 2 terminals, terminal access on AUX1 rail, AUX1 disconnected to the left, screw terminals for PM-E F PROFIsafe Ordering unit 1 item	**6ES7193-4CK20-0AA0**
TM-P30C44-A0 terminal module 7 × 2 terminals, terminal access on AUX1 rail, AUX1 disconnected to the left, spring-loaded terminals for PM-E F PROFIsafe Ordering unit 1 item	**6ES7193-4CK30-0AA0**

Ordering data

	Article No.
TM-E terminal modules for electronics modules	
TM-E15S24-A1 terminal module 2 × 4 terminals, terminal access to AUX1 bus, AUX1 interconnected to the left, screw-type terminals Ordering unit 5 items	**6ES7193-4CA20-0AA0**
TM-E15C24-A1 terminal module 2 × 4 terminals, terminal access to AUX1 bus, AUX1 interconnected to the left, spring-loaded terminals Ordering unit 5 items	**6ES7193-4CA30-0AA0**
TM-E15N24-A1 terminal module 2 × 4 terminals, terminal access to AUX1 bus, AUX1 interconnected to the left, FastConnect Ordering unit 5 items	**6ES7193-4CA70-0AA0**
TM-E15S24-01 terminal module 2 × 4 terminals, no terminal access to AUX1 bus, AUX1 interconnected to the left, screw-type terminals Ordering unit 5 items	**6ES7193-4CB20-0AA0**
TM-E15C24-01 terminal module 2 × 4 terminals, no terminal access to AUX1 bus, AUX1 interconnected to the left, spring-loaded terminals Ordering unit 5 items	**6ES7193-4CB30-0AA0**
TM-E15N24-01 terminal module 2 × 4 terminals, no terminal access to AUX1 bus, AUX1 interconnected to the left, FastConnect Ordering unit 5 items	**6ES7193-4CB70-0AA0**
TM-E15S23-01 terminal module 2 × 3 terminals, no terminal access to AUX1 bus, AUX1 interconnected to the left, screw-type terminals Ordering unit 5 items	**6ES7193-4CB00-0AA0**
TM-E15C23-01 terminal module 2 × 3 terminals, no terminal access to AUX1 bus, AUX1 interconnected to the left, spring-loaded terminals Ordering unit 5 items	**6ES7193-4CB10-0AA0**
TM-E15N23-01 terminal module 2 × 3 terminals, no terminal access to AUX1 bus, AUX1 interconnected to the left, FastConnect Ordering unit 5 items	**6ES7193-4CB60-0AA0**
TM-E15N26-A1 terminal module 2 × 6 terminals, terminal access to AUX1 bus, AUX1 interconnected to the left, FastConnect Ordering unit 5 items	**6ES7193-4CA80-0AA0**
TM-E15S26-A1 terminal module 2 × 6 terminals, terminal access to AUX1 bus, AUX1 interconnected to the left, screw-type terminals Ordering unit 5 items	**6ES7193-4CA40-0AA0**
TM-E15C26-A1 terminal module 2 × 6 terminals, terminal access to AUX1 bus, AUX1 interconnected to the left, spring-loaded terminals Ordering unit 5 items	**6ES7193-4CA50-0AA0**

	Article No.
TM-E30S44-01 terminal module 4 × 4 terminals, no terminal access to AUX1 bus, AUX1 interconnected to the left, screw-type terminals Ordering unit 1 item	**6ES7193-4CG20-0AA0**
TM-E30C44-01 terminal module 4 × 4 terminals, no terminal access to AUX1 bus, AUX1 interconnected to the left, spring-loaded terminals Ordering unit 1 item	**6ES7193-4CG30-0AA0**
TM-E30S46-A1 terminal module 4 × 6 terminals, terminal access to AUX1 bus, AUX1 interconnected to the left, screw-type terminals Ordering unit 1 item	**6ES7193-4CF40-0AA0**
TM-E30C46-A1 terminal module 4 × 6 terminals, terminal access to AUX1 bus, AUX1 interconnected to the left, spring-loaded terminals Ordering unit 1 item	**6ES7193-4CF50-0AA0**
TM-E15S24-AT terminal module For internal temperature compensation with 2AI TC High Feature, screw-type terminals Ordering unit 1 item	**6ES7193-4CL20-0AA0**
TM-E15C24-AT terminal module For internal temperature compensation with 2AI TC High Feature, spring-loaded terminals Ordering unit 1 item	**6ES7193-4CL30-0AA0**

Accessories for terminal modules see Catalog ST 70 or Industry Mall under "Automation technology – Automation systems – SIMATIC industrial automation systems – IO systems – SIMATIC ET 200 systems for control cabinets – SIMATIC ET 200S"

Overview

- IM 151-1 High Feature (RS 485)
- Interface module for electrical connection of the ET 200S to PROFIBUS DP using copper bus cables
- Handles all data exchange with the PROFIBUS DP master
- Delivery including terminating module

Ordering data

	Article No.
IM151-1 interface module for ET 200S, High Feature	**6ES7151-1BA02-0AB0**

Overview

PM-E power module

- For all types of electronics modules (including safety-related electronics modules); limitations resulting from the supply voltage for PM-E DC 24 V
- For monitoring and – depending on the version – fusing the power supply for electronics modules provided via the TM-P terminal module (load and sensor power supply)
- Diagnostics signals for voltage and blown fuse (can be switched off in the configuration)
- Three versions with different supply voltages:
  - PM-E 24 V DC (not for 2 DI 120 V AC Standard, 2 DI 230 V AC Standard, and 2 DO 24 to 230 V AC)
  - PM-E 24 V DC High Feature with extended status information (not for 2 DI 120 V AC Standard, 2 DI 230 V AC Standard, and 2 DO 24 to 230 V AC)
  - PM-E DC 24 to 48 V; AC 24 to 230 V; with additional fuse

PM-E F power module

- For all non-safety-related types of electronics modules with 24 V DC power supply
- For monitoring the power supply for electronics modules provided via the TM-P terminal module (load and sensor power supply)
- For safe switching off of series-connected digital output modules 24 V DC (up to 10 A; not safety-related) via relay contacts (up to Cat. 3 in accordance with EN 954 or SIL 2 in accordance with IEC 61508);
  released output modules are specified on the Internet at:
  http://support.automation.siemens.com/WW/view/en/39198632
- Design **PM-E F pm DC 24 V PROFIsafe for floating loads** (ground and earth separated); with two additional safety-related digital outputs (switching to high/low, up to SIL 3)
  Diagnostics functions:
  - Channel: short-circuit, overload, wire break, safety-related shutdown
  - Module: overtemperature, internal fault, parameter assignment error, sensor/load voltage missing, communication fault
- Design **PM-E F pp DC 24 V PROFIsafe for non-floating loads** (ground and earth connected), e.g. actuators for connection to a central ground (switching to high/high, up to SIL 3)
  Diagnostics functions:
  - Channel: short-circuit, safety-related shutdown
  - Module: overtemperature, internal fault, parameter assignment error, sensor/load voltage missing, communication fault

Design

Depending on the possible combinations listed in the table, the power modules are plugged onto corresponding TM-P terminal modules. Power modules are suitable for dividing the ET 200S into potential groups. A power module must be plugged in at the beginning of each potential group. In addition, the first module following the IM 151-1 High Feature interface module must always be a power module.

The TM-P terminal module of the power module interrupts the voltage buses (P1/P2) and therefore opens up a new potential group. All sensor and load supplies of the downstream electronics modules are fed from the TM-P and monitored by the power module. The total current of all modules of a potential group is limited by the maximum current carrying capacity of the power module, which is up to 10 A, depending on the voltage and temperature range; for details, refer to the technical specifications of the power modules in the ST 70 Catalog or in the Industry Mall under "Automation technology - Automation systems - SIMATIC industrial automation systems - IO systems - SIMATIC ET 200 systems for control cabinets" – SIMATIC ET 200S".

Possible combinations of the TM-P terminal modules and PM-E power modules

	TM-P terminal modules for power modules			
Screw terminal	**TM-P15S23-A1**	**TM-P15S23-A0**	**TM-P15S22-01**	**TM-P30S44-A0**
6ES7193-...	...4CC20-0AA0	...4CD20-0AA0	...4CE00-0AA0	...4CK20-0AA0
Spring terminal	**TM-P15C23-A1**	**TM-P15C23-A0**	**TM-P15C22-01**	**TM-P30C44-A0**
6ES7193-...	...4CC30-0AA0	...4CD30-0AA0	...4CE10-0AA0	...4CK30-0AA0
FastConnect	**TM-P15N23-A1**	**TM-P15N23-A0**	**TM-P15N22-01**	
6ES7193-...	...4CC70-0AA0	...4CD70-0AA0	...4CE60-0AA0	
Power modules				
PM-E 24 V DC	●	●	●	
PM-E 24 V DC High Feature	●	●	●	
PM-E 24 ... 48 V DC, 24 ... 230 V AC	●	●	●	
PM-E F 24 V DC PROFIsafe				●

Ordering data

	Article No.
PM-E power module for electronics modules	
PM-E power module	
• 24 V DC / 10 A - Monitoring of the load voltage	**6ES7138-4CA01-0AA0**
• 24 V DC/10 A High Feature - Monitoring of the load voltage - Additional status information about voltage and reverse polarity voltage	**6ES7138-4CA60-0AB0**
• 24 ... 48 V DC; 24 ... 230 V AC - Monitoring of the fuse - Monitoring of the load voltage	**6ES7138-4CB11-0AB0**
PM-E F power module	
• PM-E F pm DC 24 V PROFIsafe - 1 × relay 24 V DC/10 A, switching to high/low, for switching off series-connected standard digital output modules (up to SIL 3) - 2 × 24 V DC/2 A, switching to high/low - Safe monitoring of communication with PROFIsafe - Channel-specific diagnostics: short-circuit, overload, wire break, safety-related shutdown - Module diagnostics: overtemperature, internal fault, parameter assignment error, sensor/load voltage missing, communication fault	**6ES7138-4CF03-0AB0**
• PM-E F pp DC 24 V PROFIsafe - 1 × relay 24 V DC/10 A, switching to high/high, for switching off series-connected standard digital output modules (up to SIL 3) - Safe monitoring of communication with PROFIsafe - Channel-specific diagnostics: short-circuit, safety-related shutdown - Module diagnostics: overtemperature, internal fault, parameter assignment error, sensor/load voltage missing, communication fault	**6ES7138-4CF42-0AB0**

Overview

- 2, 4 and 8-channel digital inputs and outputs for the ET 200S
- Can be plugged onto TM-E terminal modules with automatic coding.
- High-feature versions for enhanced plant availability, additional functions and comprehensive diagnostics
- Hot swapping of modules possible
- Safety-related digital input module 4/8 F-DI PROFIsafe
- Safety-related digital output module 4 F-DO PROFIsafe 24 V DC/2 A
- Isolated from the backplane bus

Design

Possible combinations of the TM-E terminal modules and digital modules

	TM-E terminal modules for electronic modules						
Screw terminal Order No. 6ES7193-…	**TM-E15S26-A1** …4CA40-0AA0	**TM-E15S24-A1** …4CA20-0AA0	**TM-E15S24-01** …4CB20-0AA0	**TM-E15S23-01** …4CB00-0AA0	**TM-E15S24-AT** …4CL20-0AA0	**TM-E30S44-01** …4CG20-0AA0	**TM-E30S46-A1** …4CF40-0AA0
Spring terminal Order No. 6ES7193-…	**TM-E15C26-A1** …4CA50-0AA0	**TM-E15C24-A1** …4CA30-0AA0	**TM-E15C24-01** …4CB30-0AA0	**TM-E15C23-01** …4CB10-0AA0	**TM-E15C24-AT** …4CL30-0AA0	**TM-E30C44-01** …4CG30-0AA0	**TM-E30C46-A1** …4CF50-0AA0
Fast Connect Order No. 6ES7193-…	**TM-E15N26-A1** …4CA80-0AA0	**TM-E15N24-A1** …4CA70-0AA0	**TM-E15N24-01** …4CB70-0AA0	**TM-E15N23-01** …4CB60-0AA0	-	-	-
Electronics modules							
2 DI 24 V DC Standard 2 DI 24 V DC High Feature 4 DI 24 V DC Standard 4 DI 24 V DC High Feature	●	●	●	●			
4 DI 24 … 48 V AC/DC High Feature	●	●	●	●			
4 DI NAMUR	●	●	●	●			
8 DI 24 V DC Standard	●	●	●	●			
2 DI 120 V AC Standard	●	●	●	●			
2 DI 230 V AC Standard	●	●	●	●			
2 DO 24 V DC/0.5 A Standard 2 DO 24 V DC/0.5 A High Feature 4 DO 24 V DC/0.5 A Standard 4 DO 24 V DC/0.5 A High Feature	●	●	●	●			
8 DO 24 V DC/0.5 A Standard 8 DO 24 V DC/0.5 A High Feature	●		●				
2 DO 24 V DC/2 A Standard 2 DO 24 V DC/2 A High Feature 4 DO 24 V DC/2 A Standard 4 DO 24 V DC/2 A High Feature	●	●	●	●			
2 DO 24 … 230 V AC/2 A	●	●	●	●			
2 RO, 24 … 120 V DC/5 A, 24 … 230 V AC/5 A 2 RO, 24 … 48 V DC/5 A, 24 … 230 V AC/5 A	●	●	●	●			
4/8 failsafe DI 24 V DC[1]						●	●
4 failsafe DO 24 V DC/2 A[1]						●	●
Reserve (width 15 mm)	●	●	●	●	●		
Reserve (width 30 mm)						●	●

[1] See Manual "ET 200S Failsafe Modules" in the documentation packages "S7 F Systems" and "S7 Distributed Safety"

Ordering data

	Article No.
Digital inputs for floating contacts	
DI 2 × 24 V DC, Standard Ordering unit 5 items	**6ES7131-4BB01-0AA0**
DI 4 × 24 V DC, Standard Ordering unit 5 items	**6ES7131-4BD01-0AA0**
DI 2 × 24 V DC, High Feature; with diagnostics • Short-circuit monitoring Ordering unit 5 items	**6ES7131-4BB01-0AB0**
DI 4 × 24 V DC, High Feature; with diagnostics • Short-circuit monitoring Ordering unit 5 items	**6ES7131-4BD01-0AB0**
DI 4 × 24 ... 48 V AC/DC, High Feature; with configurable diagnostics • Wire break monitoring (external resistance circuit required) • Monitoring of the fuse • Monitoring of the load voltage Ordering unit 5 items	**6ES7131-4CD02-0AB0**
DI 4 × 24 V DC, NAMUR, with diagnostics • Adjustable diagnostics interrupt Ordering unit 1 item	**6ES7131-4RD02-0AB0**
DI 8 × 24 V DC, High Speed Ordering unit 1 item	**6ES7131-4BF00-0AA0**
DI 2 × 120 V AC, Standard Ordering unit 5 items	**6ES7131-4EB00-0AB0**
DI 2 × 230 V AC, Standard Ordering unit 5 items	**6ES7131-4FB00-0AB0**
Safety-related digital input	
4/8 F-DI 24 V DC PROFIsafe 8 DI safety-related SIL 2 (1oo1) or 4 DI safety-related SIL 3 (1oo2), with diagnostics • Cyclic short-circuit test • Discrepancy monitoring of 2 channels for SIL 3 (adjustable discrepancy time) • Safe monitoring of communication with PROFIsafe Ordering unit 1 item	**6ES7138-4FA05-0AB0**

	Article No.
Digital outputs for DC voltage (suitable for solenoid valves, DC contactors, indicator lights, etc.)	
DO 2 × 24 V DC/0.5 A, Standard Ordering unit 5 items	**6ES7132-4BB01-0AA0**
DO 2 × 24 V DC/2 A, Standard Ordering unit 5 items	**6ES7132-4BB31-0AA0**
DO 2 × 24 V DC/0.5 A, High Feature, with diagnostics • Connection of a default value per channel in the event of CPU failure (configurable) • Short-circuit monitoring by channel • Broken wire monitoring by channel (when "1" signal) Ordering unit 5 items	**6ES7132-4BB01-0AB0**
DO 2 × 24 V DC/2 A, High Feature, with diagnostics • Connection of a default value per channel in the event of CPU failure (configurable) • Short-circuit monitoring by channel • Broken wire monitoring by channel (when "1" signal) Ordering unit 5 items	**6ES7132-4BB31-0AB0**
DO 4 × 24 V DC/0.5 A, Standard Ordering unit 5 items	**6ES7132-4BD02-0AA0**
DO 4 × 24 V DC/0.5 A, High Feature • Diagnostics: Short-circuit Ordering unit 5 items	**6ES7132-4BD00-0AB0**
DO 8 × 24 V DC/0.5 A, Standard Ordering unit 1 item	**6ES7132-4BF00-0AA0**
DO 8 × 24 V DC/0.5 A, High Feature • Connection of a default value per channel in the event of CPU failure (configurable) • Diagnostics: Short-circuit Ordering unit 1 item	**6ES7132-4BF00-0AB0**
DO 4 × 24 V DC/2 A, Standard Ordering unit 5 items	**6ES7132-4BD32-0AA0**
DO 4 × 24 V DC/2 A, High Feature • Diagnostics: Short-circuit Ordering unit 5 items	**6ES7132-4BD30-0AB0**

Ordering data

	Article No.
Digital output for AC voltage (suitable for solenoid valves, AC contactors, indicator lights, etc.)	
DO 2 × 24...230 V AC, 2 A • Connection of a default value per channel in the event of CPU failure (configurable) Ordering unit 5 items	**6ES7132-4FB01-0AB0**
Relay output (suitable for solenoid valves, contactors, motor starters, miniature motors and indicator lights)	
2 × RO, NO contact 24 ... 120 V DC/5 A 24 ... 230 V AC/5 A • Connection of a default value per channel in the event of CPU failure (configurable) Ordering unit 5 items	**6ES7132-4HB01-0AB0**
2 × RO, changeover contact 24 … 48 V DC/5 A 24 … 230 V AC/5 A • Connection of a default value per channel in the event of CPU failure (configurable) Ordering unit 5 items	**6ES7132-4HB12-0AB0**

	Article No.
Safety-related digital output	
4 F-DO 24 V DC/2 A PROFIsafe Safety-related up to SIL 3, with diagnostics, switching to low/high • Channel-specific diagnostics: short-circuit, overload, wire break (with "1" signal), safety-related shutdown • Module diagnostics: overtemperature, internal fault, parameterization error, sensor/load voltage missing, communication fault • Safe monitoring of communication with PROFIsafe Ordering unit 1 item	**6ES7138-4FB04-0AB0**
Accessories	
Reserve modules for ET 200S for reserving unused slots for any electronics module	
• 15 mm wide (Ordering unit 5 items)	**6ES7138-4AA01-0AA0**
• 30 mm wide (Ordering unit 1 item)	**6ES7138-4AA11-0AA0**
Further accessories, e.g. for inscription	see Catalog ST 70 or Industry Mall under "Automation technology – Automation systems – SIMATIC industrial automation systems – IO systems – SIMATIC ET 200 systems for control cabinets – SIMATIC ET 200S"

Overview

- Analog inputs and outputs for the ET 200S
- Can be plugged onto TM-E terminal modules with automatic coding.
- High-feature variants with enhanced accuracy and resolution
- Hot swapping of modules possible

Design

Possible combinations of the TM-E terminal modules and analog modules

	TM-E terminal modules for electronic modules				
Screw terminal Order number 6ES7 193…	**TM-E15S26-A1** …4CA40-0AA0	**TM-E15S24-A1** …4CA20-0AA0	**TM-E15S24-01** …4CB20-0AA0	**TM-E15S23-01** …4CB00-0AA0	**TM-E15S24-AT** …4CL20-0AA0
Spring terminal Order number 6ES7 193…	**TM-E15C26-A1** …4CA50-0AA0	**TM-E15C24-A1** …4CA30-0AA0	**TM-E15C24-01** …4CB30-0AA0	**TM-E15C23-01** …4CB10-0AA0	**TM-E15C24-AT** …4CL30-0AA0
Fast Connect Order number 6ES7 193…	**TM-E15N26-A1** …4CA80-0AA0	**TM-E15N24-A1** …4CA70-0AA0	**TM-E15N24-01** …4CB70-0AA0	**TM-E15N23-01** …4CB60-0AA0	--
Electronic modules					
2AI U Standard 2AI U High Feature	●	●	●	●	
2AI I 2WIRE Standard	●	●	●	●	
2AI I 2/4WIRE High Feature	●		●		
2 AI I 4WIRE Standard	●		●		
2AI RTD Standard	●		●		
2AI RTD High Feature	●	●	●	●	
2 AI TC Standard	●	●	●	●	
2 AI TC High Feature					●
2AO U Standard 2AO U High Feature	●		●		
2 AO I Standard 2AO I High Feature	●	●	●	●	
Reserve (width 15 mm)	●	●	●	●	●

Ordering data

	Article No.
Analog input	
• AI 2 x U (± 5 V, 1 ... 5 V, ± 10 V) / 13 bits, standard - Diagnostics inside module - Overflow/underflow diagnostics	**6ES7134-4FB01-0AB0**
• AI 2 x I, 2-wire transmitter (4 ... 20 mA), 13 bits, standard - Diagnostics inside module - Overflow/underflow diagnostics - Wire break monitoring	**6ES7134-4GB01-0AB0**
• AI 2 x I, 4-wire transmitter (±20 mA, 4 ... 20 mA), 13 bits, standard - Diagnostics inside module - Overflow/underflow diagnostics - Wire break monitoring	**6ES7134-4GB11-0AB0**
• AI 2 × TC standard for thermocouple or voltage measurement - Resolution 15 bit + sign - Temperature measurement with thermocouple type E, N, J, K, L, S, R, B, T - Voltage measurement ± 80 mV - Module diagnostics: Overflow/underflow, internal faults, parameterization errors - Wire break monitoring per channel for measurement with thermocouple - Compensation through external Pt100 in the same station with AI 2/4 × RTD standard - Extended temperature range 0 … 50 °C with vertical installation	**6ES7134-4JB01-0AB0**
• AI 2/4 × RTD standard for resistance thermometer or resistance measurement - 2 inputs (3-wire and 4-wire connection)/4 inputs (2-wire connection) - Max. resolution 15 bits + sign - Resistance thermometer Pt100, Ni100 - Module diagnostics: Overflow/underflow, internal faults, parameterization errors - Wire break monitoring per channel	**6ES7134-4JB51-0AB0**
• AI 2 × U (1 … 5 V, ±5 V, ±10 V), 15 bits, High Feature - Diagnostics inside module - Overflow/underflow diagnostics	**6ES7134-4LB02-0AB0**
• AI 2 × I, 2/4-wire transmitter (±20 mA, 4 … 20 mA), 15 bits, High Feature - Diagnostics inside module - Overflow/underflow diagnostics - Wire break monitoring	**6ES7134-4MB02-0AB0**
• AI 2 × TC, 15 bits, High Feature - Diagnostics inside module - Overflow/underflow diagnostics - Wire break monitoring - Internal temperature compensation with TM-E15S24-AT or TM-E15C24-AT terminal module	**6ES7134-4NB01-0AB0**
• AI 2 × RTD, 15 bits, High Feature - Diagnostics inside module - Overflow/underflow diagnostics - Wire break monitoring - Resistance thermometer Pt100/200/500/1 000, Ni100/1 000 (2, 3 or 4 wires) - Temperature in Celsius or Fahrenheit	**6ES7134-4NB51-0AB0**

	Article No.
Analog output	
• AO 2 × U (1 … 5 V, 12 bits, ±10 V, 13 bits), standard - Diagnostics inside module - Connection of substitute value in event of CPU stop (parameterizable) - Short-circuit monitoring	**6ES7135-4FB01-0AB0**
• AO 2 × I (±20 mA, 4 … 20 mA), 13 bits, standard - Diagnostics inside module - Connection of substitute value in event of CPU stop (parameterizable) - Wire break monitoring	**6ES7135-4GB01-0AB0**
• AO 2 × U (1 … 5 V, ±10 V), 15 bits, High Feature - Diagnostics inside module - Connection of substitute value in event of CPU stop (parameterizable) - Short-circuit monitoring	**6ES7135-4LB02-0AB0**
• AO 2 × I (±20 mA, 4 … 20 mA), 15 bits, High Feature - Diagnostics inside module - Connection of substitute value in event of CPU stop (parameterizable) - Wire break monitoring	**6ES7135-4MB02-0AB0**
Accessories	
Reserve module for ET 200S for reserving unused slots for any electronics module • 15 mm wide (5 units)	**6ES7138-4AA01-0AA0**
For additional accessories, such as labeling sheets, see Catalog ST 70 or Industry Mall under "Automation technology – Automation systems – SIMATIC industrial automation systems – IO systems – SIMATIC ET 200 systems for control cabinets – SIMATIC ET 200S".	

Overview

1 COUNT 24 V/100 kHz counter module

- Single-channel, intelligent 32 bit counter module for universal counting and time-based measuring tasks (frequency, speed and period measurements)
- For direct connection of 24 V DC incremental encoders or initiators
- Comparison functions with definable comparison values
- Integrated digital output for output of the response on reaching the comparison value
- Can be plugged onto TM-E terminal modules with automatic coding
- Hot swapping of modules possible
- Simple parameterization without additional software

Design

Possible combinations of the TM-E terminal modules and technology modules

	TM-E terminal modules for electronic modules	
Screw terminal	**TM-E15S26-A1**	**TM-E15S24-01**
Order number 6ES7 193…	…4CA40-0AA0	…4CB20-0AA0
Spring terminal	**TM-E15C26-A1**	**TM-E15C24-01**
Order number 6ES7 193…	…4CA50-0AA0	…4CB30-0AA0
Fast Connect	**TM-E15N26-A1**	**TM-E15N24-01**
Order number 6ES7 193…	…4CA80-0AA0	…4CB70-0AA0
Technology modules		
1 COUNT 24 V/100 kHz	●	●

Function

1 COUNT 24 V/100 kHz counter module

- 1 channel for counting up and down; counting range ± 31 bits
- Counting frequency up to 100 kHz
- 6 different operating modes:
  - Continuous counting
  - Single counting
  - Periodic count
  - Frequency measurement
  - Speed measurement
  - Period measurement
- Gate control via level at digital input (HW gate) as well as software control (SW gate)
- 1-, 2- or 4-fold evaluation
- Response on reaching a comparison value or on exceeding a range
- Loading of counter with defined starting value
- Once-only or periodic synchronization
- Latch function: saving of current counter values through setting of digital input
- Parameterizable response in case of CPU failure: abort, continue, connection of substitute value, holding of last value

Ordering data

	Article No.
1 COUNT 24 V/100 kHz counter module For universal counting and measuring tasks with ET 200S	**6ES7138-4DA04-0AB0**
Accessories	
For SIMODRIVE sensor incremental encoders, signal cables, shield connection clamps and supports as well as additional accessories, such as labeling sheets, see Catalog ST 70 or the Industry Mall under "Automation technology – Automation systems – SIMATIC industrial automation systems – IO systems – SIMATIC ET 200 systems for control cabinets – SIMATIC ET 200S".	

Overview

- Completely factory-wired motor starters for switching and protecting any three-phase loads
- High Feature motor starter with a combination comprising starter circuit-breaker, solid-state overload protection and contactor or soft starter up to 7.5 kW
- Safety-related motor starters based on the High Feature motor starters (direct-on-line and reversing starters) with integral redundancy function for shutdown reliability up to Category 4 (EN 954-1)
- With self-assembling 50 A power bus, i.e. the load current is only supplied once for a group of motor starters
- Hot swapping is permissible
- Inputs and outputs for activating and signaling the states have been integrated
- Diagnostics capability for active monitoring of the switching and protection functions
- Can be combined with brake control module for controlling electromechanical brakes in three-phase motors

Design

Power modules and motor starters are operated on the terminal modules which are assigned to them in the tables in the sections "High Feature motor starters" and "Safety-related motor starters". The terminal modules form a carrier system which is simultaneously used for the power supply to the motor starters (electronics: 24 V DC and load: 400 V AC).

24 V DC for the electronics is provided by the power module inserted to the left of the first motor starter. The power module and the downstream motor starters constitute a potential group whose scope is limited by the current carrying capacity of the power module. When this limit is reached, a new potential group must be established with a further power module.

The load current is applied to the first (left) TM-xxxxS32 motor starter terminal module, and reaches the other motor starters via the power bus of the adjacent TM-xxxxS31 terminal modules. The power bus is designed for loads up to 50 A. When this limit is reached, a new load group must be started with a further TM-xxxxS32 terminal module, and provided with load current.

Brake control modules for motor starters

High Feature and safety-related motor starters can be expanded by a brake control module for controlling electromechanical brakes in three-phase motors. The following modules are available:

- For brakes with external supply 24 V DC/4 A:
  - xB3 (with two optional inputs for special functions)
  - xB1
- For brakes with internal supply 500 V DC/0.7 A:
  - xB4 (with two optional inputs for special functions)
  - xB2

The externally supplied 24 V DC brakes can be released independently of the switching status of the motor starter. The 500 V DC brakes, on the other hand, are generally supplied directly from the junction plate of the motor via a rectifier module and cannot be released if the motor starter is switched off. These brakes cannot be used in conjunction with the DSS1e-x motor starter (direct soft starter).

The outputs of the brake control modules can also be used for other purposes e.g. for controlling DC valves. Autonomous special functions can be implemented with the help of two optional inputs each on a brake control module xB3 or xB4 and a control module 2DI of the High Feature motor starter. These operate independently of the bus and higher-level control, e.g. to implement rapid stop functions for slide controls.

Brake control modules are operated on different terminal modules depending on the design:

Brake control module	Terminal modules for Brake Control Module	
xB1 or xB2	**TM-xB15S24-01** 3RK1903-0AG00	--
xB3 or xB4	--	**TM-xB215S24-01** 3RK1903-0AG01

High Feature motor starters

The High Feature motor starters are used together with the PM-D power module. Combined with a terminal module according to the table, a PM-D power module opens up a new potential group. The scope of the group is limited in that the value specified for the current carrying capacity of the power module (10 A for PM-D) must not be exceeded by the aggregate current of all modules in a potential group.

The PM-D handles the following tasks for the motor starters of a potential group:

- Supply of voltages for the electronics via the voltage buses of the terminal modules
- Monitoring of voltages for the electronics and contactors

Design (continued)

	Terminal modules for motor starters and power modules		
With power bus supply for one load group, including 3 caps for termination of power bus	**TM-DS65-S32** 3RK1903-0AK00	**TM-RS130-S32** 3RK1903-0AL00	--
With power bus bushing	**TM-DS65-S31** 3RK1903-0AK10	**TM-RS130-S31** 3RK1903-0AL10	--
with screw-type terminals	--	--	**TM-P15-S27-01** 3RK1903-0AA00
Power module			
PM-D 24 V DC			●
Motor starters			
DSS1e-x High Feature direct soft starter	●		
RS1e-x High Feature reversing starter		●	

Safety-related motor starters

In EMERGENCY STOP applications, safety-related motor starters can be shut down selectively by means of the upstream PM-D F PROFIsafe power module. Up to 6 shutdown groups can be formed per power module. The PM-D F PROFIsafe obtains the shutdown signal from the F/FH automation system via the interface module of the ET 200S.

Combined with a terminal module according to the table, a PM-D F PROFIsafe power module opens up a new potential group. The scope of the group is limited in that the total current of all modules in a potential group must not exceed the current carrying capacity of the power module (with PM-D F PROFIsafe: inrush current 10 A; continuous current 5 A).

	Terminal modules for motor starters, power modules and supplementary/expansion modules		
With power bus supply for one load group, including 3 caps for termination of power bus	**TM-FD65-S32** 3RK1903-3AC00	**TM-FRS130-S32** 3RK1903-3AD00	--
With power bus bushing	**TM-FD65-S31** 3RK1903-3AC10	**TM-FRS130-S31** 3RK1903-3AD10	--
with screw-type terminals	--	--	**TM-PF30S47-F0** 3RK1903-3AA00
Power module			
PM-D F PROFIsafe			●
Motor starters			
F-DS1e-x High Feature direct starter	●		
F-RS1e-x High Feature reversing starter		●	

Supplementary/expansion modules for safety-related motor starter applications

The PM-D F X1 power/expansion module permits selective shutdown of 1 to 6 shutdown groups through external safety devices (e.g. safety relay or AS-i safety monitor). The PM-D F X1 uses the safety-related shutdown signals connected to the module to trigger the downstream failsafe motor starters which then safely switch off the assigned motors.

In addition, external safety devices can also be powered by a safe 24 V DC voltage V_1 via the safety-related PM-D F X1 power/expansion module.

The F-CM contact multiplier equipped with four safe floating contacts (NO contacts) can be used together with the PM-D F PROFIsafe or the PM-D F X1 as an interface to plants with conventional safety engineering. It has internal diagnostics functions and can be set to one of 6 shutdown groups.

	Terminal modules for supplementary/expansion modules	
Without supply from left (as power module)	**TM-PFX30 S47-G1** 3RK1903-3AE00	--
With supply from left (for expansion)	**TM-PFX30 S47-G0** 3RK1903-3AE10	--
	--	**TM-FCM30-S47** 3RK1903-3AB10
Additional/expansion modules		
PM-D F X1 safety-related power/expansion module	●	
F-CM safety-related contact multiplier		●

Ordering data

	Article No.
High Feature motor starters With diagnostics, expandable with brake control module	
DSS1e-x soft starters Electronic switching, electronic overload protection	
• Up to 1.1 kW/400 V; 0.3 ... 3.0 A	**3RK1301-0AB20-0AB4**
RS1e-x reversing starter Mechanical switching, electronic overload protection	
• Up to 3.0 kW/400 V; 2.4 ... 8.0 A	**3RK1301-0BB10-1AA4**
Accessories	
Terminal modules for motor starters	
• TM-DS65-S32 for DS1e-x, DSS1e-x direct starters with supply connection for power bus, incl. 3 caps for terminating the power bus	**3RK1903-0AK00**
• TM-DS65-S31 for DS1e-x, DSS1e-x direct starters without supply connection for power bus	**3RK1903-0AK10**
• TM-RS130-S32 for RS1e-x reversing starter with supply connection for power bus, incl. 3 caps for connecting the power bus	**3RK1903-0AL00**
• TM-RS130-S31 for RS1e-x reversing starter without supply connection for power bus	**3RK1903-0AL10**
PM-D power module for direct and reversing starters; 24 V DC, with diagnostics	**3RK1903-0BA00**
Terminal module for PM-D power module TM-P15-S27-01	**3RK1903-0AA00**

	Article No.
Jumper modules	
• M15-PEN Terminal block PE/N, for jumpering a gap in the PE/N bus, 15 mm wide	**3RK1903-0AH00**
• M30-PEN Terminal block PE/N, for jumpering a gap in the PE/N bus, 30 mm wide	**3RK1903-0AJ00**
• M15-L123 Terminal block L1/L2/L3, for jumpering a gap in the power bus, 15 mm wide	**3RK1903-0AE00**
• M30-L123 Terminal block L1/L2/L3, for jumpering a gap in the power bus, 30 mm wide	**3RK1903-0AF00**
Control modules	
• Control module 2DI COM DC 24 V Digital input module with two inputs for parameterizable motor starters, for mounting on front of motor starter, with PC connection (LOGO! PC cable 6ED1057-1AA00-0AB0 required)	**3RK1903-0CH10**
• Control module 2DI LC COM DC 24 V Like control module 2DI COM, plus input for switching to manual local mode	**3RK1903-0CH20**
M65-PEN-F infeed module 65 mm wide, incl. two caps, in combination with TM-DS65-32/ TM-RS130-S32	**3RK1903-2AC00**
M65-PEN-S connection module 65 mm wide, in combination with TM-DS65-31 / TM-RS130-S31	**3RK1903-2AC10**
Brake control expansion module For motors with mechanical brake	
• **xB1** 24 V DC / 4 A	**3RK1903-0CB00**
• **xB2** 500 V DC / 0.7 A	**3RK1903-0CC00**
• **xB3** 24 V DC / 4 A, DI 2 x 24 V DC with two optional inputs	**3RK1903-0CE00**
• **xB4** 500 V DC / 0.7 A, DI 2 x 24 V DC with two optional inputs	**3RK1903-0CF00**
Terminal modules for brake control expansion module	
• TM-xB15S24-01 for xB1 or xB2	**3RK1903-0AG00**
• TM-xB215S24-01 for xB3 or xB4	**3RK1903-0AG01**

Ordering data	Article No.
Safety-related motor starters With diagnostics, expandable with brake control module	
F-DS1e-x safety-related direct starter Mechanical switching, electronic overload protection	
• Up to 1.1 kW/400 V; 0.3 ... 3.0 A	**3RK1301-0AB13-0AA4**
• Up to 3.0 kW/400 V; 2.4 ... 8.0 A	**3RK1301-0BB13-0AA4**
• Up to 7.5 kW/400 V; 2.4 ... 16.0 A	**3RK1301-0CB13-0AA4**
F-RS1e-x safety-related reversing starter Mechanical switching, electronic overload protection	
• Up to 1.1 kW/400 V; 0.3 ... 3.0 A	**3RK1301-0AB13-1AA4**
• Up to 3.0 kW/400 V; 2.4 ... 8.0 A	**3RK1301-0BB13-1AA4**
• Up to 7.5 kW/400 V; 2.4 ... 16.0 A	**3RK1301-0CB13-1AA4**
Accessories	
Terminal modules for safety-related motor starters	
• For F-DS1e-x direct starter, with coding	
- **TM-FDS65-S32** with supply connection for power bus	**3RK1903-3AC00**
- **TM-FDS65-S31** without supply connection for power bus	**3RK1903-3AC10**
• For F-RS1e-x reversing starter, with coding	
- **TM-FRS130-S32** with supply connection for power bus	**3RK1903-3AD00**
- **TM-FRS130-S31** without supply connection for power bus	**3RK1903-3AD10**
PM-D F PROFIsafe power module for direct and reversing starters; 24 V DC, with diagnostics	**3RK1903-3BA02**
Terminal module for PM-D F PROFIsafe power module TM PF30 S47-F0	**3RK1903-3AA00**
Jumper modules and control modules See under High Feature motor starters	
M65-PEN-F infeed module 65 mm wide, incl. two caps, in combination with TM-DS65-32 / TM-RS130-S32	**3RK1903-2AC00**
M65-PEN-S connection module 65 mm wide, in combination with TM-DS65-31 / TM-RS130-S31	**3RK1903-2AC10**

	Article No.
Brake control expansion module For motors with mechanical brake	
• **xB3** 24 V DC / 4 A, DI 2 x 24 V DC with two optional inputs	**3RK1903-0CE00**
• **xB4** 500 V DC / 0.7 A, DI 2 x 24 V DC with two optional inputs	**3RK1903-0CF00**
Terminal modules for brake control expansion module TM-xB215S24-01 for xB3 or xB4	**3RK1903-0AG01**
PM-D F X1 power module For power supply of emergency stop signals of external safety units; for 6 switch-off groups, 24 V DC	**3RK1903-3DA00**
Terminal module for PM-D F X1 power module	
• **TM-PFX30 S47-G0** with infeed on left	**3RK1903-3AE10**
• **TM-PFX30 S47-G1** without infeed on left	**3RK1903-3AE00**
F-CM contact multiplexer With 4 safe floating contacts	**3RK1903-3CA00**
Terminal module for F-CM contact multiplexer TM-FCM30 S47-F01	**3RK1903-3AB10**

Note:

Color coding labels and additional accessories for ET 200S configurations with High Feature motor starters as well as for ET 200S configurations with safety-related motor starters, see Catalog ST 70 or Industry Mall under "Automation technology – Automation systems – SIMATIC industrial automation systems – IO systems – SIMATIC ET 200 systems for control cabinets – SIMATIC ET 200S".

Overview

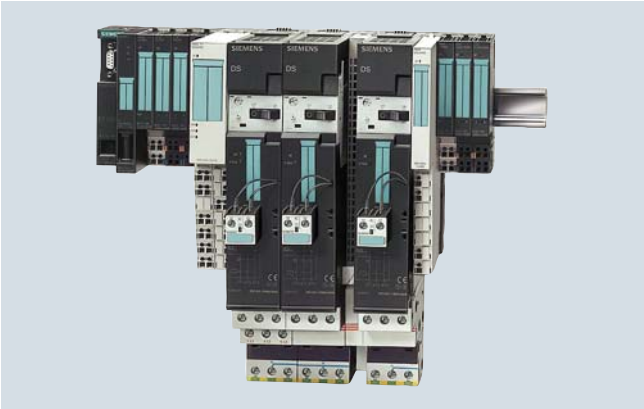

The SIGUARD safety system based on the PM-D F1, F2, F3, F4, F5 and PM-X safety modules can be combined with ET 200S motor starters to enable local safety applications up to category 4 in accordance with EN 954-1, independent of the safety-related control carried out by the PLC. The costs involved in the configuration and wiring of conventional safety systems are no longer incurred.

The safety sensors are directly connected to the safety modules. Instead of the safety relays which are otherwise essential, the safety modules available with functions for evaluating emergency stop circuits, for monitoring protective doors or for implementation of time-delayed shut-downs safely switch off downstream motor starters. In addition, they monitor their auxiliary voltages.

Application

The following ET 200S motor starters can be combined with the safety modules of the SIGUARD safety system:

- Standard motor starter (see Catalog ST 70) with additive failsafe kit 1 or 2
- High Feature motor starters

This results in versatile options for use. Several safety circuits can be designed without problem. Typical application examples are presented in the manual "SIMATIC ET 200S motor starters".

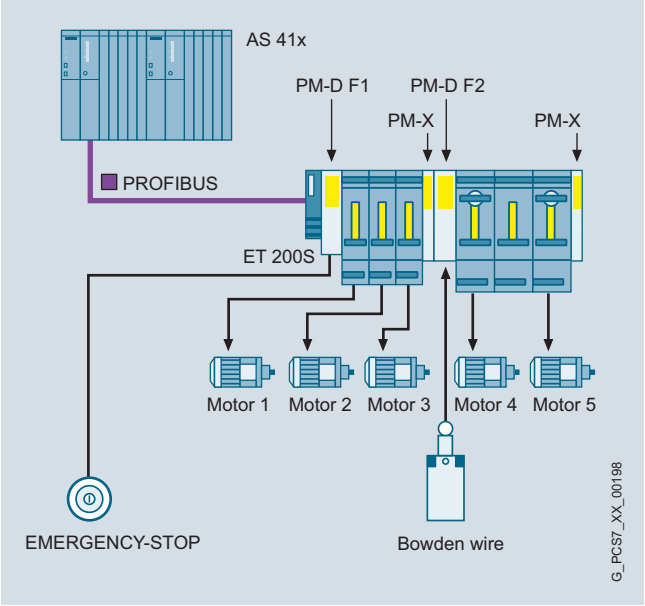

Example of safety application with 2 safety circuits (switch-off groups)

Design

Components required in relation to safety requirement

Components required	Safety category acc. to EN 954-1		
	2	3	4
PM-D F1...5	●	●	●[1]
TM-PF30 S47-..	●	●	●
F kit 1/2	●[2]	●[2]	●[2]
PM-X	●	●	●
TM-X15 S27-01	●	●	●
Redundantly switching, external infeed contactor		●	●

[1] PM-D F3 power module only approved up to Category 3

[2] F kit required for Standard motor starter only; already integrated into High Feature motor starter

Possible combinations of safety and terminal modules

	PM-D F1	PM-D F2	PM-D F3	PM-D F4	PM-D F5	PM-X
TM-PF30 S47-B1[3]	●	●				
TM-PF30 S47-B0[4]	●	●				
TM-PF30 S47-C1[5]			●	●		
TM-PF30 S47-C0[6]			●	●		
TM-PF30 S47-D0					●	
TM-X15 S27-01						●

[3] For F1 or F2 in higher-level or individual safety group (potential group)

[4] For F1 or F2 in lower-level cascaded safety group (partial potential group)

[5] For expansion with F3 or F4 in separate ET 200S station (potential group)

[6] For expansion with F3 or F4 in the same ET 200S station (partial potential group)

Design (continued)

Safety modules PM-D F1/F2/F3/F4/F5

In the case of safety applications with SIGUARD systems, the following safety modules are used individually or combined instead of the PM-D standard power module:

- PM-D F1 for evaluating emergency stop circuits with the function "Monitored start"
- PM-D F2 for monitoring of protective doors with the function "Automatic start"
- PM-D F3 as expansion for PM-D F1/F2 for time-delayed tripping
- PM-D F4 for expanding safety circuits with other ET 200S motor starters, e.g. in a different tier (station)
- PM-D F5 for transmitting the status of PM-D F1...4 over four floating relay circuits to external safety devices (contact multipliers)

These serve as safety relays for downstream ET 200S motor starters.

The PM-D F1 and PM-D F2 safety modules can be combined with the PM-D F3 or PM-D F4 modules. A PM-D F5 can be arranged in any position between a PM-D F1...4 and a PM-X.

Every safety circuit starting with a PM-D F1 ... 4 must be terminated by a PM-X. An additional PM-D power module is not required.

The PM-D F1 ... F4 safety modules monitor the auxiliary voltages U_1 and U_2. A voltage failure is communicated in the form of a diagnostics message via bus.

Failsafe kit

Every standard motor starter in a safety segment has to be supplemented by the failsafe kit (F-kit) in order to monitor the switching function. F-Kit 1 supplements the DS1-x direct-on-line starter, F-Kit 2 the RS1-x reversing starter.

The F-kits comprise:

- Contact carriers for the terminal modules
- 1 or 2 auxiliary switch blocks for the contactor(s) of the motor starter
- Connecting lines

High Feature motor starters and their terminal modules come equipped with the F-Kit functions.

TM-PF30 terminal modules for PM-D F1 ... F5 safety modules

The TM-PF30 terminal modules are used to accommodate the PM-D F1 ... F5 safety modules (see table for possible combinations). Depending on the version, they are suitable for:

- Supply of 24 V DC for the electronics (U_1) and the contactors of the motor starters (U_2)
- Sensor connection: connection of 2-channel sensor circuit (e.g. emergency stop button) and a reset button
- Design of separate safety circuits
- Cascading of safety circuits

Summary of product range with important differences in features:

- TM-PF30 S47-B1
  - Carrier for PM-D F1 or PM-D F2 safety module
  - Creates a safety circuit
  - Supply of U_1 and U_2
  - Sensor connection
- TM-PF30 S47-B0
  - Carrier for PM-D F1 or PM-D F2 safety module
  - Creates a subordinate (cascaded) safety circuit
  - No separate supply of U_1 and U_2; (U_1 and U_2 are present on the voltage buses)
  - Sensor connection
- TM-PF30 S47-C1
  - Carrier for PM-D F3 or PM-D F4 safety module
  - Creates the expansion of a safety circuit in a new station
  - Supply of U_1 and U_2
  - Control input IN+/IN-
  - No sensor connection
- TM-PF30 S47-C0
  - Carrier for PM-D F3 or PM-D F4 safety module
  - Creates a subordinate (cascaded) safety circuit
  - Separate supply of U_2 (U_1 is present on the voltage buses)
  - No sensor connection
- TM-PF30 S47-D0
  - Carrier for PM-D F5 safety module
  - Arrangement between a TM-PF30 S47-B0, B1, C0 or C1 and a TM-X
  - No sensor connection

TM-X terminal module for PM-X safety module

The TM-X 15 S27-01 terminal module (TM-X) is a carrier for the PM-X safety module. It must be positioned on the right next to the last motor starter of a safety circuit.

The TM-X is suitable for connecting an external supply contactor (second switch-off possibility). It has terminals for connecting the contactor coil and the feedback contact.

Ordering data

	Article No.
SIGUARD safety modules	
PM-D F1 Safety module with diagnostics; for emergency stop applications with the function "Monitored start"; 2-channel	**3RK1903-1BA00**
PM-D F2 Safety module with diagnostics; for protective door monitoring with the function "Automatic start"; 2-channel	**3RK1903-1BB00**
PM-D F3 Safety module with diagnostics; for expansion of PM-D F1/2 for an additional potential group; time delay 0 to 15 s	**3RK1903-1BD00**
PM-D F4 Safety module with diagnostics; for expansion of PM-D F1/2 for an additional potential group	**3RK1903-1BC00**
PM-D F5 Expansion to PM-D F1 up to PM-D F4, contact multiplier	**3RK1903-1BE00**
Accessories	
PM-X Safety module with diagnostics; for connecting a safety group and for connecting an external incoming-feeder contactor or for connecting an external safety circuit	**3RK1903-1CB00**
F-Kit 1 Failsafe kit for DS1-x standard motor starter (not necessary for High Feature motor starter)	**3RK1903-1CA00**
F-Kit 2 Failsafe kit for RS1-x standard motor starter (not necessary for High Feature motor starter)	**3RK1903-1CA01**

	Article No.
SIGUARD terminal modules	
TM-PF30 S47-B1 terminal module For PM-D F1/2 safety modules; with incoming supply U1/U2 and sensor connection	**3RK1903-1AA00**
TM-PF30 S47-B0 terminal module For PM-D F1/2 safety modules; with sensor connection	**3RK1903-1AA10**
TM-PF30 S47-C1 terminal module For PM-D F3/4 safety modules; with incoming supply U1/U2 and control input IN+/IN-	**3RK1903-1AC00**
TM-PF30 S47-C0 terminal module For PM-D F3/4 safety modules; with incoming supply U2	**3RK1903-1AC10**
TM-PF30 S47-D0 terminal module For PM-D F5 safety module	**3RK1903-1AD10**
TM-X15 S27-01 terminal module For PM-X safety module	**3RK1903-1AB00**

Overview

SIMATIC ET 200SP is a highly flexible and scalable I/O system with IP20 protection which can communicate with SIMATIC PCS 7 automation systems (controllers) via PROFINET IO. Designed for installation in enclosures or control cabinets, it convinces with a particularly compact design, exceptional usability, and impressive performance.

The comprehensive, channel-specific and easy-to-program diagnostics with plain text messages means that faults can be located and eliminated in an extremely short time.

Summary of main features

- Remote I/O stations with IP20 protection, can be networked via PROFINET IO
- Free selection of PROFINET connection system and hardware using BusAdapter (BA 2×RJ45, BA 2×FC, BA 2×SCRJ, BA SCRJ/RJ45 or BA SCRJ/FC)
- System redundancy S2: ET 200SP station can establish communication to each of the two CPUs of an AS redundancy station via an interface module
- Up to 64 I/O modules (digital/analog); full data volume up to 1 440 bytes (with S2 system redundancy to 1 000 bytes)
- Compact, rugged, and easy-to-service design with permanent wiring:
  - Shielded backplane bus, designed as module rack using BaseUnits
  - Push-in terminals for quick, one-handed wiring without the use of tools
  - Excellent accessibility of terminals arranged in rows
  - I/O module and terminal box can be replaced during operation (hot swapping)
  - Automatic coding of the I/O modules prevents destruction of the electronics due to faulty equipping
  - Simple retrofitting of modules at the station end without reconfiguration
  - Unambiguous inscription and color concept helps avoid faults
  - Consistent shielding of conductor via terminal box and backplane bus to the PROFINET cable
  - Low space requirement allows high packing density in the control cabinet
- Significant system functions
  - Self-assembling potential groups without external wiring or jumpers
  - Individual load groups can be formed without extra power modules
  - Partial commissioning: Tolerating of gaps in the design through reservation of slots for further configuration
  - Electronic rating plate (I&M data 0...3)
  - Extensive diagnostics, channel-specific

Design

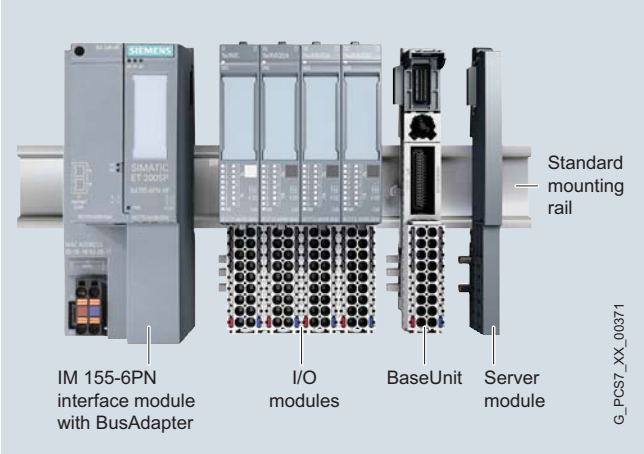

ET 200SP for SIMATIC PCS 7, design

Main components of the SIMATIC ET 200SP distributed I/O system

- Interface module IM 155-6PN High Feature with BusAdapter (separate component for establishing the connection system) for communication with the SIMATIC PCS 7 automation system (controller) via PROFINET IO
- I/O modules
  4, 8 or 16 digital channels (DI, DQ, RQ) and 2 or 4 analog channels (AI, AQ); up to 64 I/O modules can be plugged into passive BaseUnits in any combination
- BaseUnits
  Supports for the plug-in I/O modules and the terminal box; for construction of the backplane bus and for the mechanical/electrical connections
- Server module
  for connection of ET 200SP station
- Standard mounting rail
  for latching-in of interface module, BaseUnits and server module; for installation of ET 200SP station in control cabinet

The extremely compact design allows a high packing density. With a depth of approx. 75 mm, the overall height is e.g.:

- 117 mm with 16 channels and 1-wire connection (without AUX terminals)
- 141 mm with 8 channels and 3-wire connection and AUX terminals

Replaceable bus adapters enable free selection of the PROFINET connection system from the following versions:

- BA 2×RJ45: 2 electrical connections for bus cable with standard RJ45 connectors (Cu)
- BA 2×FC: 2 electrical connections for direct connection of FastConnect bus cable (Cu; full-surface shielded connection, increased mechanical strength)
- BA 2×SCRJ: 2 optical connections for fiber-optic cables with SC RJ connectors (POF, PCF, increased mechanical strength)
- BA SCRJ/RJ45: 1 optical connection (port 1) for fiber-optic cables with SC RJ connector (POF, PCF, increased mechanical strength) and 1 electrical connection (port 2) for bus cable with standard RJ45 connector (Cu)
- BA SCRJ/FC: 1 optical connection (port 1) for fiber-optic cables with SC RJ connector (POF, PCF, increased mechanical strength) and 1 electrical connection (port 2) for direct connection of FastConnect bus cable (Cu; full-surface shielded connection, increased mechanical strength)

The BaseUnits mounted on a standard rail can already be wired and tested prior to connection of the I/O modules (permanent wiring).

Hot swapping of the I/O modules and terminal boxes plugged onto the BaseUnits is possible. Mechanical coding prevents the use of an incorrect slot and the resulting destruction of the module electronics.

A BU cover is available for reserved, unequipped slots (BaseUnit without I/O module) as protection for the BaseUnit connectors. It can be provided with a reference ID label.

For the connection of cable shields that is both space-saving as well as optimized in terms of EMC, a shield connection is available that is quick and easy to mount. This consists of a shield connection element that can be plugged onto the BaseUnit and a shield terminal.

An inscription and color identification system with the following components facilitates orientation:

- Labeling strips for insertion in interface and I/O modules (foil on rolls for thermal transfer printers or pre-perforated A4 size paper for laser printers)
- Color-coded labels for cable assignment and identification of the potentials of an I/O module
- Reference identification labels for interface module, BusAdapter, BaseUnits and I/O modules for identifying system components

Installation

Installation of an ET 200SP station is quick and easy:

- Latching-in of interface module, BaseUnits and server module on a standard mounting rail (35 x 15 x 7.5 mm or 35 x 15 x 15 mm)
- Connection of the cables for the 24 V DC power supply on the interface module
- Plugging-on and screwing tight of the bus adapter
- Prewiring of the 24 V DC power supply and process signal cables on the BaseUnits
- Plugging-on of the I/O modules

The ET 200SP station can be installed in any orientation in an enclosure or control cabinet. The preferred position is horizontal.

Configuration limits and guidelines

- Up to 64 I/O modules (digital/analog); full data volume up to 1 440 bytes (with S2 system redundancy to 1 000 bytes)
- The thermal continuous current for the load or encoder supply can be a maximum of 10 A per potential group.

Technical specifications

Selected technical specifications of the ET 200SP in the context of SIMATIC PCS 7:

Design	
Degree of protection	IP20
Design	Discretely scalable
Installation	DIN rail (standard mounting rail)
Connection system for sensors/actuators	Single-conductor or multi-conductor connection; push-in terminals
Power supply	
Rated voltage	24 V DC; tolerance range: 19.2 ... 28.8 V DC (static); 18.5 ... 30.2 V DC (dynamic)
Relevant properties	
Safety engineering	No
For use in hazardous areas	Zones 2, 22
Increased availability	No (can be operated on the redundant automation system using system redundancy S2)
Temperature range • Horizontal installation • Vertical installation	 0 … +60 °C[1)] 0 ... +50 °C[1)]
Resistance to vibration	Up to 1 g with BA 2×RJ45; up to 5 g with BA 2×FC
Communication	
PROFIBUS (Cu/FO)	No/No
PROFINET (Cu/FO)	Yes/Yes
System functions	
Permanent wiring	Yes
Hot swapping	Yes
Expansion/configuration during ongoing operation	No
Diagnostics (module-dependent)	Channel-discrete

Functions	
Digital channels	Yes
Analog channels	Yes
HART	Yes
Motor starters	No
Pneumatic interface	No
Technological functions	No
Approvals, standards	
• CE for industrial applications	According to 94/9/EC, 2004/108/EC and 2006/95/EC
• Interference emission	EN 61000-6-4:2007
• Noise immunity	EN 61000-6-2:2005
• ATEX in accordance with EN 60079-15 and EN 60079-0	II 3 G Ex nA IIC Tx Gc DEKRA 12ATEX0038X
• IECEx in accordance with EN 60079-15 and EN 60079-0	Ex nA IIC Tx Gc IECEx DEK 13.0011X
• AS/NZS for Australia and New Zealand	AS/NZS CISPR 16
• cULus in accordance with UL 508, CSA C22.2 No. 142 and No. 213, ANSI/ISA 12.12.01	Class I, Division 2, Groups A, B, C, D, Tx Class I, Zone 2, Group IIC Tx
• PROFIBUS	IEC 61784-1:2010 Ed3 CP 3/1
• IEC	IEC 61131-2
• CE	According to 94/9/EC, 2004/108/EC and 2006/95/EC
• KCC	Korean Certification KCC-REM-S49-ET200SP
• Shipbuilding approval	Classification companies • ABS (American Bureau of Shipping) • BV (Bureau Veritas) • DNV (Det Norske Veritas) • GL (Germanischer Lloyd) • LRS (Lloyds Register of Shipping) • Class NK (Nippon Kaiji Kyokai)

[1)] Also available in SIPLUS version for extended temperature range (-40 ... +70 °C) and corrosive atmosphere/condensation (for details, see www.siemens.com/siplus and Catalog ST 70).

For detailed technical specifications, especially on individual components such as interface modules, BaseUnits or I/O modules, see:

- Catalog ST 70, section "IO Systems"
- Industry Mall under "Automation technology - Automation systems - SIMATIC industrial automation systems - IO systems - SIMATIC ET 200 systems for control cabinets" – SIMATIC ET 200iSP"
- SIMATIC ET 200SP Manual Collection: https://support.industry.siemens.com/cs/ww/de/view/84133942

More information

General information

www.siemens.com/et200sp

TIA Selection Tool

Note:

When working with the TIA Selection Tool in the context of SIMATIC PCS 7, please note the specified limitations for the ET 200SP in the "SIMATIC ET 200SP for SIMATIC PCS 7" section with regard to area of application and product range.

www.siemens.com/tia-selection-tool

Brochures

Information material for downloading can be found on the Internet:

www.siemens.com/simatic/printmaterial

Overview

IM 155-6PN High Feature interface module, with reference ID label

IM 155-6PN HF (High Feature) interface module

- Interface module for linking the ET 200SP station to PROFINET IO
- 24 V DC supply for interface module and backplane bus
- Integrated 2-port switch for line configuration
- Handling of complete data transfer with the controller
- Data exchange with the I/O modules via the backplane bus
- Support of identification data I&M0 to I&M4
- Delivery including server module
- BusAdapter with integrated 2-port switch for individual selection of the PROFINET IO connection system can be ordered separately

BusAdapter BA 2×RJ45

BusAdapter (BA)

A BusAdapter can be used to adapt the universal PROFINET IO interface of the interface module to the specific requirements of the environment of use. If a connection socket is faulty or when changing the connection system at a later stage, it is only necessary to replace the BusAdapter.

The following bus adapters are available:

- **BA 2×RJ45**
  With two sockets for commercially available RJ45 plugs; suitable for standard applications with moderate mechanical strength and EMI resistance
- **BA 2×FC**
  With two FastConnect terminals for direct connection of the bus cables; suitable for applications with higher mechanical strength and/or EMI resistance (5x higher resistance against vibrations and EMI)
- **BA 2×SCRJ**
  With two optical PROFINET interfaces for connection of optical-fiber cables via SC RJ connectors (5x higher resistance against vibrations and EMI; PROFINET cable lengths between two stations up to 300 m)
- **BA SCRJ/RJ45**
  With two PROFINET interfaces:
  - 1 × optical, for connection of fiber-optic cables via SC RJ connectors (port 1)
  - 1 × electric, for connection of bus cable with standard RJ45 connectors (port 2)
- **BA SCRJ/FC**
  With two PROFINET interfaces (5x higher resistance against vibrations and EMI):
  - 1 × optical, for connection of fiber-optic cables via SC RJ connectors (port 1)
  - 1 × electric, for direct placement of the FastConnect bus cable (port 2)

Design

The IM 155-6PN High Feature interface module is snapped directly onto the standard mounting rail.

Device features:

- Diagnostics displays for errors (ERROR), Maintenance (MAINT), operation (RUN) and power supply (PWR) as well as one link LED per port
- Optional inscription with labeling strips (light gray), available as:
  - Roll for thermal transfer continuous feed printer with 500 strips each
  - Paper sheets for laser printer, A4 format, with 100 strips each
- Optional equipping with a reference ID label

The selected bus adapter is simply plugged onto the interface module and secured with a screw. It can be equipped with a reference ID label.

Ordering data	Article No.
IM 155-6PN High Feature interface module Including server module, without BusAdapter	**6ES7155-6AU00-0CN0**
Accessories	
BusAdapter BA 2×RJ45 2 × RJ45 connection for PROFINET	**6ES7193-6AR00-0AA0**
BusAdapter BA 2×FC 2 × FastConnect (FC) connector for PROFINET	**6ES7193-6AF00-0AA0**
BusAdapter BA 2×SCRJ 2 × SCRJ FO connection for PROFINET	**6ES7193-6AP00-0AA0**
BusAdapter BA SCRJ/RJ45 With Media converter FOC-Cu; 1 × SCRJ FO and 1 × RJ45 connector for PROFINET	**6ES7193-6AP20-0AA0**
BusAdapter BA SCRJ/FC With Media converter FOC-Cu; 1 × SCRJ FO and 1 × FastConnect connection for PROFINET	**6ES7193-6AP40-0AA0**
Reference ID labels 10 sheets of 16 labels	**6ES7193-6LF30-0AW0**
Labeling strips	
• 500 labeling strips on roll, light gray	**6ES7193-6LR10-0AA0**
• 1 000 labeling strips, A4 format, light gray	**6ES7193-6LA10-0AA0**
DIN rail 35 mm	
• Length: 483 mm for 19" cabinets	**6ES5710-8MA11**
• Length: 530 mm for 600 mm cabinets	**6ES5710-8MA21**
• Length: 830 mm for 900 mm cabinets	**6ES5710-8MA31**
• Length 2 m	**6ES5710-8MA41**
Spare parts	
Server module (spare part)	**6ES7193-6PA00-0AA0**
Power supply connector interface module (spare part) For 24 V DC supply	
• with push-in terminals (10 units)	**6ES7193-4JB00-0AA0**
• with screw-type terminals (10 units)	**6ES7193-4JB50-0AA0**

Overview

BaseUnits

- Type A0 BaseUnits with 16 process terminals
  - Terminal box light
  - Terminal box light, with 10 additional AUX terminals (internally jumpered)
  - Terminal box dark
  - Terminal box dark, with 10 additional AUX terminals (internally jumpered)
- Type A1 BaseUnits for analog modules for temperature detection with 16 process terminals
  - Terminal box light
  - Terminal box light, with 2 × 5 internally jumpered add-on terminals
  - Terminal box dark
  - Terminal box dark, with 2 × 5 internally jumpered add-on terminals
- Type B0 BaseUnit for digital output module with relays, terminal box dark; 12 process terminals and 4 internally jumpered AUX terminals

I/O modules

- Digital I/O modules
  - Digital input modules, 8 or 16 channels
  - Digital output modules, 4, 8 or 16 channels, including relay module
- Analog I/O modules
  - Analog input modules, 2 or 4-channel
  - Analog output modules, 2 or 4-channel

Supplementary material

- BU cover
- Labeling strips
- Reference ID labels
- Color-coding labels
- Shield connection

Design

ET 200SP BaseUnit

BaseUnits

The I/O modules are plugged into BaseUnits (BU). BaseUnit versions suitable for this are those which correspond to the BU type (A0/A1/B0/D0) of the selected I/O module.

The BaseUnits provide electrical and mechanical connections between the I/O modules. To this end, the BaseUnits are mounted on a standard rail and latched into each other from the side.

The module slot also has a position for a coding element. This automatically codes the I/O module type when it is inserted for the first time, and prevents any different type of module from being inserted.

Each BaseUnit has a replaceable terminal box. In addition to the process terminals, this has two terminals (L+ and M) for the 24 V DC supply for the I/O modules and sensors. The plug-in terminals are designed to be space-saving and easy to fit.

BaseUnits are available with light or dark terminal boxes. BaseUnits with a light terminal block (light BUs) separate the self-assembling voltage buses (P1, P2, and AUX) from the adjacent module on the left and thus open up a new load group. The 24 V DC supply for the I/O modules and sensors of this load group (max. thermal continuous load 10 A) is connected to P1 (+) and P2 (-) via the terminals at the bottom with red and blue spring NC contacts.

BaseUnits with dark terminal box (dark BUs) are connected onto the right of a light BU. Contrary to the light BUs, they link the voltage buses P1, P2 and AUX to the adjacent module on the left and thus extend the voltage group. A new power supply is therefore only necessary at the next light BU.

Certain BaseUnits additionally have internally jumpered AUX terminals. Potentials of up to 24 V DC or protective earth (PE) conductors can be connected to the AUX rails.

The BaseUnits of type A1 which can be connected to analog modules for temperature detection enable recording of the terminal temperature using an integrated sensor for automatic temperature compensation for thermocouples. These BaseUnits are also available with 2 × 5 add-on terminals (internally jumpered).

Design (continued)

Supplementary material for I/O modules and BaseUnits

BU cover

Unequipped BaseUnit slots reserved for later use can be protected by a BU cover. A 15 or 20 mm wide BU cover must be selected depending on the type of BaseUnit. It can be provided with a reference ID label.

Labeling strips

Appropriate light gray labeling strips for insertion in I/O modules are available in two different materials:

- Roll for thermal transfer roll printer with 500 labeling strips each
- Paper sheets for laser printer, A4 format, with 100 labeling strips each

Reference ID labels

The reference ID labels delivered as a package comprising 10 sheets with 16 strips each are used to identify bus adapters and BaseUnits as well as interface and I/O modules. The labels suitable for printing with commercially available thermal transfer printers are easy to insert into the corresponding module.

Color-coding labels

To prevent wiring faults, the potentials at the terminals of the BaseUnits can be coded using color-coded labels. The color-coded labels are simply attached to the terminal box. The following versions are available:

- Module-specific color-coded labels for process terminals. Selection is made depending on the color code (CCxx) printed on the front of the I/O module. The color code CC00 means that a color-coded label is not available for the process terminals of this I/O module.
- Color-coded labels for the 10 AUX terminals of BaseUnit type A0 in red, blue, and yellow/green.
- Color-coded labels for the 2 × 5 add-on terminals of the BaseUnit type A1 in red/blue.
- Color-coded labels for the 4 AUX terminals of BaseUnits type B0 in red, blue, and yellow/green.

Shield connection

A shield connection that is quick and easy to mount, comprising a shield connection element (can be plugged into the BaseUnit) and a shield terminal, permit the connection of cable shields that is both space-saving as well as optimized in terms of EMC. The shielded cable is fixed to the shield connecting element by means of the shield terminal. The low-impedance connection to the functional ground (standard mounting rail) does not require any additional wiring by the user.

The shield connection is supplied as a package containing 5 shield connection elements and 5 shield terminals.

Ordering data

Refer to the I/O modules for Ordering data of the BaseUnits, from page 11/105

Overview

ET 200SP I/O module

- Can be plugged into type A0 BaseUnits (BU) with automatic coding
- LED display for error, operation, power, and status
- Clear labeling on front of module
  - Plain text identification of the module type and function class
  - 2D matrix code (article and serial number)
  - Connection diagram
  - Hardware and firmware version
  - Color code CC for module-specific color coding of the potentials at the BU terminals
  - Complete Article No.
- Optional labeling accessories
  - Labeling strips
  - Reference identification label
- Optional module-specific color identification of the terminals according to the color code CC

Design

Digital input modules

- 8 or 16 channels
- Color coding of the module type DI: White
- Usable types:
  - DI 8x24 V DC Standard for BU type A0, color code CC01
  - DI 8x24 V DC High Feature for BU type A0, color code CC01
  - DI 16x24 V DC Standard for BU type A0, color code CC00
  - DI 8x24 V DC NAMUR High Feature for BU type A0, color code CC01

Digital output modules

- 4, 8 or 16 channels
- Color coding of module types DQ and RQ: Black
- Usable types:
  - DQ 4x24VDC/ 2A Standard for BU type A0, color code CC02
  - DQ 8x24 V DC / 0.5A Standard for BU type A0, color code CC02
  - DQ 8x24 V DC / 0.5A High Feature for BU type A0, color code CC02
  - DQ 16x24 V DC / 0.5A Standard for BU type A0, color code CC00
  - RQ NO 4x120 V DC - 230 V AC / 5A Standard, BU type B0, color code CC00

Ordering data

	Article No.
Digital input modules	
Digital input modules	
• DI 8x24 V DC Standard, BU type A0, color code CC01	**6ES7131-6BF00-0BA0**
• DI 16x24 V DC Standard, BU type A0, color code CC00	**6ES7131-6BH00-0BA0**
• DI 8x24 V DC High Feature, BU type A0, color code CC01	**6ES7131-6BF00-0CA0**
• DI 8x24 V DC NAMUR High Feature, for BU type A0, color code CC01	**6ES7131-6TF00-0CA0**
Usable BaseUnits	
BU15-P16+A0+2D BU type A0; BaseUnit (light), 15 mm wide, with 16 process terminals to the module; for starting a new load group (max. 10 A)	**6ES7193-6BP00-0DA0**
BU15-P16+A0+2B BU type A0; BaseUnit (dark), 15 mm wide, with 16 process terminals to the module; for continuing the load group	**6ES7193-6BP00-0BA0**
BU15-P16+A10+2D BU type A0; BaseUnit (light), 15 mm wide, with 16 process terminals (1...16) to the module and an additional 10 internally jumpered AUX terminals (1A to 10 A); for starting a new load group (max. 10 A)	**6ES7193-6BP20-0DA0**
BU15-P16+A10+2B BU type A0; BaseUnit (dark), 15 mm wide, with 16 process terminals (1...16) to the module and an additional 10 internally jumpered AUX terminals (1A to 10 A); for continuing the load group	**6ES7193-6BP20-0BA0**
Accessories	
Reference ID labels 10 sheets with 16 strips each	**6ES7193-6LF30-0AW0**
Labeling strips	
• 500 labeling strips on roll, light gray	**6ES7193-6LR10-0AA0**
• 1 000 labeling strips on paper sheet in A4 format, light gray	**6ES7193-6LA10-0AA0**
BU cover For covering empty slots (gaps), 5 units	
• 15 mm wide	**6ES7133-6CV15-1AM0**
• 20 mm wide	**6ES7133-6CV20-1AM0**
Shield connection Pack with 5 shield supports and 5 shield terminals	**6ES7193-6SC00-1AM0**
Color-coded labels, 15 mm wide	
• Color code CC01, module-specific, for 16 push-in terminals; for BaseUnit types A0, A1; 10 units	**6ES7193-6CP01-2MA0**
• Color code CC71, for 10 AUX terminals 1A to 10A, yellow/green; for BU type A0 with push-in terminals; 10 units	**6ES7193-6CP71-2AA0**
• Color code CC72, for 10 AUX terminals 1A to 10A, red; for BU type A0 with push-in terminals; 10 units	**6ES7193-6CP72-2AA0**
• Color code CC73, for 10 AUX terminals 1A to 10A, blue; for BU type A0 with push-in terminals; 10 units	**6ES7193-6CP73-2AA0**

Ordering data

Digital output modules

	Article No.
Digital output modules	
• DQ 4x24VDC/2A Standard, BU type A0, color code CC02	**6ES7132-6BD20-0BA0**
• DQ 8x24VDC/0.5A Standard, BU type A0, color code CC02	**6ES7132-6BF00-0BA0**
• DQ 8x24 V DC/0.5 A High Feature, BU type A0, color code CC02	**6ES7132-6BF00-0CA0**
• DQ 16x24 V DC/0.5 A Standard, BU type A0, color code CC00	**6ES7132-6BH00-0BA0**
• Relay module RQ NO 4x120 V DC - 230 V AC/5A Standard, normally-open, BU type B0, color code CC00	**6ES7132-6HD00-0BB0**
Usable BaseUnits	
BU15-P16+A0+2D BU type A0; BaseUnit (light), 15 mm wide, with 16 process terminals to the module; for starting a new load group (max. 10 A)	**6ES7193-6BP00-0DA0**
BU15-P16+A0+2B BU type A0; BaseUnit (dark), 15 mm wide, with 16 process terminals to the module; for continuing the load group	**6ES7193-6BP00-0BA0**
BU15-P16+A10+2D BU type A0; BaseUnit (light), 15 mm wide, with 16 process terminals (1...16) to the module and an additional 10 internally jumpered AUX terminals (1A to 10 A); for starting a new load group (max. 10 A)	**6ES7193-6BP20-0DA0**
BU15-P16+A10+2B BU type A0; BaseUnit (dark), 15 mm wide, with 16 process terminals (1...16) to the module and an additional 10 internally jumpered AUX terminals (1A to 10 A); for continuing the load group	**6ES7193-6BP20-0BA0**
BU20-P12+A4+0B BU type B0; BaseUnit (dark), 20 mm wide, with 12 process terminals (1...12) to the module and an additional 4 internally jumpered AUX terminals (1A to 4A); for continuing the load group	**6ES7193-6BP20-0BB0**

	Article No.
Accessories	
Reference ID labels 10 sheets with 16 strips each	**6ES7193-6LF30-0AW0**
Labeling strips	
• 500 labeling strips on roll, light gray	**6ES7193-6LR10-0AA0**
• 1 000 labeling strips on paper sheet in A4 format, light gray	**6ES7193-6LA10-0AA0**
BU cover for covering empty slots (gaps); 5 units	
• 15 mm wide	**6ES7133-6CV15-1AM0**
• 20 mm wide	**6ES7133-6CV20-1AM0**
Shield connection Pack with 5 shield supports and 5 shield terminals	**6ES7193-6SC00-1AM0**
Color-coding labels	
• 15 mm wide	
- Color code CC02, for 16 push-in terminals; for BU type A0, A1; terminals 1 to 8 gray, terminals 9 to 16 blue, 10 units	**6ES7193-6CP02-2MA0**
- Color code CC71, for 10 AUX terminals 1A to 10A, yellow/green; for BU type A0 with push-in terminals; 10 units	**6ES7193-6CP71-2AA0**
- Color code CC72, for 10 AUX terminals 1A to 10A, red; for BU type A0 with push-in terminals; 10 units	**6ES7193-6CP72-2AA0**
- Color code CC73, for 10 AUX terminals 1A to 10A, blue; for BU type A0 with push-in terminals; 10 units	**6ES7193-6CP73-2AA0**
• 20 mm wide	
- Color code CC81, for 4 AUX terminals 1A to 4A, yellow/green, for BU type B0; 10 units	**6ES7193-6CP81-2AB0**
- Color code CC82, for 4 AUX terminals 1A to 4A, red, for BU type B0; 10 units	**6ES7193-6CP82-2AB0**
- Color code CC83, for 4 AUX terminals 1A to 4A, blue, for BU type B0; 10 units	**6ES7193-6CP83-2AB0**

Overview

ET 200SP I/O module

- Can be plugged into type A0 or A1 BaseUnits (BU) with automatic coding
- LED display for error, operation, power, and status
- Clear labeling on front of module
  - Plain text identification of the module type and function class
  - 2D matrix code (article and serial number)
  - Connection diagram
  - Hardware and firmware version
  - Color code CC for module-specific color coding of the potentials at the terminals of the BU
  - Complete Article No.
- Optional labeling accessories
  - Labeling strips
  - Reference identification label
- Optional module-specific color identification of the terminals according to the color code CC

Design

Analog input modules

- 2, 4 or 8-channels
- Color coding of the module type AI: Light blue
- Usable types:
  - AI 4xU/I 2-wire Standard for BU type A0 or A1, color code CC03
  - AI 4xI 2/4-wire Standard for BU type A0 or A1, color code CC03
  - AI 2xU/I 2/4-wire High Feature for BU type A0 or A1, color code CC05
  - AI 4xI 2-wire HART High Feature for BU type A0 or A1, color code CC03
  - AI 4xRTD/TC 2-, 3-, 4-wire High Feature for BU type A0 or A1, color code CC00
  - AI 8xRTD/TC 2-wire High Feature for BU type A0 or A1, color code CC00
  - AI Energy Meter Standard for BU type D0, color code CC00

Analog output modules

- 2 or 4 channels
- Color coding of the module type AQ: Dark blue
- Usable types:
  - AQ 4xU/I Standard for BU type A0 or A1, color code CC00
  - AQ 2xU/I High Feature for BU type A0 or A1, color code CC00

Ordering data

	Article No.
Analog input modules	
Analog input modules	
• AI 4xU/I 2-wire Standard, BU type A0 or A1, color code CC03, 16 bit, ± 0.3%	**6ES7134-6HD00-0BA1**
• AI 4xI 2-, 4-wire Standard, BU type A0 or A1, color code CC03, 16 bit, ± 0.3%	**6ES7134-6GD00-0BA1**
• AI 2xU/I 2/4-wire High Feature, BU type A0 or A1, color code CC05, 16-bit, ± 0.1 %	**6ES7134-6HB00-0CA1**
• AI 4xI 2-wire HART High Feature, BU type A0 or A1, color code CC03, 16-bit, ± 0.3 %	**6ES7134-6TD00-0CA1**
• AI 4xRTD/TC 2-, 3-, 4-wire High Feature BU type A0 or A1, color code CC00, 16 bit, ± 0.1%	**6ES7134-6JD00-0CA1**
• AI 8xRTD/TC 2-wire High Feature BU type A0 or A1, color code CC00, 16 bit, ± 0.1%	**6ES7134-6JF00-0CA1**
• AI Energy Meter Standard, BU type D0, color code CC00	**6ES7134-6PA00-0BD0**
Usable type A0 BaseUnits	
BU15-P16+A0+2D BU type A0; BaseUnit (light), 15 mm wide, with 16 process terminals to the module; for starting a new load group (max. 10 A)	**6ES7193-6BP00-0DA0**
BU15-P16+A0+2B BU type A0; BaseUnit (dark), 15 mm wide, with 16 process terminals to the module; for continuing the load group	**6ES7193-6BP00-0BA0**
BU15-P16+A10+2D BU type A0; BaseUnit (light), 15 mm wide, with 16 process terminals (1...16) to the module and an additional 10 internally jumpered AUX terminals (1A to 10 A); for starting a new load group (max. 10 A)	**6ES7193-6BP20-0DA0**
BU15-P16+A10+2B BU type A0; BaseUnit (dark), 15 mm wide, with 16 process terminals (1...16) to the module and an additional 10 internally jumpered AUX terminals (1A to 10 A); for continuing the load group	**6ES7193-6BP20-0BA0**
Usable type A1 BaseUnits (temperature detection)	
BU15-P16+A0+2D/T BU type A1; BaseUnit (light), 15 mm wide, with 16 process terminals to the module; for starting a new load group (max. 10 A)	**6ES7193-6BP00-0DA1**
BU15-P16+A0+2B/T BU type A1; BaseUnit (dark), 15 mm wide, with 16 process terminals to the module; for continuing the load group	**6ES7193-6BP00-0BA1**
BU15-P16+A0+12D/T BU type A1; BaseUnit (light), 15 mm wide, with 16 process terminals (1...16) to the module and an additional 2 × 5 internally jumpered add-on terminals (1B to 5B and 1C to 5C); for starting a new load group (max. 10 A)	**6ES7193-6BP40-0DA1**
BU15-P16+A0+12B/T BU type A1; BaseUnit (dark), 15 mm wide, with 16 process terminals (1...16) to the module and an additional 2 × 5 internally jumpered add-on terminals (1B to 5B and 1C to 5C); for continuing the load group	**6ES7193-6BP40-0BA1**

Ordering data	Article No.
Usable type D0 BaseUnits	
BU20-P12+A0+0B BU type D0; BaseUnit with 12 push-in terminals, without AUX terminals, bridged to the left	6ES7193-6BP00-0BD0
Accessories	
Reference ID labels 10 sheets with 16 strips each	6ES7193-6LF30-0AW0
Labeling strips	
• 500 labeling strips on roll, light gray	6ES7193-6LR10-0AA0
• 1 000 labeling strips on paper sheet in A4 format, light gray	6ES7193-6LA10-0AA0
BU cover For covering empty slots (gaps); 5 units	
• 15 mm wide	6ES7133-6CV15-1AM0
• 20 mm wide	6ES7133-6CV20-1AM0
Shield connection Pack with 5 shield supports and 5 shield terminals	6ES7193-6SC00-1AM0
Color-coded labels, 15 mm wide	
• Color code CC03, module-specific, for 16 push-in terminals; for BU types A0, A1; 10 units	6ES7193-6CP03-2MA0
• Color code CC05, module-specific, for 16 push-in terminals; for BU type A0, A1; 10 units	6ES7193-6CP05-2MA0
• Color code CC71, for 10 AUX terminals 1A to 10A, yellow/green; for BU type A0 with push-in terminals; 10 units	6ES7193-6CP71-2AA0
• Color code CC72, for 10 AUX terminals 1A to 10A, red; for BU type A0 with push-in terminals; 10 units	6ES7193-6CP72-2AA0
• Color code CC73, for 10 AUX terminals 1A to 10A, blue; for BU type A0 with push-in terminals; 10 units	6ES7193-6CP73-2AA0
• Color code CC74, for 2 × 5 add-on terminals, 5 × red, 5 × blue, for BU type A1, with push-in terminals; 10 units	6ES7193-6CP74-2AA0

Analog output modules

Analog output modules	
• AQ 4xU/I Standard, BU type A0 or A1, color code CC00, 16 bit, ± 0.3%	6ES7135-6HD00-0BA1
• AQ 2xU/I High Feature, BU type A0 or A1, color code CC00, 16 bit, ± 0.1 %	6ES7135-6HB00-0CA1
Usable type A0 BaseUnits	
BU15-P16+A0+2D BU type A0; BaseUnit (light), 15 mm wide, with 16 process terminals to the module; for starting a new load group (max. 10 A)	6ES7193-6BP00-0DA0
BU15-P16+A0+2B BU type A0; BaseUnit (dark), 15 mm wide, with 16 process terminals to the module; for continuing the load group	6ES7193-6BP00-0BA0
BU15-P16+A10+2D BU type A0; BaseUnit (light), 15 mm wide, with 16 process terminals (1...16) to the module and an additional 10 internally jumpered AUX terminals (1A to 10 A); for starting a new load group (max. 10 A)	6ES7193-6BP20-0DA0
BU15-P16+A10+2B BU type A0; BaseUnit (dark), 15 mm wide, with 16 process terminals (1...16) to the module and an additional 10 internally jumpered AUX terminals (1A to 10 A); for continuing the load group	6ES7193-6BP20-0BA0
Usable type A1 BaseUnits (temperature detection)	
BU15-P16+A0+2D/T BU type A1; BaseUnit (light), 15 mm wide, with 16 process terminals to the module; for starting a new load group (max. 10 A)	6ES7193-6BP00-0DA1
BU15-P16+A0+2B/T BU type A1; BaseUnit (dark), 15 mm wide, with 16 process terminals to the module; for continuing the load group	6ES7193-6BP00-0BA1
BU15-P16+A0+12D/T BU type A1; BaseUnit (light), 15 mm wide, with 16 process terminals (1...16) to the module and an additional 2 × 5 internally jumpered add-on terminals (1B to 5B and 1C to 5C); for starting a new load group (max. 10 A)	6ES7193-6BP40-0DA1
BU15-P16+A0+12B/T BU type A1; BaseUnit (dark), 15 mm wide, with 16 process terminals (1...16) to the module and an additional 2 × 5 internally jumpered add-on terminals (1B to 5B and 1C to 5C); for continuing the load group	6ES7193-6BP40-0BA1
Accessories	
Reference ID labels 10 sheets with 16 strips each	6ES7193-6LF30-0AW0
Labeling strips	
• 500 labeling strips on roll, light gray	6ES7193-6LR10-0AA0
• 1 000 labeling strips on paper sheet in A4 format, light gray	6ES7193-6LA10-0AA0
BU cover for covering empty slots (gaps), 15 mm wide; 5 units	6ES7133-6CV15-1AM0
Shield connection Pack with 5 shield supports and 5 shield terminals	6ES7193-6SC00-1AM0
Color-coded labels, 15 mm wide	
• Color code CC71, for 10 AUX terminals 1A to 10A, yellow/green; for BU-type A0 with push-in terminals; 10 units	6ES7193-6CP71-2AA0
• Color code CC72, for 10 AUX terminals 1A to 10A, red; for BU-type A0 with push-in terminals; 10 units	6ES7193-6CP72-2AA0
• Color code CC73, for 10 AUX terminals 1A to 10A, blue; for BU-type A0 with push-in terminals; 10 units	6ES7193-6CP73-2AA0
• Color code CC74, for 2 × 5 add-on terminals, 5 × red, 5 × blue; for BU-type A1, with push-in terminals; 10 units	6ES7193-6CP74-2AA0

Overview

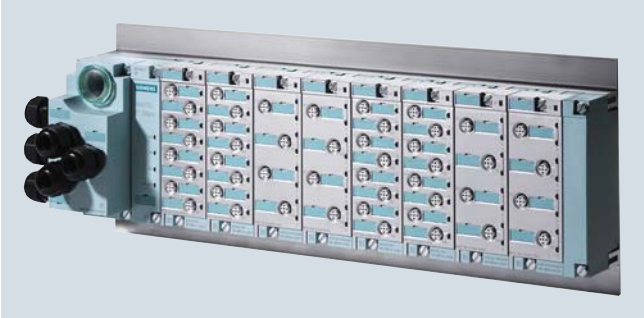

SIMATIC ET 200pro is a modular I/O system with high IP65/66/67 protection suitable for use at machine level outside the control cabinet. As a result of the innovative design, the ET 200pro has a relatively small size and can be flexibly adapted to the requirements of the respective automation task with regard to the connection system and I/Os. Summary of the most important features of the SIMATIC ET 200pro:

- Distributed I/O system with IP65/67 protection for use without a control cabinet at machine level
- Small, multi-functional complete solution: analog and digital I/O modules as well as safety-related digital I/O modules
- Communication over PROFIBUS DP, transmission rate up to 12 Mbit/s
- Mixed arrangement of safety-oriented and standard modules in the same station possible
- Free selection of connection system: direct, ECOFAST or M12 7/8"
- Power module for simple implementation of load groups
- Hot swapping of modules
- Simple assembly and independent wiring
- Comprehensive diagnostics: exact to the module or channel

Design

The architecture of the ET 200pro is based on the proven separation of modules from the bus/power supply connection system. This permits the T functionality for bus and 24 V DC power supply for the interface module, and prewiring of sensor/actuator connections for the electronics modules (independent wiring). When servicing, the independent wiring permits hot swapping of an electronics module without having to switch off the remaining station. This can continue without interruption during the replacement. When replacing an electronics module, the complete I/O wiring remains on the connection module, and need be neither labeled nor removed.

Up to 16 electronics modules can be arranged in any order between the interface module (left) and the terminating module (right limit).

Modules of an ET 200pro remote I/O station

The ET 200pro modules are usually designed in two or three parts. Interface and power modules as well as digital and analog electronics modules comprise:

- Bus module as mechanical and electrical connection element of the individual ET 200pro modules (they form the backplane bus of the system)
- Electronics or interface module
- Connection module

The ET 200pro modules are fitted when delivered on the associated bus module.

A ET 200pro remote I/O station consists of:

- Module support
- Interface module for PROFIBUS DP
- Connection module for the PROFIBUS DP interface module
  - CM IM DP direct with up to 6 M20 cable glands
  - CM IM DP ECOFAST Cu
  - CM IM DP M12 7/8"
- Max. 16 electronics modules with associated connection modules which may be assembled up to a station width of 1 m
- Terminating module (included in scope of delivery of interface module)

Expansion modules

The following expansion modules are available:

- Digital electronics modules
- Analog electronic modules
- Safety-related electronic modules
- I/O connection modules
  - CM IO 4 × M12 for digital or analog electronics modules
  - CM IO 8 × M12 for digital electronics modules
  - CM IO 12 × M12 for 4/8 F-DI/4 F-DO
  - CM IO 16 × M12 for 8/16 F-DI
- Power module electronics PM-E
- Connection modules for power module
  - CM PM-E direct with up to 2 M20 cable glands
  - CM PM-E ECOFAST Cu
  - CM PM-E 7/8"

Module support

Various module supports are available for mounting the ET 200pro:

- Narrow module support
  With two mounting flanges, the ET 200pro remote I/O station can be completely pre-installed on this module support on the workbench.

- Compact-narrow module support
  The compact-narrow module support permits the most space-saving design.

Expansion limits

- Number of electronics modules per station (between interface module and terminating module): up to 16
- Max. width (without module support): 1 m
- Electronics/sensor supply 1L+ max. 5 A per station
- Load voltage supply 2L+ max. 10 A per potential group
- Maximum address range of a station: 244 bytes for inputs and 244 bytes for outputs

ET 200pro configuration

The TIA Selection Tool can be used to assemble an ET 200pro remote I/O station quickly and easily. The tool is familiar with the configuration rules and supports users in the selection of all components and associated accessories in interactive mode.

www.siemens.com/tia-selection-tool

Note:

Please note when working with the TIA Selection Tool that the applications and product range of ET 200pro are limited in the context of SIMATIC PCS 7!

Integration

The distributed ET 200pro remote I/O stations are connected to SIMATIC PCS 7 automation systems (controllers) via PROFIBUS DP. Data transfer rates of up to 12 Mbit/s are possible.

The SIMATIC ET 200pro is integrated into SIMATIC PCS 7 using standard driver blocks. You can therefore configure and parameterize the ET 200pro remote I/O stations in the SIMATIC Manager of the engineering system very simply using HW Config.

Technical specifications

Technical specifications - General	
Electronics modules	• Digital inputs/outputs • Analog inputs/outputs • Safety-related digital inputs/outputs
Connection system for actuator/sensor	M12 round plug connection with standard assignments for actuator/sensor
Data transfer rate, max.	12 Mbit/s (PROFIBUS DP)
Supply voltage	24 V DC
Current consumption of an ET 200pro (internal and sensor supply, non-switched voltage), up to 55 °C, max.	≤ 5 A
Load current for ET 200pro per incoming supply (IM, PM, switched voltage), up to 55 °C, max.	10 A
For total configuration with looping through (several ET 200pro), up to 55 °C, max.	16 A (with direct connection module)
Degree of protection	IP65/66/IP67 for interface, digital and analog modules
Material	Thermoplast (glass-fiber reinforced)
Ambient conditions	
Temperature	0 … 55 °C (-25 °C on request)
Relative humidity	5 … 100 %
Atmospheric pressure	795 … 1 080 hPa
Mechanical stress	
Vibrations	Vibration test in accordance with IEC 60068 Part 2-6 (sine) • Constant acceleration 5 g, occasionally 10 g, for interface, digital and analog modules • 2 g for motor starters
Shock	• Shock test according to IEC 680068 Part 2-27, half-sine, 30 g, 18 ms duration for interface, digital and analog modules • 15 g, 11 ms duration for motor starters
Approvals	UL, CSA and cULus

For detailed technical specifications, especially for individual components such as interface modules, power modules and electronic modules, see Catalog ST 70, Chapter "IO systems" or Industry Mall under “Automation technology - Automation systems - SIMATIC industrial automation systems - IO systems - SIMATIC ET 200 systems without control cabinets" – SIMATIC ET 200pro".

Overview

The IM 154-2 DP High Feature interface module is responsible for PROFIBUS communication between the ET 200pro station and the host automation system (controller) as PROFIBUS DP master. The scope of delivery of the interface module also includes a terminating module which is plugged in following the last electronics module of the station.

Function

Features of the IM 154-2 DP High Feature interface module

- Mounted on delivery on the bus module
- Connects the ET 200pro station to the PROFIBUS DP via the connection module
- Prepares the data for the connected electronics modules
- Max. 16 electronics modules can be operated on an interface module - also safety-related
- PROFIBUS DP address of the ET 200pro station can be set on the connection module
- Terminating resistor of the PROFIBUS DP can be switched on and off on the connection module
- Maximum address range: 244 bytes for inputs and 244 bytes for outputs
- Powers the ET 200pro station via the connection module with the sensor/electronics supply 1L+ and the load power supply 2L+
- Integral power module for the load power supply 2L+
- Can be operated as DP-V1 slave on Y link

Ordering data

	Article No.
IM154-2 High Feature interface module for ET 200pro; for communication between ET 200pro and host masters over PROFIBUS DP; supports PROFIsafe	**6ES7154-2AA01-0AB0**
Connection modules for IM154-2 High Feature interface module	
• CM IM DP ECOFAST connection module for connection of PROFIBUS DP and 24 V DC power supply to PROFIBUS interface modules, 2 ECOFAST Cu connectors	**6ES7194-4AA00-0AA0**
• CM IM DP direct connection module for direct connection of PROFIBUS DP and 24 V DC power supply to PROFIBUS interface modules, up to six M20 cable glands	**6ES7194-4AC00-0AA0**
• CM IM DP M12 7/8" connection module for connection of PROFIBUS DP and 24 V DC power supply to PROFIBUS interface modules, 2 × M12 and 2 × 7/8"	**6ES7194-4AD00-0AA0**
Cables and further accessories	
For cables and further accessories for CM IM DP ECOFAST, CM IM DP direct and CM IM DP M12 7/8" connection modules, see Catalog ST 70, Chapter "IO systems" or Industry Mall under "Automation technology – Automation systems – SIMATIC industrial automation systems – IO systems – SIMATIC ET 200 systems without control cabinets – SIMATIC ET 200pro"	
General accessories	
ET 200pro module support	
• Narrow, for interface, electronics and power modules	
- 500 mm	**6ES7194-4GA00-0AA0**
- 1 000 mm	**6ES7194-4GA60-0AA0**
- 2 000 mm, can be cut to length	**6ES7194-4GA20-0AA0**
• Compact-narrow, for interface, electronics and power modules	
- 500 mm	**6ES7194-4GC70-0AA0**
- 1 000 mm	**6ES7194-4GC60-0AA0**
- 2 000 mm, can be cut to length	**6ES7194-4GC20-0AA0**
Spare fuse 12.5 A fast-blow, for interface and power modules, 10 units per pack	**6ES7194-4HB00-0AA0**

Accessories

Connection modules

The connection module for the IM 154-2 DP High Feature interface module (to be ordered separately) is available in three different connection versions:

- CM IM DP direct
- CM IM DP ECOFAST Cu
- CM IM DP M12 7/8"

The PROFIBUS address can be set on the connection module per DIL switch. The segmenting terminating resistor can be connected using a further DIL switch.

Overview

The following digital electronics modules can be used for connecting actuators/sensors in the context of SIMATIC PCS 7:

Digital input modules

- EM 8 DI DC 24 V High Feature
  - Digital electronics module with eight inputs
  - Suitable for standard switches and proximity switches (BEROs)
  - Rated input voltage 24 V DC
  - Diagnostics "Short-circuit of sensor supply to ground" per channel
  - Diagnostics "Open-circuit" per channel
  - Process alarm
  - Parameterizable input delay

Digital output modules

- EM 4 DO DC 24 V; 2 High Feature
  - Digital electronics module with four outputs
  - Suitable for solenoid valves, DC contactors and indicator lights
  - Output current 2 A per output
  - Rated load voltage 24 V DC
  - Diagnostics "Short-circuit of outputs to ground" per channel
  - Diagnostics "Short-circuit of outputs to P" per channel
  - Diagnostics "Open-circuit in outputs" per channel
  - Diagnostics "Load voltage missing" per module
  - Parameterizable substitute value

Ordering data

	Article No.
Digital electronic modules	
Digital input modules	
Digital input module 8 DI High Feature 24 V DC, with channel diagnostics, including bus module. Connection module must be ordered separately	**6ES7141-4BF00-0AB0**
Digital output modules	
Digital output module 4 DO High Feature 24 V DC, 2 A, with channel diagnostics, including bus module. Connection module must be ordered separately	**6ES7142-4BD00-0AB0**
Accessories	
Connection module CM IO 4 × M12 4 M12 sockets for connecting digital or analog sensors/actuators to ET 200pro	**6ES7194-4CA00-0AA0**
Connection module CM IO 8 × M12 8 M12 sockets for connecting digital sensors/actuators to ET 200pro	**6ES7194-4CB00-0AA0**
Module labels for color-coded identification of the CM IOs in white, red, blue and green; pack with 100 units of each color	**6ES7194-4HA00-0AA0**
Further accessories	
Connectors, cables and further accessories, see Catalog ST 70, section "IO systems" or Industry Mall under "Automation engineering – Automation systems – SIMATIC industrial automation systems – IO systems – SIMATIC ET 200 systems without control cabinets – SIMATIC ET 200pro"	

Accessories

Connection modules

Actuators and sensors are connected using commercially-available 5-contact M12 plugs on the connection module. The connection module is plugged onto the electronics module, and screwed to the latter. The following connection modules (to be ordered separately) are available for the above-mentioned electronics modules:

- CM IO 4x M12 (for EM DI and EM DO)
- CM IO 8x M12 (for EM DI)

Depending on the selected connection module, each plug for the 8-channel digital input module has one or two channels:

- 4 x M12 round plug connections with 2 channels per plug (double assignment)
- 8 x M12 round plug connections with 1 channel per plug (single assignment)

Overview

The following analog electronics modules can be used for connecting actuators/sensors in the context of SIMATIC PCS 7:

Analog input modules

EM 4 AI U High Feature

- 4 inputs for voltage measurements
- Input ranges:
  - ± 10 V, resolution 15 bit + sign
  - ± 5 V, resolution 15 bit + sign
  - 0 to 10 V, resolution 15 bit
  - 1 to 5 V, resolution 15 bit
- Electrically isolated from load voltage 2L+
- Diagnostics "Short-circuit of sensor supply to M" per module
- Diagnostics "Short-circuit, open-circuit" per channel (depending on measuring range)
- Hardware interrupt with limit violation on channel 0
- Permissible common mode voltage 5 V AC pp

EM 4 AI I High Feature

- 4 inputs for current measurements
- Input ranges:
  - ± 20 mA, resolution 15 bit + sign
  - 0 to 20 mA, resolution 15 bit
  - 4 to 20 mA, resolution 15 bit
- Two-wire and four-wire transmitters can be connected
- Electrically isolated from load voltage 2L+
- Diagnostics "Short-circuit of sensor supply to M" per module
- Diagnostics "Short-circuit, open-circuit" per channel (depending on measuring range)
- Hardware interrupt with limit violation on channel 0
- Permissible common mode voltage 5 V AC pp

EM 4 AI RTD High Feature

- 4 inputs for isolated (floating) resistance measurements or resistance thermometers with 2-, 3- and 4-wire connections
- Input ranges:
  - Resistance measurement: 150 Ω; 300 Ω; 600 Ω; 3000 Ω; resolution 15 bit
  - Resistance thermometer: Pt100; Ni100; Ni120; Pt200; Ni200; Pt500; Ni500; Pt1000; Ni1000; resolution 15 bit + sign
- Automatic compensation of line resistances with 3-wire and 4-wire connections
- Parameterizable temperature coefficient with resistance-type sensors
- Electrically isolated from load voltage supply 1L+ and 2L+
- Linearization of sensor characteristics
- Diagnostics "Open-circuit" per channel (terminals 1 and 3 are monitored for open-circuit)
- Permissible common mode voltage 10 V AC pp

EM 4 AI TC High Feature

- 4 inputs for isolated/non-isolated thermocouples or voltage measurement; resolution 15 bits + sign
- Input ranges:
  - Voltage measurement ± 80 mV
  - Thermocouples: Type B, E, J, K, L, N, R, S, T
- Inputs are isolated from the encoder voltage supply 1L+ and load voltage supply 2L+
- Linearization of the voltage characteristic (conversion of the thermoelectric voltage to a temperature value)
- Smoothing
- Interference frequency suppression
- Various options to compensate for the reference temperature
- Overflow and underflow diagnostics

Analog output modules

EM 4 AO U High Feature

- 4 outputs for voltage output
- Output ranges:
  - ± 10 V, resolution 15 bits + sign
  - 1 to 5 V, resolution 14 bit
  - 0 to 10 V, resolution 15 bit
- Electrically isolated from sensor supply voltage 1L+
- Diagnostics "Short-circuit of sensor supply to M" per module
- Diagnostics "Open-circuit in outputs" per channel
- Substitute value output

EM 4 AO I High Feature

- 4 outputs for current output
- Output ranges:
  - ± 20 mA, resolution 15 bit + sign
  - 4 to 20 mA, resolution 14 bit
  - 0 to 20 mA, resolution 15 bit
- Electrically isolated from sensor supply voltage 1L+
- Diagnostics "Short-circuit of sensor supply to M" per module
- Diagnostics "Open-circuit" per channel
- Substitute value output

Ordering data

	Article No.
Analog electronic modules	
Analog input modules	
Analog input module 4 AI U High Feature, ±10 V; ±5 V; 0 to 10 V; 1 to 5 V, channel diagnostics, including bus module. The connection module must be ordered separately.	**6ES7144-4FF01-0AB0**
Analog input module 4 AI I High Feature, ±20 mA; 0 to 20 mA; 4 to 20 mA, channel diagnostics, including bus module. The connection module must be ordered separately.	**6ES7144-4GF01-0AB0**
Analog input module 4 AI RTD High Feature; resistances: 150, 300, 600 and 3 000 Ohm; resistance thermometers: Pt100, 200, 500, 1000, Ni100, 120, 200, 500 and 1000; channel diagnostics, including bus module. The connection module must be ordered separately.	**6ES7144-4JF00-0AB0**
Analog input module 4 AI TC High Feature; thermocouples: Type B, E, J, K, L, N, R, S, T; voltage measurement ±80 mV; channel diagnostics, including bus module. The connection module must be ordered separately.	**6ES7144-4PF00-0AB0**
Analog output modules	
Analog output module 4 AO U High Feature, ±10 V; 0 to 10 V; 1 to 5 V, channel diagnostics, including bus module. The connection module must be ordered separately.	**6ES7145-4FF00-0AB0**
Analog output module 4 AO I High Feature, ±20 mA; 0 to 20 mA; 4 to 20 mA, channel diagnostics, including bus module. The connection module must be ordered separately.	**6ES7145-4GF00-0AB0**
Accessories	
Connection module CM IO 4 × M12 4 M12 sockets for connecting digital or analog sensors/actuators to ET 200pro	**6ES7194-4CA00-0AA0**
Module labels for color-coded identification of the CM IOs (white, red, blue, green); pack with 100 units of each color	**6ES7194-4HA00-0AA0**
Further accessories	
Connectors, cables and further accessories, see Catalog ST 70, section "IO systems" or Industry Mall under "Automation engineering – Automation systems – SIMATIC industrial automation systems – IO systems – SIMATIC ET 200 systems without control cabinets – SIMATIC ET 200pro"	

Accessories

Connection modules

Actuators and sensors are connected using commercially-available 5-contact M12 plugs on the connection module. The connection module is plugged onto the electronics module, and screwed to the latter. The connection module CM IO 4 x M12 (to be ordered separately) is available for the electronics modules.

Overview

In combination with the safety-related automation systems of the SIMATIC PCS 7 process control system, the safety-related electronics modules of SIMATIC ET 200pro can be used to implement safety applications. The safety-related digital inputs record the signal statuses from safety-related sensors, and generate corresponding safety telegrams for the automation system. Depending on the safety telegrams of the automation system, the safety-related digital outputs trigger safe shut-down procedures. They are also responsible for monitoring short-circuits and cross-circuits up to the actuator. The safe communication with the automation systems is carried out over PROFIBUS with PROFIsafe.

All modules are certified up to SIL 3 (IEC 61508) and Cat. 4 (EN954-1).

Design

The following modules are available:

Safety-related digital input module EM 8/16 F-DI PROFIsafe

- 16 inputs (SIL2/Cat.3) or 8 inputs (SIL3/Cat.3 or Cat.4)
- Suitable for standard switches and 3/4-wire proximity switches (BEROs)
- Rated input voltage 24 V DC
- 4 short-circuit-proof sensor supplies for 4 inputs each
- External sensor power supply possible
- Group fault display (SF; red LED)
- Fault display for each sensor power supply (Vs1F to Vs4F) is output on the VsF LED and the associated channels
- Status and fault displays per input (dual-color green/red LED)
- Identification data
- Configurable diagnostics
- Can only be operated in safety mode

Safety-related digital input/output module EM 4/8 F-DI, 4 F-DO 2 A

- Inputs
  - 8 inputs (SIL 2/Cat. 3) or 4 inputs (SIL 3/Cat. 3 or Cat. 4)
  - Suitable for standard switches and 3/4-wire proximity switches (BEROs)
  - Rated input voltage 24 V DC
  - 2 short-circuit-proof sensor supplies for 4 inputs each
  - External sensor power supply possible
- Outputs
  - 4 outputs, current sourcing/sinking
  - Output current 2 A
  - Rated load voltage 24 V DC
  - Suitable for solenoid valves, DC contactors and indicator lights
- Group fault display (SF; red LED)
- Fault display for each sensor power supply (Vs1F to Vs2F) is output on the VsF LED and the associated channels
- Status and fault displays per input/output (dual-color green/red LED)
- Identification data
- Configurable diagnostics
- Achievable safety class SIL 3
- Can only be operated in safety mode

Ordering data

	Article No.
Safety-related electronic modules	
Safety-related digital input module	
Safety-related digital input module 8/16 F-DI PROFIsafe 24 V DC, including bus module. Connection module must be ordered separately	**6ES7148-4FA00-0AB0**
Safety-related digital input/output module	
Safety-related digital input/output module 4/8 F-DI, 4 F-DO 2 A 24 V DC, including bus module. Connection module must be ordered separately	**6ES7148-4FC00-0AB0**
Accessories	
Connection module	
• CM IO 16 × M12 for the electronic module 8/16 F-DI, 24 V DC/2 A	**6ES7194-4DD00-0AA0**
• CM IO 12 × M12 for the electronic module 4/8 F-DI4 F-DO, 24 V DC/2 A	**6ES7194-4DC00-0AA0**
Further accessories	
Connectors, cables and further accessories, see Catalog ST 70, section "IO systems" or Industry Mall under "Automation engineering – Automation systems – SIMATIC industrial automation systems – IO systems – SIMATIC ET 200 systems without control cabinets – SIMATIC ET 200pro"	

Accessories

Connection modules

Actuators and sensors are connected using commercially available 5-pin M12 plugs on the connection module. The connection module is plugged onto the electronics module, and screwed to the latter. One of the following connection modules (to be ordered separately) is required for each of the above-mentioned electronics modules:

- Connection module CM IO 16 x M12
  for the electronics module 8/16 F-DI, 24 V DC/2 A
- Connection module CM IO 12 x M12
  for the electronics module 4/8 F-DI/4 F-DO, 24 V DC/2 A

Overview

The power module PM-E DC 24 V is used within an ET 200pro station when generating 24 V DC load voltage groups for electronics modules.

You can position power modules in an ET 200pro station anywhere to the right of the interface module. The first power module is already integrated in the interface module.

Each power module installed in the ET 200pro remote I/O station interrupts the load voltage busbar and opens a new potential group (common potential) for the 2L+ load voltage supply. All subsequent load voltages of the electronics modules are fed from this power module. Each power module has a replaceable fuse for protecting the device. Only line protection according to DIN VDE 0100 need be provided externally in addition.

The electronics/sensor supply 1L+ is not interrupted by the power module, it is looped through.

The power module is fitted on the associated bus module when delivered.

Ordering data

	Article No.
Power module	
Power module PM-E DC 24 V For generating 24 V DC load voltage groups for electronic modules within an ET 200pro station	**6ES7148-4CA00-0AA0**
Accessories	
Connection modules for power module	
• Connection module CM PM-E ECOFAST for supply of 24 V DC load voltage, 1 ECOFAST Cu connector	**6ES7194-4BA00-0AA0**
• Connection module CM PM-E direct for supply of 24 V DC load voltage, one or two M20 cable glands	**6ES7194-4BC00-0AA0**
• Connection module CM PM-E 7/8" for supply of 24 V DC load voltage, 1 x 7/8"	**6ES7194-4BD00-0AA0**
Spare fuse 12.5 A fast-blow, for interface and power modules, 10 units per pack	**6ES7194-4HB00-0AA0**
Further accessories	
For connectors, cables and further accessories, see Catalog ST 70 or Industry Mall under "Automation technology – Automation systems – SIMATIC industrial automation systems – I/O systems – SIMATIC ET 200 systems without control cabinet – SIMATIC ET 200pro".	

Accessories

Connection module

The connection module for the power module PM-E is used to connect the load voltage 2L+. It is fitted on the power module.

The module must be ordered separately, and is available with the following types of connection:

- CM PM-E direct
- CM PM-E ECOFAST
- CM PM-E 7/8"

Overview

SIMATIC ET 200pro PS, 24 V, 8 A

The SIMATIC ET 200pro PS is a power supply with IP67 degree of protection which features the same technology and design as the ET 200pro distributed I/O system.

It is suitable for single-line installation on the ET 200pro module rack, but can also be mounted directly on a mounting plate.

Locating the power supply away from the electronics cabinet/enclosure reduces the thermal load and the required size for the cabinet/enclosure.

The power is supplied at connector X1. The X2 connector allows the mains voltage to be looped to other modules.

The cable for the 24 V DC supply of the ET 200pro is connected via ECOFAST standard connectors to the SIMATIC ET 200pro PS. The other cable end is left open, enabling it to be fitted with an ECOFAST connector, 7/8" round connector or a programming device screw connector and individually adapted to the various connection systems of power module terminal modules of the ET 200pro.

SIMATIC ET 200pro PS reports its status via signaling contacts for "24 V DC OK" and "Overtemperature".

Ordering data

	Article No.
SIMATIC ET 200pro PS, 8 A Stabilized power supply in the technology and design of the ET 200pro distributed I/O system, permitting the loop-through of energy to further modules; with degree of protection IP67 Input: 3 400 ... 480 V AC Output: 24 V DC, 8 A	**6ES7148-4PC00-0HA0**
Accessories	
Cable connectors for power connection	
• For X1 (power input); Socket insert HAN Q4/2, angled, with screw; 5 contact sockets 6 mm², 2 auxiliary contacts 0.5 mm²	**3RK1911-2BE30**
• For X2 (looping mains voltage) Pin insert HAN Q4/2, angled, with screw; 4 contact pins 4 mm²	**3RK1911-2BF10**
Sealing cap For 9-pole power sockets	
• X2 (1 unit)	**3RK1902-0CJ00**
• X2 (10 units)	**3RK1902-0CK00**

More information

For more information and technical specifications of the SIMATIC ET 200pro PS power supply, see "SITOP Power Supplies in SIMATIC Design" in the Catalog KT 10.1.

Additional information is available via the Internet at:

- SITOP power supplies:
  www.siemens.de/sitop
- CAx data (2D, 3D, circuit diagram macros):
  www.siemens.com/sitop-cax
- Operating instructions:
  www.siemens.com/sitop/manuals
- SITOP Selection Tool for selecting power supplies:
  www.siemens.com/sitop-selection-tool

Notes

Overview

In the process industry, discontinuous processes – so-called batch processes – are of great significance. Permanently shorter product lifecycles as well as the versatility required by consumers are two of the reasons for this.

Product quality that stays the same even in the umpteenth batch, quick response to changed market conditions, traceability for production (FDA compliance), fulfillment of legal standards, as well as the economic and technical necessity to utilize production plants flexibly and optimally – all of this places high demands on plant automation.

The SIMATIC PCS 7 process control system with the SIMATIC BATCH software package offers the right solution for low-cost and effective automation of batch processes.

SIMATIC BATCH is completely integrated in SIMATIC PCS 7, both in the visualization and in the engineering system. Thanks to the modular design and the flexible scaling, it can be used in small test centers as well as in production plants of any size.

Design

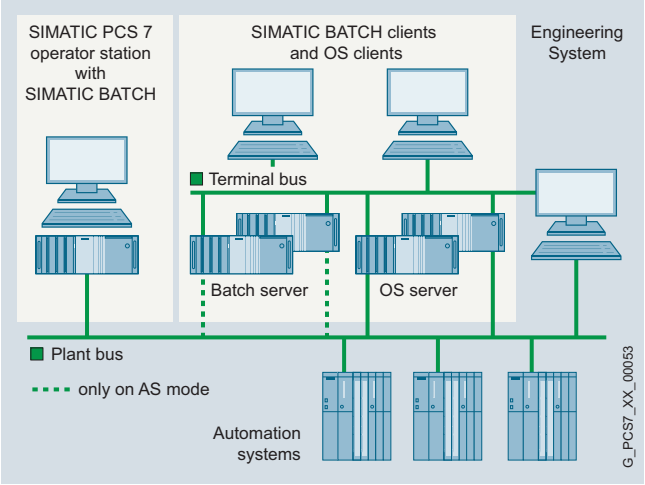

SIMATIC BATCH, scalable from single-user up to client/server system

Scalability

SIMATIC BATCH is configured as a single station system or as a client/server system and can be used in plants of any size due to its modular architecture and scalability in cumulative SIMATIC BATCH UNITs (sets of 1, 10 and 50 plant unit instances).

Single-user system for small applications

For small batch applications, SIMATIC BATCH can be installed together with the OS software on a single station system. Both the SIMATIC PCS 7 ES/OS Single Station and the SIMATIC PCS 7 BOX are suitable as a single station. Both can be combined with modular automation systems from the S7-400 series as well as with compact SIMATIC PCS 7 AS RTX.

Client/server configuration

However, characteristic for the automation of batch processes using SIMATIC BATCH are client/server architectures with which one Batch server and multiple Batch clients running a plant project in unison. The batch server in such a configuration can also be configured with redundancy in order to increase availability.

BATCH clients and OS clients can run on separate or common basic hardware. In addition to the SIMATIC PCS 7 Industrial Workstations, the more compact SIMATIC PCS 7 Box OS Clients 627D and SIMATIC PCS 7 OS Clients 427D/477D are also suitable as a Batch client.

The Batch server software provided for configuration of a Batch server (SIMATIC BATCH Basic or SIMATIC BATCH server) usually runs on dedicated server hardware (Batch server). Depending on the load on the operator system, the OS Server and Batch Server software can also be run on shared server hardware (OS/Batch Server).

Design (continued)

The hardware configuration of the batch server depends on the SIMATIC BATCH operating mode:

- In **PC mode**, the complete recipe logic is executed in the Batch server. If SIMATIC BATCH is only executed in PC mode, the Batch server does not require a connection to the plant bus. Communication with the automation system is via the operator system.
- In **AS mode**, the recipe unit logic is executed in the automation system. Mixed operation with PC operating mode is also possible within a batch where recipe units are run on both the batch server and on the automation system. In AS mode, the batch server requires a connection to the plant bus for communication with the automation system.

System connection

Batch Single Station and Batch Server can be connected to the Industrial Ethernet plant bus via a CP 1623/CP 1628/ CP 1613 A2 communication module or via a simple Fast Ethernet network adapter with BCE (suitable for communication with up to 8 automation systems; not redundant systems).

The IE versions of the SIMATIC PCS 7 Workstation for single stations and servers are equipped with a CP 1623 communication module with the SIMATIC NET HARDNET-IE S7 communications software. When using redundant automation systems, the SIMATIC PCS 7 workstation requires SIMATIC NET HARDNET-IE S7-REDCONNECT communications software instead of the SIMATIC NET HARDNET-IE S7 communication software. The SIMATIC NET HARDNET-IE S7-REDCONNECT PowerPack is suitable for upgrading the communications software (for ordering data, see section "Communication", section "Industrial Ethernet, System Connection of PCS 7 systems", page 10/47).

The 10/100/1000 Mbps Ethernet RJ45 port is already onboard and can be used for connecting to the terminal bus.

Redundancy

SIMATIC BATCH supports the Batch server redundancy. The two batch servers in a redundant pair of servers have identical configurations. A separate redundant connection between these servers is used to optimize the internal communication. This must always be provided as an Ethernet connection. This also applies if SIMATIC BATCH software and SIMATIC PCS 7 OS software are installed together on the redundant pair of servers. The serial RS 232 connection described in the section "OS redundancy" is not possible in this case.

A redundant optical or electrical connection can be used depending on the environmental conditions and the distance between the two batch servers, e.g. up to 100 m per crossover network cable (RJ45 connectors). For details, refer to Manual "High Availability process control systems"; for appropriate cable material and further accessories, refer to Catalog IK PI.

For information and components for the redundant bus connection (plant bus and terminal bus), see the section "Communication", "Industrial Ethernet" and "System connection of PCS 7 systems", page 10/47.

Note:

Licenses for the server, API and UNITs must be installed on both servers for the redundant version.

Basic hardware

The modularity and flexibility of SIMATIC BATCH are optimally supported by the hardware available. The basic hardware from the section "Industrial Workstation/IPC" as well as the SIMATIC PCS 7 BOX from the section "Compact systems" can be used for SIMATIC BATCH. Please note that the operating system and the ES/OS software of the SIMATIC PCS 7 process control system are pre-installed as standard on the SIMATIC PCS 7 Industrial Workstations of version Single Station, Server and Client. If these basic devices are used for SIMATIC BATCH, it is possible to extend or reject the existing SIMATIC PCS 7 installation, and restore it for the operating system using the restore DVD.

Expansion options

OS/Batch Single Station and Batch Client can be optionally expanded for multi-monitor mode with up to 4 monitors. Using multi-monitor mode, the visualization of a plant/unit can be divided among 2 to 4 process monitors per operator station using different views. These plant sections can all be operated using just one keyboard and one mouse.

Note:

Since all messages from SIMATIC BATCH are processed in the operator system's message system, the use of a signal module is only recommendable with multi-function OS/batch stations (clients, single stations).

Integration

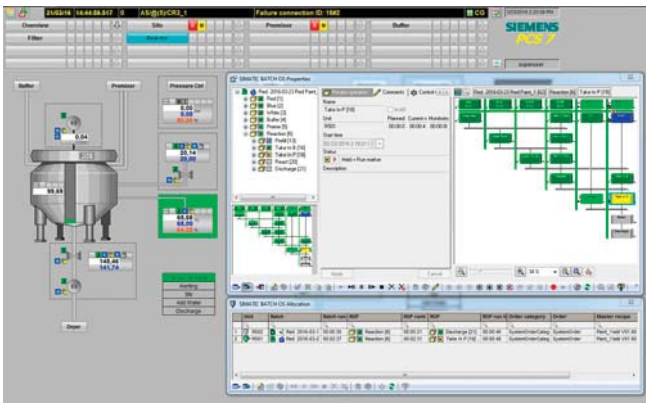

Process display with integrated OS Control

Integration in SIMATIC PCS 7

SIMATIC BATCH is fully integrated in SIMATIC PCS 7. The plant data can be configured entirely using the engineering system. The engineering system transfers all data required for creating recipes to the batch server. It is therefore possible to edit recipes separate from the engineering system. Changes to the configuration which are made on the engineering system can be transferred to the batch server using an update function (online/offline).

SIMATIC BATCH supports the operation and monitoring of batch processes by means of standard faceplates (faceplates and OS controls integrated in the process picture).

The SIMATIC Logon integrated in SIMATIC PCS 7 uses SIMATIC BATCH for the following functions:

- Central user administration with access control
- "Electronic Signature" function
  This means that actions cannot be performed until enabled by authorized users/user groups.

A smart card reader suitable as a logon device is offered in section "Industrial Workstation/IPC", under "Expansion components, smart card reader", page 3/53.

Operating modes for recipe processing

- PC mode: Processing of the recipe logic in the batch server
- AS mode: Execution of recipe logic in the automation system
- Mixed operation: Parallel application of PC and AS modes in one batch (unit recipe-granular)

SIMATIC BATCH works as standard in PC mode. The complete control recipe is executed in the batch server. In the alternative AS operating mode, the control recipe logic can be executed in the automation system unit recipe-granular.

Advantages of AS mode are:

- Very fast step changing times
- Improved deterministics during execution of a batch
- Enhanced availability

Communication with the automation systems

Depending on the operating mode, SIMATIC BATCH communicates with the automation systems via the operator system or directly via S7-DOS.

SFC instances derived from a SFC type template are generally used as the interface to the subordinate automation level. The properties of the SFC type can be defined in a properties dialog, including:

- Control strategies
- Setpoint/actual value
- Instance parameters
- Timers

In addition to the SFC instances, individual unit parameters can be described by parameter steps of the recipe.

Overview

The product structure of the SIMATIC BATCH software is optimized for configuration of client-server systems and single station systems. SIMATIC BATCH Basic and SIMATIC BATCH Server are two alternative software products for the server installation and differ in their functional scope.

Additional functions of SIMATIC BATCH Server compared to SIMATIC BATCH Basic are, for example:

- ROP Library
- Separation Procedures/Formulas
- Electronic signature
- MES High Level Synchronization
- Route Control Integration

In exceptional cases, the SIMATIC BATCH client software can also be operated on the Batch server. However, the preferred target system for the SIMATIC BATCH client software is the standalone Batch client.

The SIMATIC BATCH Single Station package is intended for the Batch single station. The SIMATIC BATCH recipe system already integrated in the SIMATIC BATCH Single Station package must be ordered separately for the stations of the client/server system. The SIMATIC BATCH API can be optionally used in both the Batch Single Station and in batch servers.

The SIMATIC BATCH project can be matched quantitatively to the plant size using SIMATIC BATCH UNITs (cumulative quantity options for instances of units).

Software products/licenses	Batch Single Station	Batch server	Redundant pair of batch servers		Batch Client
			Server A	Server B	
Basic software					
SIMATIC BATCH Single Station Package	●	–	–	–	–
SIMATIC BATCH Basic[1)]	–	●	●	●	–
SIMATIC BATCH Server[1)]	–	●	●	●	–
SIMATIC BATCH Client	–	o	o	o	●
SIMATIC BATCH Recipe System	–	o	o	o	o[2)]
SIMATIC BATCH API	o	o	o	o	–
Quantity options: Cumulative SIMATIC BATCH UNITs[3)]					
1 UNIT	o	o	o	o	–
10 UNITs	o	o	o	o	–
50 UNITs	o	o	o	o	–

SIMATIC BATCH software products/licenses for Batch Single Station, Batch Server and BATCH Client

1) Alternative Batch Server software: SIMATIC BATCH Server with full functionality or SIMATIC BATCH Basic with reduced range of functions

2) A client/server system is required on at least one client.

3) Instances of units; at least one SIMATIC BATCH UNIT license is required per project.

● Software product/license required
o Software product/license optional
– Software product/license not required or not available

Function

Recipe editor

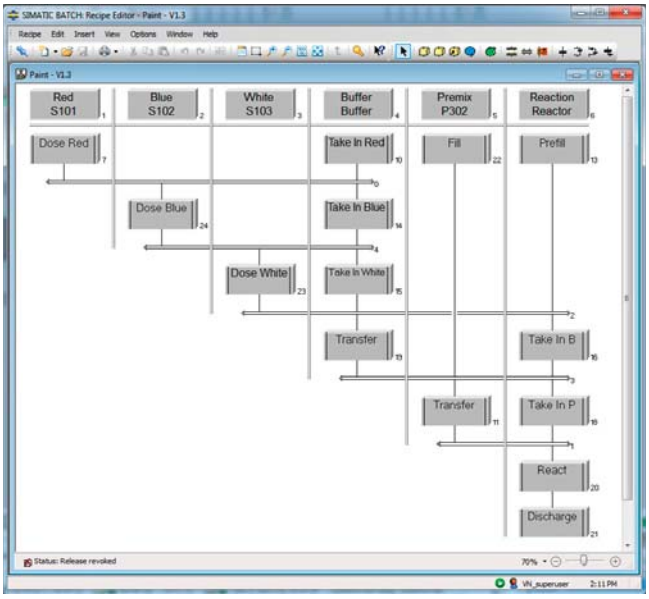

The recipe editor is integrated in the SIMATIC BATCH Single Station Package and can be installed as a functional expansion component of the SIMATIC BATCH Recipe System on a batch client and batch server.

It is used for easy, intuitive creation and modification of master recipes and library operations. The basis for recipe creation are the batch objects created from the plant configuration using the SIMATIC PCS 7 Engineering System, e.g. units and equipment phases.

The Batch Recipe Editor can be started individually, but can also be launched from the Batch Control Center (BatchCC). It possesses a GUI, processing functions typical to Microsoft Windows for individual and grouped objects, and a structural syntax check.

The recipe editor offers powerful functions for the following tasks:

- Creation of new master recipes and library operations
- Definition of user interface in the project settings
- Modification of existing master recipes and library operations (changes in structure or parameters)
- Querying the states of recipe objects and process values in transition conditions
- Assignment of route control locations as transfer parameters (source, target, via) to the transport phases, in order to direct products of one batch to other units (local or external)
- Configuration of arithmetic expressions for calculating setpoints for transitions and recipe parameters from recipe variables and constants
- Documentation of master recipes and library operations
- Validation under inclusion of user-specific plausibility checks
- Selection of unit candidates via a class-based view or limitation of the equipment properties
- Releasing master recipes and library operations for test or production

Hierarchical recipes according to ISA-88.01

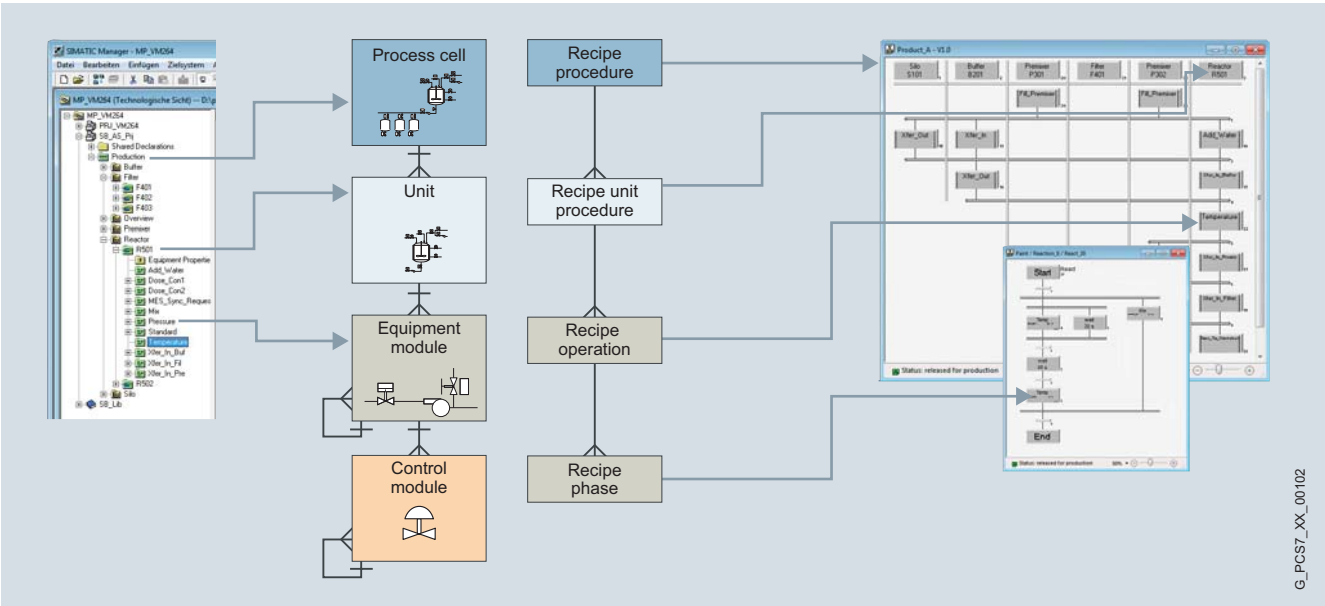

Hierarchical recipes according to ISA-88.01

Function (continued)

SIMATIC BATCH supports hierarchical recipes in accordance with the ISA-88.01 standard. SIMATIC BATCH and SIMATIC PCS 7 form a functional unit that fully covers the models described in the standard.

The hierarchical recipe structure is mapped on the plant module as follows:

- Recipe procedure for controlling the process or the production in a plant
- Recipe unit procedure for controlling a process step in a plant unit
- Recipe operation/function for the process engineering task/ function in an equipment module

Recipe elements for handling of exceptions

Monitoring of process states is possible during runtime by marking freely selectable recipe sections. It is then possible to automatically react to evaluated events or faults using a command block or jump function in a special container.

ROP Library

Recipe operations managed in a user library (ROP library) can be installed in the recipe procedures of hierarchical recipes as a reference and thus modified centrally.

This reduces the effort for engineering and validation. If the reference link is broken, the recipe operation becomes a fixed component of the recipe procedure, and is thus independent of further central modifications.

Separation Procedures/Formulas

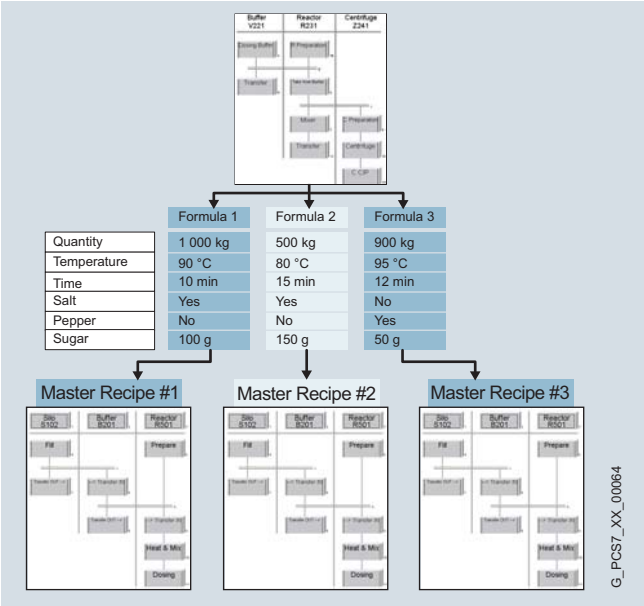

The flexibility achieved by recipes which are independent of specific units can be increased even further if the procedure and parameter sets (formulas) are separated from one another. Various master recipes can be created by linking several formulas using a single recipe procedure. This enables central modification of procedures. The formula structure is determined by the formula category defined by the user.

Batch Control Center (BatchCC)

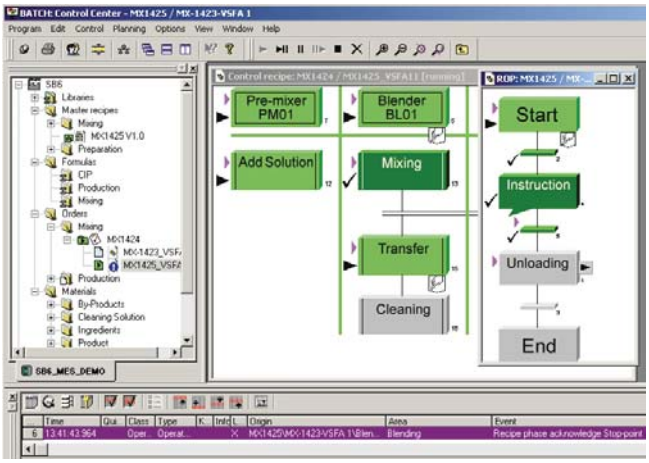

The SIMATIC BATCH Batch Control Center (BatchCC) is the "command center" for monitoring and controlling batch processes with SIMATIC BATCH. Using BatchCC you can manage all data relevant to SIMATIC BATCH through a graphical user interface.

BatchCC offers powerful functions for the following tasks:

- Import and update of basic automation plant data
- Definition of user privileges for all functions, for clients, or for plant units of SIMATIC BATCH
- Definition of material names and codes
- Management of master recipes
- Management of libraries with recipe elements (library operations)
- Editing of formula categories and management of associated formulas (parameter sets)
- Creation of master recipes from control recipe
- Exporting and importing of master recipes, formulas and library objects
- Creation of batches with master recipes
- Starting of batch processing and controlling of batches
- Monitoring and diagnostics of batch processing
- Allocation strategy for recipe creation and unit allocation at batch runtime
- Online modification, deletion or insertion of objects (RPH, ROP, RUP) and structure elements (loops, transitions, etc.) of the recipe (special privileges and explicit authorization required)
- Recording and archiving of recipes and batch data
- Calling of SFC visualization directly from the control recipe

Function (continued)

Batch OS Control

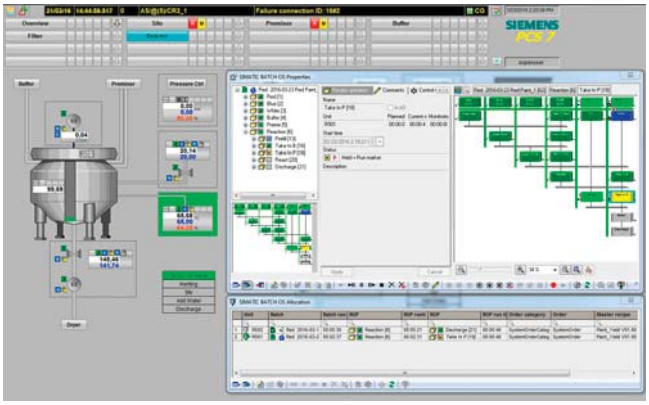

Batch OS Control

OS Controls which can be directly superimposed on the process display provide you with a practical alternative to BatchCC for the operation and monitoring of batch processes.

The following OS controls are available:

- Unit overview
- ROP overview
- Batch creation
- Job and batch overview
- Batch operation and monitoring

Batch planning

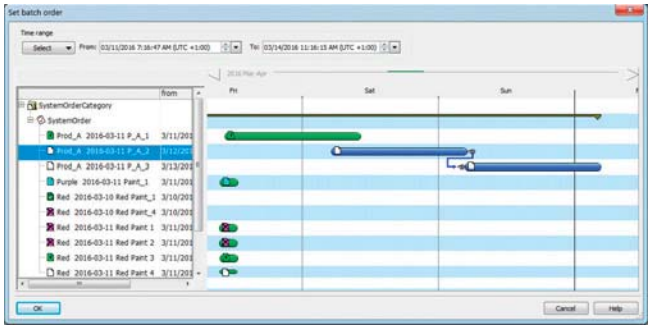

Batch Control Center enables the creation of individual production orders and batches. However, Batch Planning offers significantly more planning functions. The batches for a large number of production orders can then be planned in advance.

The functional scope not only includes planning, but also modification, cancellation, deletion and release of batches. Creation and distribution of the batches for a production order are possible manually, but can also be carried out automatically depending on the definition of the batch number or production quantity.

The following batch properties can be set and changed:

- Quantity
- Start mode (imMediately, following operator input, or time-driven)
- Unit allocation
- Formula (parameter set)
- Run sequence (chaining to previous or subsequent batch)
- Displaying the runtime of a batch
- Definition of minimum time interval for batch chaining

Batch planning and control are supported in a user-friendly manner and simplified, thanks to special displays such as the order category list, production order list, batch planning list, batch status list, or batch results list.

All batches including their unit allocation can be clearly presented in a combination of Gantt diagram and table. Time conflicts or those resulting from multiple allocation of units are identified by symbols. Time conflicts can be eliminated simply by shifting the associated batches in the Gantt diagram.

SIMATIC Batch API

The SIMATIC BATCH API Application Programming Interface, which is offered as an expansion component, is an open interface for customer-specific extensions. It provides users with access to data and functions of SIMATIC BATCH and enables programming of special applications for specific sectors or projects.

Ordering data

	Article No.
Basic software for Batch Single Station, Batch Server and Batch Client	
SIMATIC BATCH Single Station Package V8.2 6 languages (English, German, French, Italian, Spanish, Chinese), software class A, runs with Windows 7 Ultimate 64-bit, Windows Server 2008 R2 Standard 64-bit or Windows Server 2012 R2 Standard 64-bit, single license for 1 installation	
No SIMATIC PCS 7 Software Media Package	
• Physical delivery License key on USB flash drive, certificate of license	**6ES7657-0UX28-0YB0**
• Online delivery License key download, online certificate of license Note: Email address required!	**6ES7657-0UX28-0YH0**
SIMATIC BATCH Basic V8.2 Batch server software with reduced functionality	
6 languages (English, German, French, Italian, Spanish, Chinese), software class A, runs with Windows 7 Ultimate 64-bit, Windows Server 2008 R2 Standard 64-bit or Windows Server 2012 R2 Standard 64-bit, single license for 1 installation	
No SIMATIC PCS 7 Software Media Package	
• Physical delivery License key on USB flash drive, certificate of license	**6ES7657-0YX28-0YB0**
• Online delivery License key download, online certificate of license Note: Email address required!	**6ES7657-0YX28-0YH0**

	Article No.
SIMATIC BATCH Server V8.2 6 languages (English, German, French, Italian, Spanish, Chinese), software class A, runs with Windows 7 Ultimate 64-bit, Windows Server 2008 R2 Standard 64-bit, or Windows Server 2012 R2 Standard 64-bit, single license for 1 installation Installation	
No SIMATIC PCS 7 Software Media Package	
• Physical delivery License key on USB flash drive, certificate of license	**6ES7657-0TX28-0YB0**
• Online delivery License key download, online certificate of license Note: Email address required!	**6ES7657-0TX28-0YH0**
SIMATIC BATCH Client V8.2 6 languages (English, German, French, Italian, Spanish, Chinese), software class A, runs with Windows 7 Ultimate 64-bit, Windows 10 Enterprise 2015 LTSB 64-bit, Windows Server 2008 R2 Standard 64-bit or Windows Server 2012 R2 Standard 64-bit, floating license for 1 user	
No SIMATIC PCS 7 Software Media Package	
• Physical delivery License key on USB flash drive, certificate of license	**6ES7657-0VX28-0YB5**
• Online delivery License key download, online certificate of license Note: Email address required!	**6ES7657-0VX28-0YH5**

Ordering data

	Article No.
Functional add-on components	
SIMATIC BATCH Recipe System V8.2 For recipe creation; installation on at least one client of a client/server system (alone or in combination with the SIMATIC BATCH Client software)	
6 languages (English, German, French, Italian, Spanish, Chinese), software class A, runs with Windows 7 Ultimate 64-bit, Windows 10 Enterprise 2015 LTSB 64-bit, Windows Server 2008 R2 Standard 64-bit or Windows Server 2012 R2 Standard 64-bit, floating license for 1 user	
No SIMATIC PCS 7 Software Media Package	
• Physical delivery License key on USB flash drive, certificate of license	**6ES7657-0AX28-0YB5**
• Online delivery License key download, online certificate of license Note: Email address required!	**6ES7657-0AX28-0YH5**
SIMATIC BATCH API V8.2 1 language (English), software class A, runs with Windows 7 Ultimate 64-bit, Windows Server 2008 R2 Standard 64-bit or Windows Server 2012 R2 Standard 64-bit, single license for 1 installation	
No SIMATIC PCS 7 Software Media Package	
• Physical delivery License key on USB flash drive, certificate of license	**6ES7657-0MX28-2YB0**
• Online delivery License key download, online certificate of license Note: Email address required!	**6ES7657-0MX28-2YH0**

	Article No.
Quantity options for Batch Single Station and Batch Server (cumulative)	
SIMATIC BATCH UNITs[1)] For SIMATIC BATCH Single Station Package/SIMATIC BATCH Server software	
Language-neutral, software class A, single license for 1 installation	
No SIMATIC PCS 7 Software Media Package	
• Physical delivery License key on USB flash drive, certificate of license	
- 1 UNIT	**6ES7657-0XA00-0YB0**
- 10 UNITs	**6ES7657-0XB00-0YB0**
- 50 UNITs	**6ES7657-0XC00-0YB0**
• Online delivery License key download, online certificate of license Note: Email address required!	
- 1 UNIT	**6ES7657-0XA00-0YH0**
- 10 UNITs	**6ES7657-0XB00-0YH0**
- 50 UNITs	**6ES7657-0XC00-0YH0**

1) Instances of plant units

Route control

Overview

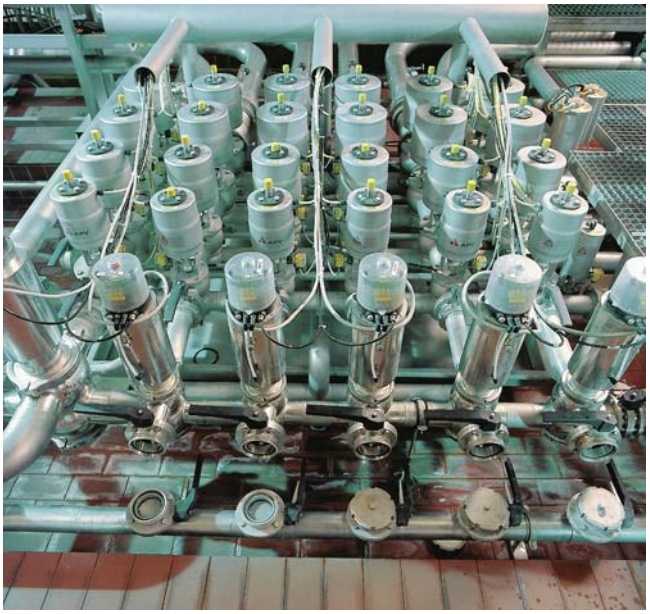

SIMATIC Route Control expands the SIMATIC PCS 7 process control system with a sector-independent tool for the configuration, control, monitoring and diagnostics of material transport in pipeline networks or on conveyor belts.

With this integrated route control, SIMATIC PCS 7 can also automate the connecting material transports in addition to the production processes and the associated stores. In this case SIMATIC Route Control can also be combined with SIMATIC BATCH.

In particular SIMATIC Route Control is perfect for plants with a multitude of complex route combinations or extensive tank farms such as are found above all in the chemical, petrochemical and food and drinks industries.

Application

The possible applications of SIMATIC Route Control extend from small plants with simple/static lines up to plants in the medium and upper performance range which have an extensive network of routes/pipes.

SIMATIC Route Control is particularly predestined for the following requirements:

- Frequent conversions and extensions of the transport network including actuators and sensors
- Transport routes with high flexibility, characterized by:
  - Regularly changing materials
  - Dynamic selection of the origin and destination of the material transport (including reversal of direction on bidirectional transport routes)
- Numerous simultaneous material transports
- Plant projects in combination with SIMATIC BATCH

When transporting solid materials on conveyor belts, the sequence for switching actuators on and off can be cascaded using WAIT elements.

Design

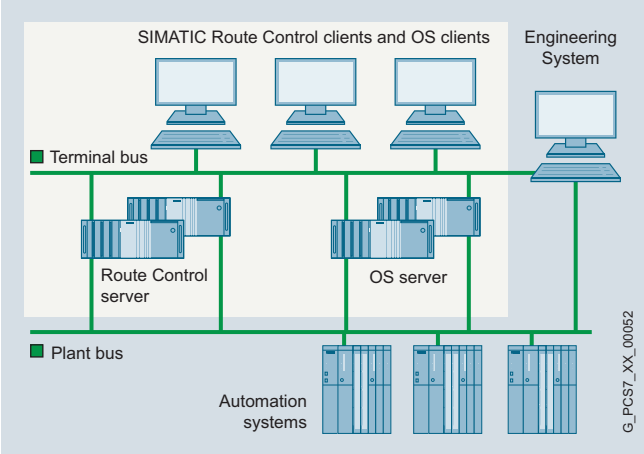

The modularity and flexibility of SIMATIC Route Control are optimally supported by the hardware available. The SIMATIC PCS 7 Industrial Workstations from the "Industrial Workstation/IPC" section can be used for SIMATIC Route Control.

Hardware for small plants

For small plants, SIMATIC Route Control can be installed either alone or together with the OS software on a single station system. You can select the hardware for this OS/RC single station from the section "Industrial Workstation/IPC", subsection "SIMATIC Rack PC".

Client/server configuration

Distributed multi-user systems with client-server architecture are typical for the automation of material transports with SIMATIC Route Control. Basically it is possible to operate an RC Server, Batch Server and OS Server on shared basic hardware. However, availability will be higher and performance better if each component has its own server hardware. The availability of the RC server can be increased further by a redundant design of the server hardware. SIMATIC PCS 7 supports a Route Control server or pair of Route Control servers for each multi-user system.

The Route Control client (RC Client) is represented by the Route Control Center (RCC). The RCC can be installed on an OS Client, a Batch Client or separate client hardware.

Design (continued)

System connection

RC server and OS/RC single stations can be connected to the Industrial Ethernet plant bus via a CP 1613 A2/1623/1628 communication module or via a simple Fast Ethernet network adapter with BCE (suitable for communication with up to 8 automation systems; not redundant systems).

The IE versions of the SIMATIC PCS 7 Workstation for single stations and servers are equipped with a CP 1623 communication module with the SIMATIC NET HARDNET-IE S7 communications software. When using redundant automation systems, the SIMATIC PCS 7 workstation requires SIMATIC NET HARDNET-IE S7-REDCONNECT communications software instead of the SIMATIC NET HARDNET-IE S7 communication software. The SIMATIC NET HARDNET-IE S7-REDCONNECT PowerPack is suitable for upgrading the communications software (for ordering data, see section "Communication", section "Industrial Ethernet, System Connection of PCS 7 systems", page 10/47).

Redundancy

The SIMATIC Route Control Server software supports the RC server redundancy. Further software components or a separate connection between the two servers as is the case with the OS server redundancy or batch server redundancy are not required.

With the assistance of the SIMATIC Route Control Server software, the two redundant RC servers carry out mutual monitoring during operation. If the active RC server fails, the redundant partner imMediately becomes the master and takes over operation. The RC clients are automatically switched over to the new master in this case. Following the return of the failed RC server, data matching is carried out with the active RC server with the latter remaining the master.

For information and components for the redundant bus connection (plant bus and terminal bus), see "Communication" chapter, "Industrial Ethernet" section and "System connection of PCS 7 systems", page 10/47.

Expansion options

OS/RC single stations and RC clients can be optionally expanded for multi-monitor mode with up to 4 monitors. Using multi-monitor mode, the visualization of a plant/unit can be divided among 2 to 4 process monitors per operator station using different views. These plant sections can all be operated using just one keyboard and one mouse.

Note:

Since all messages from SIMATIC Route Control are processed in the operator system's message system, it is not necessary to use a signal module.

Requirements for selection of the automation systems

SIMATIC Route Control supports standard automation systems, high availability and safety-related automation systems of the S7-400 range based on to the following CPU types:

- CPU 416-3 (up to 30 simultaneous material transports)
- CPU 410-5H, CPU 417-4 and CPU 417-4H (up to 300 simultaneous material transports)

Configuration

SIMATIC Route Control, which is fully integrated in SIMATIC PCS 7, is modular and scalable. It can be flexibly adapted to various sizes of plants by cumulatively adding SIMATIC Route Control routes (in sets of 10 and 50 for the number of simultaneous material transports) up to a project limit of 300 routes. SIMATIC Route Control provides graded user privileges for engineering, operating and maintenance personnel who are integrated into the user administration with SIMATIC logon. SIMATIC Logon is an integral component of SIMATIC PCS 7.

Route Control in the engineering system

The Route Control Engineering tool, the Route Control Library and the Route Control Wizard are concentrated together with the other engineering tools of the SIMATIC PCS 7 process control system in the central engineering system.

In SIMATIC PCS 7, blocks from a SIMATIC PCS 7 library are inserted into CFC plans and connected to plant control blocks in accordance with the technological requirements in order to control and monitor the elements of a plant. These individual connections are omitted with SIMATIC Route Control (RC). You adapt the standard blocks of the technological elements relevant to RC (RC elements) using standardized interface blocks from the RC library, and allow RC to control and monitor the elements during operation. This is of course also possible with existing plantswithout an increased overhead.

The blocks of the RC library support redundancy at the controller level, i.e. they can be used with standard automation systems or even with high availability automation systems or mixed configurations. The changes in the engineering system can be recorded (Change log), both in the SIMATIC PCS 7 project and in the RC project.

Route Control wizard

The Route Control Assistant functions as the interface between the PCS 7 basic configuration expanded by RC components and the RC engineering tool. It analyzes the hardware and software configuration of the SIMATIC PCS 7 (multi-)project, and generates a database which serves as the basis for further, RC-specific configuration with the RC engineering tool.

During the RC-specific configuration, the elements imported from the SIMATIC PCS 7 project by the Route Control Assistant must be inserted into a sub-route structure. These sub-routes divide the plant. The complete routes will be subsequently "joined together" from them during the automatic route searching. The response of the sub-routes in a particular function are already defined when inserting the elements into them. Functions represent the technological requirements when operating the plant (e.g. "Open source", "Pumps" etc.).

As a rule: the more finely divided the sub-route structure, the more flexible the subsequent automatic route searching. With purely static routes, a sub-route can already be a complete route.

Configuration (continued)

Route Control Server/Route Control Center

Following configuration of the route network and testing of the material transport versions, the Route Control configuration data is transferred to the Route Control server. There they can be activated via the Route Control Center at a suitable point in time from the process engineering viewpoint. From this time onwards, the new data are included in route searches.

If a material transport is pending during operation, a route (material transport) is requested by the controller (e.g. using an adapted RC SFC type) or by the operator on the Route Control Center. In addition to selection of the origin and destination as well as up to 10 interMediate plant points (*synonyms: nodes, locations*), this also includes the application of a start signal on the route control block RC_IF_ROUTE in the automation system (AS). The AS "informs" the RC Server which then starts searching for the route and – if possible – combines the statically defined sub-routes into a complete transport route. From this point onward, the Route Control takes over control and monitoring of all RC elements involved in the transport route. If faults occur, detailed diagnostics information is provided concerning the cause, e.g. why the search for a suitable transport route was unsuccessful. The plant control program only switches the individual technological functions, everything else is handled by the Route Control.

The Route Control Server (RC Server) supplies the Route Control Clients (Route Control Center) with the necessary data and transfers their operations to the automation systems.

For maintenance purposes, an automation system can be specifically set to "in maintenance" (out of service). The material transports being carried out by this automation system are still continued until finished. However, new material transports are no longer permitted.

RC block symbols and faceplates

In the process displays of the SIMATIC PCS 7 operator systems, each route block is represented by an RC block symbol and an RC faceplate. Through a route block's RC block symbol it is possible to select its RC faceplate, and through a route block's RC faceplate it is possible to select the Route Control Center.

Overview

The Route Control Software is structured such that SIMATIC Route Control can be flexibly adapted to different plant sizes and architectures (single/multi-user systems):

- Route Control Engineering (component of the SIMATIC PCS 7 Engineering System)
- Route Control Server
- Route Control Center (RCC)

SIMATIC Route Control works closely with the operator system, hence where small plants are concerned it is possible for the Route Control Center and Route Control Server to be installed not only on their own but also together with the OS software on a single station. The ordering data for the OS software can be found in the section "Operator system".

In the case of multi-user systems with small quantity frameworks it is also possible to operate the Route Control Server, Batch Server and OS Server on shared basic hardware. However, availability will be higher and performance better if they are installed on separate server hardware.

The Route Control Center (RCC) can be installed on an OS client, a batch client, or on separate RC client hardware.

Software components (runtime)	RC single station	RC server single	RC server redundant		RC client
			Server A	Server B	
SIMATIC Route Control Server	●	●	●	●	–
SIMATIC Route Control Center	●	–	–	–	●
Quantity options: cumulative SIMATIC Route Control Routes[1)]					
• 10 routes[1)]	o	o	o	o	–
• 50 routes[1)]	o	o	o	o	–

SIMATIC Route Control software for RC single station, RC server, and RC client

1) Number of simultaneous material transports; at least one "SIMATIC Route Control Routes" license (for sets of 10/50) is required per project, total project limit: 300 routes

● Software product/license required
o Software product/license optional
– Software product/license not required or not available

In addition to the SIMATIC Route Control Server and SIMATIC Route Control Center runtime software, for a Route Control project you require separately available SIMATIC Route Control Routes (cumulative sets of 10 and 50 for the number of simultaneous material transports). Several sets of 10 and 50 SIMATIC Route Control Routes licenses can be combined up to a total project limit of 300 routes.

Function

Route Control Server

The Route Control Server supplies the RC Clients (Route Control Center) with the necessary data and transfers their operations to the automation systems. When a material transport is requested through the Route Control Center, it is the job of the RC Server to dynamically compile a suitable transport route from the partial routes which were configured using a map of the automation systems on the basis of the selected parameters (source, destination and interMediate locations) and with due consideration of other parameters (e.g. function catalogs, function IDs or material IDs). Configuration changes can be taken imMediately into account in the determination of a suitable transport route after transfer from the Route Control Engineering Tool to the Route Control Server and subsequent activation through the Route Control Center (online loading).

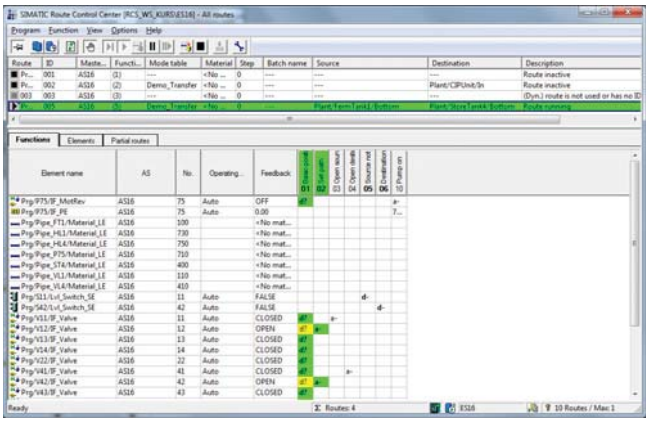

Route Control Center

Route Control Center (RCC)

The RCC can be called either from the faceplate of a route block or from the keyset on the operator station. It displays all of a material transport's relevant route data and error information in several coordinated views

Key functional features are:

- Overview of all RC elements, partial routes and request details
- Operation of the selected material transport:
  - Selection of operating mode: Manual/automatic
  - Request, start, stop, continue and terminate material transport in manual mode
  - Set/modify request parameters (origin, destination, interMediate points) as well as general properties (function catalog, function ID, material ID and "ignore fault") in manual mode
  - Enable/disable sequence functions in manual mode
- Diagnostics of material transport request errors caused by locked RC elements, locked partial routes, inconsistent actuations or prohibited sequential material
- Diagnostics of currently running material transports: color and text display of transport route status in the route view of the RCC; detailed analyses by evaluation of feedback signals from RC elements
- Server functions: select RC Server, display RC Server status, update view (read in data again from the RC Server)
- Display of the operator who has logged on
- Definition of route parameters (source, destination, material, function ID etc.), and saving and loading these settings with names
- Switchover between "AS in maintenance" and "AS in operation"

Route Control Runtime Software

Ordering data

	Article No.
SIMATIC Route Control Server V8.2 for single station or client/server configuration 6 languages (English, German, French, Italian, Spanish, Chinese), software class A, runs with Windows 7 Ultimate 32/64-bit, Windows Server 2008 R2 Standard 64-bit or Windows Server 2012 R2 Standard 64-bit, single license for 1 installation	
No SIMATIC PCS 7 Software Media Package	
• Physical delivery License key on USB flash drive, certificate of license	**6ES7658-7FX28-0YB0**
• Online delivery License key download, online certificate of license Note: E-mail address required!	**6ES7658-7FX28-0YH0**

	Article No.
Quantity options for single station/server (cumulative)	
SIMATIC Route Control Routes[1] For expansion of the SIMATIC Route Control Server software for single station or client/server configuration, cumulative	
Language-neutral, software class A, single license for 1 installation	
No SIMATIC PCS 7 Software Media Package	
• Physical delivery License key on USB flash drive, certificate of license	
- 10 routes[1]	**6ES7658-7FF00-0XB0**
- 50 routes[1]	**6ES7658-7FG00-0XB0**
• Online delivery License key download, online certificate of license Note: E-mail address required!	
- 10 routes[1]	**6ES7658-7FF00-0XH0**
- 50 routes[1]	**6ES7658-7FG00-0XH0**
SIMATIC Route Control Center V8.2 6 languages (English, German, French, Italian, Spanish, Chinese), software class A, runs with Windows 7 Ultimate 32/64-bit, Windows 10 Enterprise 2015 LTSB 64-bit, Windows Server 2008 R2 Standard 64-bit or Windows Server 2012 R2 Standard 64-bit, floating license for 1 user	
No SIMATIC PCS 7 Software Media Package	
• Physical delivery License key on USB flash drive, certificate of license	**6ES7658-7EX28-0YB5**
• Online delivery License key download, online certificate of license Note: E-mail address required!	**6ES7658-7EX28-0YH5**

[1] Number of simultaneous material transports; total project limit: 300 routes

Overview

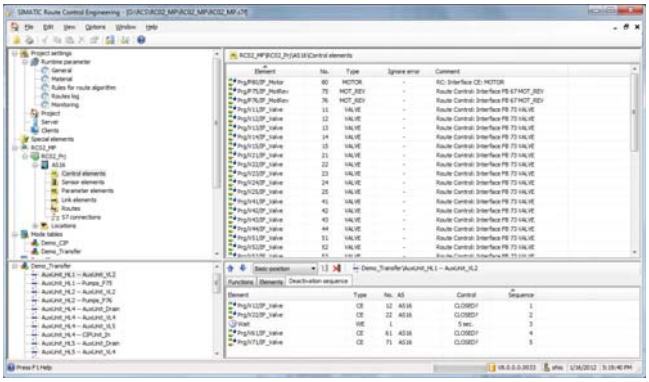

The Route Control (RC) configuration supplements the basic SIMATIC PCS 7 plant configuration with blocks from the PCS 7 standard library. Existing plants are then also easy to upgrade with SIMATIC Route Control. Technological elements of relevance for control of the material transport (RC elements) are adapted in the CFC Editor using uniform interface blocks from the Route Control Library. The RC elements include:

- Control elements (actuators)
- Sensor elements (sensors)
- Parameter elements (setpoints)
- Connection elements (material information related to partial route)
- WAIT elements

Function

Locations (synonym: nodes) of partial or complete routes are configured in the SIMATIC Manager as "Equipment properties of plant units" and transferred to the RC project together with the other RC-relevant basic data of the SIMATIC PCS 7 project. The configuration requirements caused by many repeated sequences can be minimized by exporting locations in CSV format, duplicating and modifying them using a spreadsheet program, and then importing them again.

Nodes are parameters for requesting a material transport (source, destination, interMediate locations/via) and which mark the start and end of each partial route, and thus also the source and destination of a material transport.

In addition to the basic tools (SIMATIC Manager, CFC, etc.) of the SIMATIC PCS 7 engineering system, the following configuration components of the SIMATIC Route Control Engineering program package are available for configuration of the route control applications:

Route Control library

The Route Control library contains blocks for RC and transport route configuration and interface blocks for RC elements. It is provided in the catalog of the CFC editor.

Route Control wizard

The Route Control wizard is the interface between the SIMATIC PCS 7 basic configuration supplemented with RC interface blocks and the actual RC configuration in the RC engineering tool. The wizard, which can be called up from the SIMATIC Manager menu, accepts the RC-specific configuration data of the SIMATIC PCS 7 project into the Route Control engineering. In doing so, it carries out plausibility checks, defines the AS-OS and AS-AS communication connections (NetPro and CFC), and configures the RC server signals.

Route Control Engineering tool

Following importing of the RC-relevant data of a SIMATIC PCS 7 project into an RC project, the RC-specific objects are configured using the Route Control Engineering tool:

- Partial routes:
  division of the transport paths into partial routes is used to increase the flexibility and minimize the configuring overhead by means of repeated application. Relevant partial route parameters: "bidirectional" and "priority" (lowest total of partial route priorities is decisive when searching for the overall route).
- Interconnections:
  Through inclusion in a partial route, the RC elements receive additional properties depending on the type, and these can be edited using configuration dialogs (e.g. in the basic setting: "close valve").
- Function catalogs:
  The partial routes can be assigned to function catalogs depending on technological and product-specific aspects, e.g. "cleaning" or "product transport". In the route search, function catalogs permit restriction of the resulting quantity to the type of material transport.
- Function steps/sequence functions:
  Function catalogs contain as many as 32 configurable technological sequence functions which define the sequence of material transport by means of the RC elements connected in the partial routes, e.g. base position of the control elements, open transport valves, open origin valve, switch on pump).

Configuration of the partial routes and assignment of the RC elements to the partial routes are performed in a matrix of the Route Control Engineering tool. With the aid of generic elements, objects or blocks generated on a user-specific basis can be integrated into the RC project and handled like RC elements.

Function (continued)

Graphical offline route search

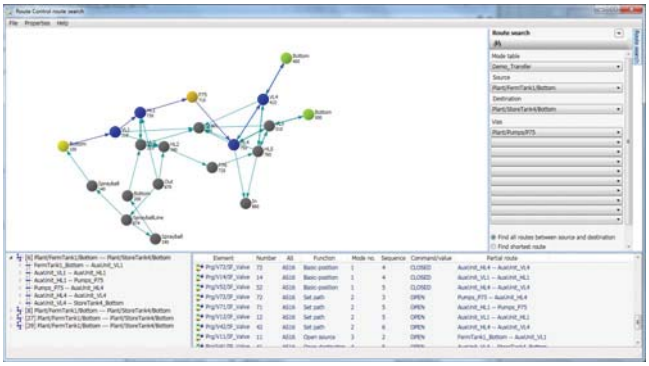

Graphical offline route search to determine all possible route combinations

Similarly to a navigation system, the graphically visualized offline route search determines all possible route combinations. Errors in the route network or undesired routes can be detected in advance. A preferred route can be selected from the results of the offline route search, and saved as a static route. An active route can also be saved for re-use via the Route Control Center. A saved route takes priority in a route request.

Special configuration functions

Special configuration functions make it easier to perform repetitive routine work and extend the range of options for controlling material transport, e.g.:

- Exporting configuration data in the form of CSV files to Microsoft Excel, copying and editing the data there, and then re-importing the files into Route Control
- Controlling the joint use of partial routes by configurable function IDs
- Checking material compatibilities and interlocking partial routes in case of incompatible material sequences based on the material ID saved in the connection element of the partial route
- Injection of dynamic (external) setpoints coming from the process at runtime into the route block (e.g. weighed quantity)

Ordering data

	Article No.
SIMATIC Route Control Engineering V8.2 6 languages (English, German, French, Italian, Spanish, Chinese), software class A, runs with Windows 7 Ultimate 32/64-bit, Windows Server 2008 R2 Standard 64-bit or Windows Server 2012 R2 Standard 64-bit, floating license for 1 user	
No SIMATIC PCS 7 Software Media Package	
• Physical delivery License key on USB flash drive, certificate of license	**6ES7658-7DX28-0YB5**
• Online delivery License key download, online certificate of license Note: E-mail address required!	**6ES7658-7DX28-0YH5**

13

Safety Integrated for Process Automation

14

Overview

The process industry frequently features complex technological sequences with high safety demands, and faults and failures in the process automation could have fatal consequences for personnel, machines, plants and the environment. The safety technology used must reliably detect dangerous states in the process and also its own internal errors, and automatically set the plant/application to a safe state.

Safety Integrated for Process Automation is the comprehensive range of products and services from Siemens for safe, high availability applications in the process industry. This is characterized by:

- Safety-related F/FH automation systems of the S7-400 series (see Chapter 8 "Automation systems")
- Failsafe communication with the PROFIsafe profile via PROFIBUS (see Section "Communication", PROFIBUS, from page 10/63) or PROFINET (see Section "Communication", PROFINET, from page 10/58)
- Failsafe transmitters (SITRANS P DS III) on the PROFIBUS PA with PROFIsafe (see Catalog FI 01, Field devices for process automation)
- ET 200M, ET 200iSP, ET 200S and ET 200pro distributed I/O systems with safety-oriented F-I/O modules/submodules (see chapter 11 "Process I/O")
- Failsafe process instruments/devices for connection to ET 200 distributed I/O systems (see Catalog FI 01, Field devices for process automation)
- SIMATIC Safety Integrated software for implementation and operation of safety applications, with additional components for the engineering system and the operator systems: S7 F Systems, SIMATIC Safety Matrix
- Special applications, for example, Partial Stroke Test
- Safety lifecycle management with support by highly qualified solution partners: services for all phases in the lifecycle of a safety instrumented system (analysis, implementation, and operation)

Benefits

Safety Integrated for Process Automation enables full integration of safety engineering into the SIMATIC PCS 7 process control system. The Basic Process Control System (BPCS) and Safety Instrumented System (SIS) combine seamlessly to form a uniform and innovative complete system. The advantages of this fusion are quite clear:

- One common controller platform
- One common engineering system
- No separate safety bus – standard and safety-related communication take place on the same fieldbus (PROFIBUS/ PROFINET with PROFIsafe)
- Mixed operation of standard and safety-related I/O modules in ET 200M, ET 200iSP, ET 200S and ET 200pro remote I/O stations
- Integrated data management – no complex data exchange between BPCS and SIS
- Integration of safety-related applications into process visualization on the operator station
- Automatic integration of safety-related fault messages with time tagging into the process control system
- Integration of safety-related hardware into the asset management with the SIMATIC PCS 7 Maintenance Station for diagnostics and preventive maintenance

Design

The PROFIsafe profile allows safety-related communication between the automation system (controller) and the process I/O via either PROFIBUS or PROFINET. The decision for choosing either PROFINET IO or the PROFIBUS DP/PA fieldbuses has a significant influence on the architecture of the safety-related system.

Safety-related design versions with PROFIBUS

In the case of a safety-related system with PROFIBUS communication integrated into SIMATIC PCS 7, a distinction is made across all architecture levels between two design versions:

- Single-channel, non-redundant design
- Redundant, high availability design

Both design versions are extremely variable, and offer a large scope for different customer requirements. Standard automation (basic process control) and safety-related functions can be combined flexibly, not only in the area of distributed I/O. Even at the controller level, they can be combined in one system or separated. In addition, there are numerous possibilities arising from the use of flexible modular redundancy.

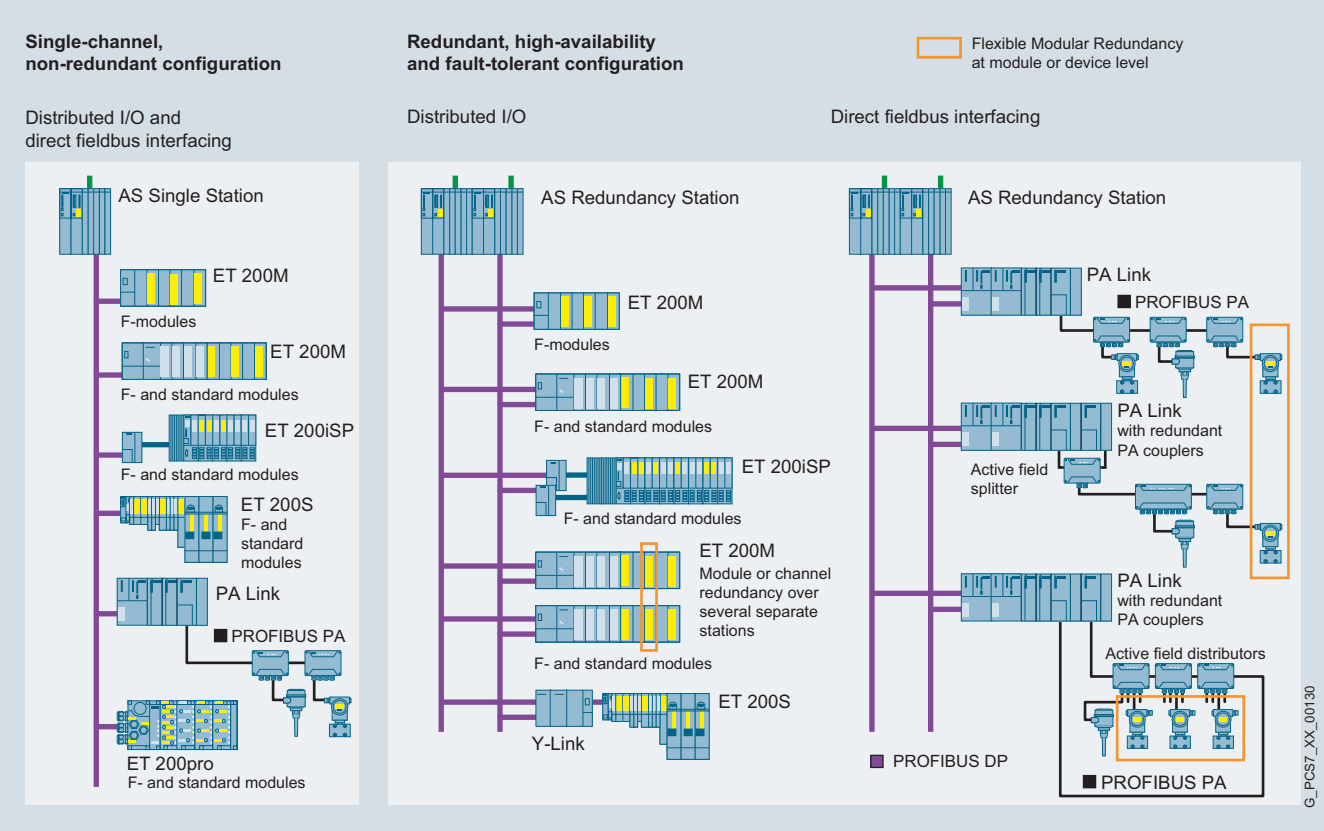

Safety-related design versions with PROFIBUS

Design (continued)

At the individual architectural levels (controller, fieldbus, distributed I/O), the configuration alternatives shown in the figure are available depending on the distributed I/O used (ET 200M, ET 200iSP, ET 200S, ET 200pro remote I/O stations or PROFIBUS PA devices with PA-Profile 3.0 or higher).

Safety-related design versions with PROFINET

Safety-related AS Single Stations (F systems) and AS Redundancy Stations (FH systems) from the S7-400 range can be networked simply and effectively with ET 200M remote I/O stations via PROFINET IO. The PN/IE interface integrated in the CPU is available for this on the side of the automation systems, and the IM 153-4 PN High Feature interface module in the ET 200M remote I/O stations.

The availability of the I/O devices on an AS Single Station (F systems) can be increased by a ring topology with Media redundancy. If the transmission link in the ring is interrupted at one point, for example, due to a break in the ring cable or the failure of a station, the redundancy manager then imMediately activates the alternative communication path.

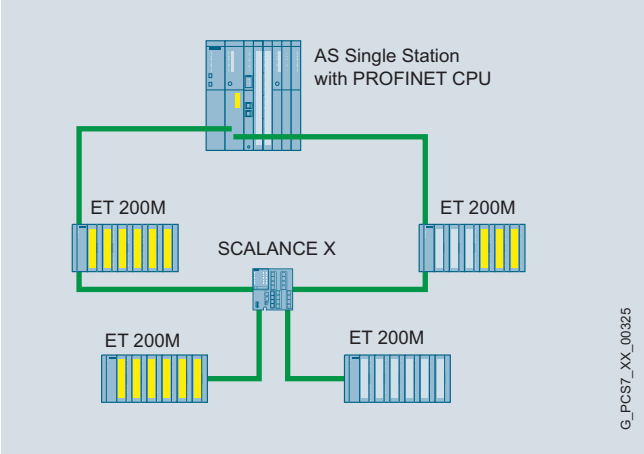

Safety-related PROFINET IO communication with Media redundancy

The maximum availability with minimum error handling times is achieved by the AS Redundancy Station (FH system) in conjunction with the system redundancy of the I/O devices. System redundancy refers to a type of PROFINET IO communication where each I/O device establishes a communication connection to each of the two CPUs of an AS Redundancy Station over the topological network. In contrast to the single-sided I/O device connection to only one CPU, failure of a CPU in this case does not automatically lead to failure of the connected I/O devices.

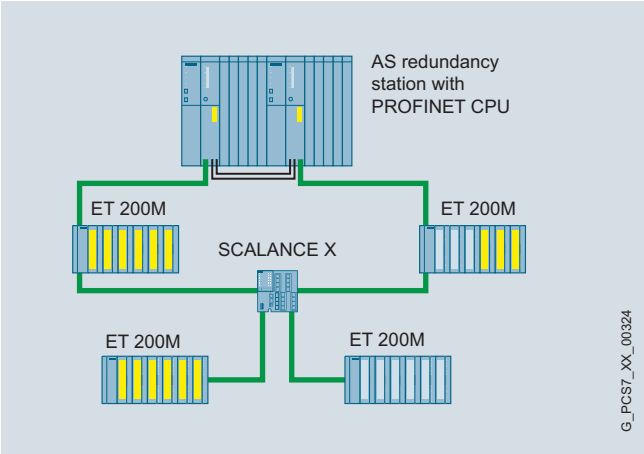

Safety-related PROFINET IO communication with system redundancy

Overview

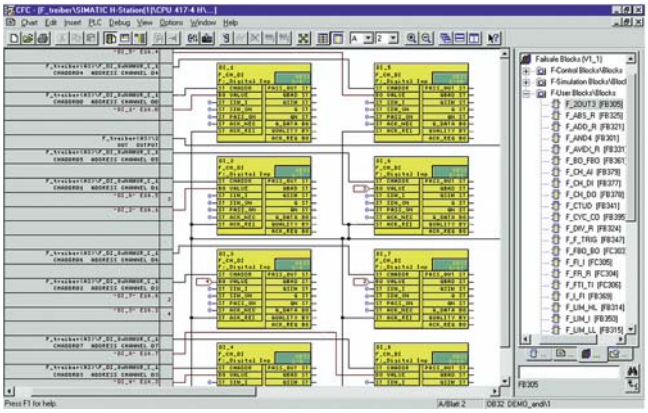

The SIMATIC S7 F Systems engineering tool for configuration of safety-related SIMATIC PCS 7 automation systems and safety-related F-modules from the ET 200 range is integrated in the SIMATIC Manager. SIMATIC S7 F Systems are based on pre-configured and inspectorate-approved blocks. The following functions are then available:

- Parameterization of CPU and F signal modules
- Creation of safety-related applications in the CFC

Design

Information on ordering and delivery

SIMATIC S7 F Systems is among the products for which the installation software is provided in the form of a software Media package. Software Media packages and product-specific software licenses are separate packages. They are not merged into a single delivery unit when supplied in package form.

The number of delivered software Media packages can be determined by the number of ordered items. You can find additional information under "Delivery form package" in the "Software Media and Logistics", "PCS 7 Software Packages" section of the ST PCS 7 catalog, page 1/2.

Configuration

SIMATIC S7 F Systems supports configuration using functions for:

- Comparison of safety-related F-programs
- Recognition of changes in the F-program using the checksum
- Separation of safety-related and standard functions.

Access to the F functions can be password-protected.

The F-block library integrated in SIMATIC S7 F Systems contains predefined function blocks for generation of safety-related applications with the CFC or the SIMATIC Safety Matrix based on it. The certified F-blocks are extremely robust and intercept programming errors such as division by zero or out-of-range values. They avoid the need for diverse programming tasks for detecting and reacting to errors.

Notes:

- Depending on the software requirements of the SIMATIC PCS 7 version, SIMATIC S7 F Systems can be operated under the operating systems Windows XP Professional 32-bit (SP2/SP3), Windows Server 2003 32-bit (SP2), Windows 7 Ultimate 32/64-bit or Windows Server 2008 R2 Standard 64-bit.
- The SIMATIC S7 F Systems RT license for processing safety-related user programs is already integrated in the "AS bundles" of the safety-related automation systems. The article number for ordering further licenses can be found in the section "Automation systems" under "Modular AS 410 systems", "Safety-related automation systems" and under "Complementary S7-400 systems".

Ordering data

	Article No.
SIMATIC S7 F Systems	
SIMATIC S7 F Systems V6.1 Programming and configuration environment for creating and using safety-related STEP 7 programs 2 languages (German, English), software class A, runs with Windows XP Professional 32-bit, Windows Server 2003 32-bit, Windows 7 Ultimate 32/64-bit or Windows Server 2008 R2 Standard 64-bit, floating license for 1 user	
• Delivery form package (without SIMATIC PCS 7 Software Media Package) License key USB stick and certificate of license, bundled with 1 × SIMATIC S7 F Systems Software Media Package per ordering position	**6ES7833-1CC02-0YA5**
• Delivery form online (without SIMATIC PCS 7 Software Media Package and SIMATIC S7 F Systems Software Media Package) License key download, online certificate of license Notes: E-mail address required; installation software also available separately as SIMATIC S7 F Systems Software Media Package.	**6ES7833-1CC02-0YH5**

	Article No.
SIMATIC S7 F Systems Software Media Package	
SIMATIC S7 F Systems Software Media Package V6.1 (incl. SP) Installation software without license, 2 languages (German, English), software class A, runs with Windows XP Professional 32-bit, Windows Server 2003 32-bit, Windows 7 Ultimate 32/64-bit or Windows Server 2008 R2 Standard 64-bit Note: Can only be used in conjunction with a valid license!	
• Delivery form package (without SIMATIC PCS 7 Software Media Package) Software on DVD	**6ES7833-4CC16-0YT8**
• Delivery form online (without SIMATIC PCS 7 Software Media Package) Software download Note: E-mail address required.	**6ES7833-4CC16-0YG8**
Upgrades for SIMATIC S7 F Systems See page 16/40. Note: With a SIMATIC S7 F Systems Upgrade from V5.x to V6.0/V6.1, the type of S7 F Systems license changes from single license to floating license.	

Options

S7 F ConfigurationPack

For the use of safety-related I/O modules of the ET 200 range, an S7 F ConfigurationPack is required for engineering. This is included in SIMATIC S7 F systems and is also available on the Internet for download:

http://support.automation.siemens.com/WW/view/en/15208817

Overview

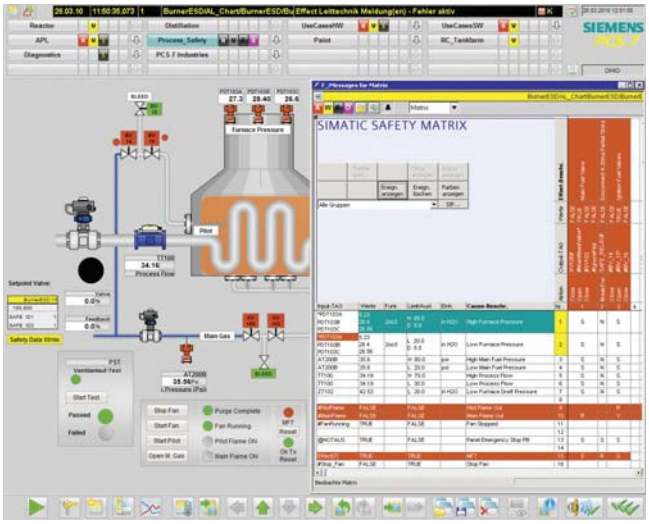

Process image of an operator station with Safety Matrix Viewer displayed

The SIMATIC Safety Matrix which can be used in addition to the CFC is an innovative safety lifecycle tool from Siemens that can be used not only for user-friendly configuration of safety applications, but also for their operation and service. The tool, which is based on the proven principle of a cause & effect matrix, is ideally suited to processes where defined statuses require specific safety reactions.

The SIMATIC Safety Matrix not only means that programming of the safety logic is significantly simpler and more convenient, but also much faster than in the conventional manner. During the risk analysis of a plant, the configuration engineer can assign exactly defined reactions (effects) to events (causes) which may occur during a process.

Benefits

Advantages of the Safety Matrix in the implementation and operation phase

Implementation phase

- Direct further processing of safety specification possible
- Simple programming using Cause&Effect method
- No programming knowledge required
- Preprocessing of input values
- Alarm generation and provision of diagnostic information for each individual cause and effect
- Prealarm for analog values
- Free color selection for alarms and messages
- Automatic generation of CFCs including driver blocks
- Matrix comparison on basis of created CFC charts
- Automatic version tracking
- integrated change tracking
- 1-to-1 printout of Cause&Effect matrix

Operating phase

- Complete integration in SIMATIC PCS 7
- All relevant information can be seen at a glance in the template
- Cause & Effect-dependent matrix and alarm display
- Tag display in the alarm
- Sequence of event display and saving
- First-up alarm display and saving
- Integral operating functions such as reset, override, and parameter modification
- Automatic saving of operating interventions for the safety life-cycle management
- Integral maintenance functions such as bypass and simulation
- Display of all relevant process values, also during maintenance
- Automatic version tracking
- Automatic documentation of modifications

Design

In the context of SIMATIC PCS 7, the following individual products are offered for the SIMATIC Safety Matrix:

Safety Matrix Tool

For the SIMATIC PCS 7 engineering system; for creating, configuring and compiling the Safety Matrix as well as for loading, operator control and monitoring of the safety-related CFC program.

The application covers the complete safety lifecycle from analysis through implementation up to operation and maintenance.

Safety Matrix Editor

For creating, configuring, testing and documenting the Safety Matrix logic on an external computer independent of the SIMATIC PCS 7 engineering system (can optionally be used together with the Safety Matrix Tool).

The application is focused on planning and configuring in the analysis and implementation phases.

The Safety Matrix Editor runs on a computer with Windows XP Professional 32-bit (from SP2), Windows Server 2003/2003 R2 32-bit (SP1 and higher), Windows 7 Ultimate 32/64-bit or Windows Server 2008 R2 Standard 64-bit operating systems. It also enables the Safety Matrix to be set up, configured, checked for plausibility and documented, independently of the engineering system of the SIMATIC PCS 7 process control system.

However, generation of the safety-related CFC program, compilation and downloading to the automation system and procedural test are only possible with the Safety Matrix Tool on the SIMATIC PCS 7 Engineering System.

Safety Matrix Viewer for SIMATIC PCS 7

For the SIMATIC PCS 7 operator system; for operator control and monitoring of the SIMATIC Safety Matrix in the operational phase.

With the Safety Matrix Viewer that can be installed on the SIMATIC PCS 7 Operator Station, single station or client version, the safety application can be operated and monitored simply and intuitively during operation.

Design (continued)

Information on ordering and delivery

The SIMATIC Safety Matrix is among the products for which the installation software is provided in the form of a software Media package. Software Media packages and product-specific software licenses are separate packages, which are not merged into a single delivery unit when supplied in package form.

The number of delivered software Media packages can be determined by the number of ordered items. You can find additional information under "Delivery form package" in the "Software Media and Logistics", "PCS 7 Software Packages" section of the ST PCS 7 catalog, page 1/2.

Function

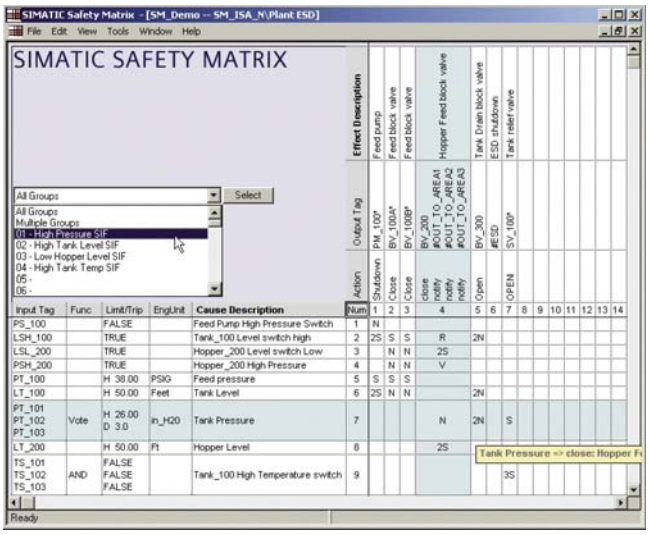

Safety Matrix: intersections define the linking of causes and effects

The matrix table is comparable with a spreadsheet program, and the configuration engineer first enters the possible process events (inputs) in the horizontal lines, and then configures their type and number, logical links, possible delays and interlocks, and any tolerable faults. The reactions (outputs) to a particular event are then defined in the vertical columns.

The events and reactions are linked by simply clicking the cell at the intersection of the row and column. Using these data, the SIMATIC Safety Matrix automatically generates complex, safety-related CFC programs. No special programming knowledge is required of the configuration engineer, and he can completely concentrate on the safety requirements of the plant.

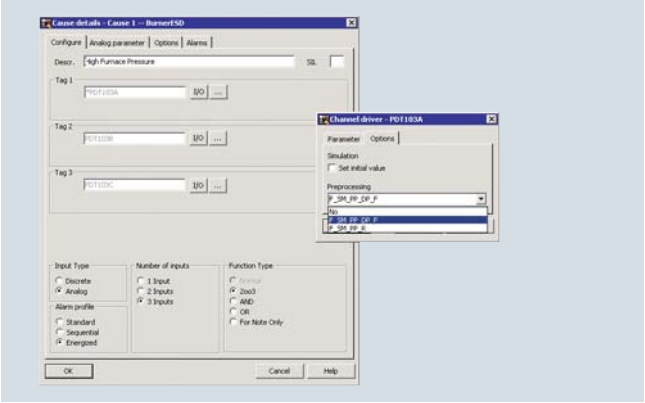

Input window for configuration of analog "causes" with process value preprocessing

Each input value can be combined with a freely configurable preprocessing if necessary without giving up the simulation option.

The alarm management is supported by collective alarms, alarm prioritization and individually adjustable acknowledgement.

In addition to the alarms derived from process values, alarms can also be generated and diagnostics information can be provided for each individual cause and effect. Priorities and response behavior can be defined in various profiles here. The color scheme for the alarms and messages can be adapted on a customer- or country-specific basis.

For the Safety Life-cycle Management, functions are integrated for the version management and for the documentation of program changes and operator interventions.

During plant operation, the operator has direct access to the relevant data with the viewer of the SIMATIC Safety Matrix. From the overall view it can change directly to cause or effect related detailed views and return from there. In the detailed views, alarm indications corresponding with the respective cause or effect can be called up.

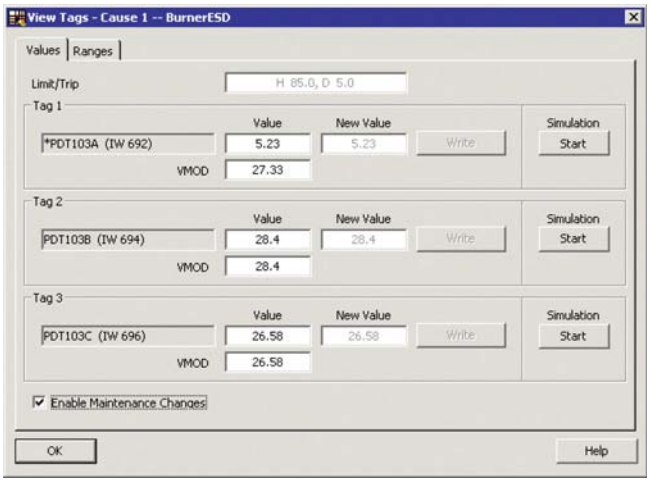

Tag display in online mode with process value, simulation value and active value

The signal status is indicated online in the Cause&Effect matrix. The process value, simulation value and active value are indicated on the tag display in each case.

The Safety Matrix viewer enables the operator to display and save first value messages as well as to record safety-relevant events. Changes in parameters are supported, as are bypass, reset and override functions.

Technical specifications

	Safety lifecycle support	Operating modes	Hardware requirements	Software requirements
Safety Matrix Tool	Complete lifecycle: Analysis phase Implementation phase Operation and maintenance phase	Offline, online	SIMATIC PCS 7 with safety-related automation systems (S7 F systems RT license integrated) Installation basis: SIMATIC PCS 7 Engineering Station	Alternative SIMATIC PCS 7 versions: • V7.0 SP3 and higher/V7.1 HF1 and higher • V8.0/V8.1/V8.2 Microsoft Windows operating system (depending on the software requirements of the SIMATIC PCS 7 version): • Windows XP Professional 32-bit (SP2/SP3) • Windows Server 2003 or 2003 R2, each 32-bit (SP1/SP2) • Windows 7 Ultimate 32/64-bit • Windows Server 2008 R2 Standard 64-bit For offline testing: S7-PLCSIM, depending on the installed S7 F System version
				S7 F Systems as of V5.2+SP1 with F-library "Failsafe Blocks" V1_2 or "S7 F Systems Lib" V1_3 (depending on S7 F Systems version); S7 F Lib V1_3 in combination with SIMATIC PCS 7 as of V6.1+SP2
Safety Matrix Editor	Analysis phase Partial implementation phase (planning and configuration of a Safety Matrix only, no program generation and commissioning)	Offline	PC, independent from SIMATIC PCS 7	Operating system alternatives: • Windows XP Professional 32-bit (SP2/SP3) • Windows Server 2003 or 2003 R2, each 32-bit (SP1/SP2) • Windows 7 Ultimate 32/64-bit • Windows Server 2008 R2 Standard 64-bit
Safety Matrix Viewer	Operating phase (control and monitoring)	Online	SIMATIC PCS 7 with safety-related automation systems (S7 F systems RT license integrated) Installation basis: SIMATIC PCS 7 Operator Station, single station or client version	Alternative SIMATIC PCS 7 versions: • V7.0 SP3 and higher/V7.1 HF1 and higher • V8.0/V8.1/V8.2 Microsoft Windows operating system (depending on the software requirements of the SIMATIC PCS 7 version): • Windows XP Professional 32-bit (SP2/SP3) • Windows Server 2003 or 2003 R2, each 32-bit (SP1/SP2) • Windows 7 Ultimate 32/64-bit • Windows Server 2008 R2 Standard 64-bit

System requirements

Ordering data

	Article No.
SIMATIC S7 Safety Matrix	
Safety Matrix Tool V6.2 Creation, configuration, compilation and loading of the Safety Matrix as well as operator control and monitoring in a SIMATIC PCS 7 environment 2 languages (German, English), software class A, runs with Windows XP Professional 32-bit, Windows Server 2003/2003 R2 Standard 32-bit, Windows 7 Ultimate 32/64-bit or Windows Server 2008 R2 Standard 64-bit, floating license for 1 user	
• Delivery form package (without SIMATIC PCS 7 Software Media Package) License key USB stick and certificate of license, packaged with 1 × SIMATIC S7 Safety Matrix Software Media Package per ordering position	**6ES7833-1SM02-0YA5**
• Delivery form online (without SIMATIC PCS 7 Software Media Package and SIMATIC S7 Safety Matrix Software Media Package) License key download and online certificate of license Notes: E-mail address required; installation software also available separately as SIMATIC S7 Safety Matrix Software Media Package.	**6ES7833-1SM02-0YH5**
Safety Matrix Editor V6.2 Creation, configuration, debugging and documentation of the Safety Matrix logic on an external computer without a SIMATIC PCS 7 / STEP 7 environment 2 languages (German, English), software class A, runs with Windows XP Professional 32-bit, Windows Server 2003/2003 R2 Standard 32-bit, Windows 7 Ultimate 32/64-bit or Windows Server 2008 R2 Standard 64-bit, single license for 1 installation	
• Delivery form package (without SIMATIC PCS 7 Software Media Package) License key USB stick and certificate of license, packaged with 1 × SIMATIC S7 Safety Matrix Software Media Package per ordering position	**6ES7833-1SM42-0YA5**
• Delivery form online (without SIMATIC PCS 7 Software Media Package and SIMATIC S7 Safety Matrix Software Media Package) License key download and online certificate of license Notes: E-mail address required; installation software also available separately as SIMATIC S7 Safety Matrix Software Media Package.	**6ES7833-1SM42-0YH5**

	Article No.
Safety Matrix Viewer V6.2 Operator control and monitoring of the SIMATIC Safety Matrix per OS single station/OS client Runtime software, 2 languages (German, English), software class A, runs with Windows XP Professional 32-bit, Windows Server 2003/2003 R2 Standard 32-bit, Windows 7 Ultimate 32/64-bit or Windows Server 2008 R2 Standard 64-bit, floating license for 1 user	
• Delivery form package (without SIMATIC PCS 7 Software Media Package) License key USB stick and certificate of license, bundled with 1 × SIMATIC S7 Safety Matrix Software Media Package per ordering position	**6ES7833-1SM62-0YA5**
• Delivery form online (without SIMATIC PCS 7 Software Media Package and SIMATIC S7 Safety Matrix Software Media Package) License key download and online certificate of license Note: E-mail address required; installation software also available separately as SIMATIC S7 Safety Matrix Software Media Package.	**6ES7833-1SM62-0YH5**
SIMATIC S7 Safety Matrix Software Media Package	
SIMATIC S7 Safety Matrix Software Media Package V6.2 (incl. SP) Installation software without license, 2 languages (English, German), software class A, runs with Windows XP Professional 32-bit, Windows Server 2003/2003 R2 Standard 32-bit, Windows 7 Ultimate 32/64-bit or Windows Server 2008 R2 Standard 64-bit Note: Can only be used in conjunction with a valid license.	
• Delivery form package (without SIMATIC PCS 7 Software Media Package) Software on DVD	**6ES7833-4SM26-0YT8**
• Delivery form online (without SIMATIC PCS 7 Software Media Package) Software download Note: E-mail address required!	**6ES7833-4SM26-0YG8**
Upgrades for Safety Matrix Tool and Safety Matrix Viewer See page 16/40	

IT Security

Overview

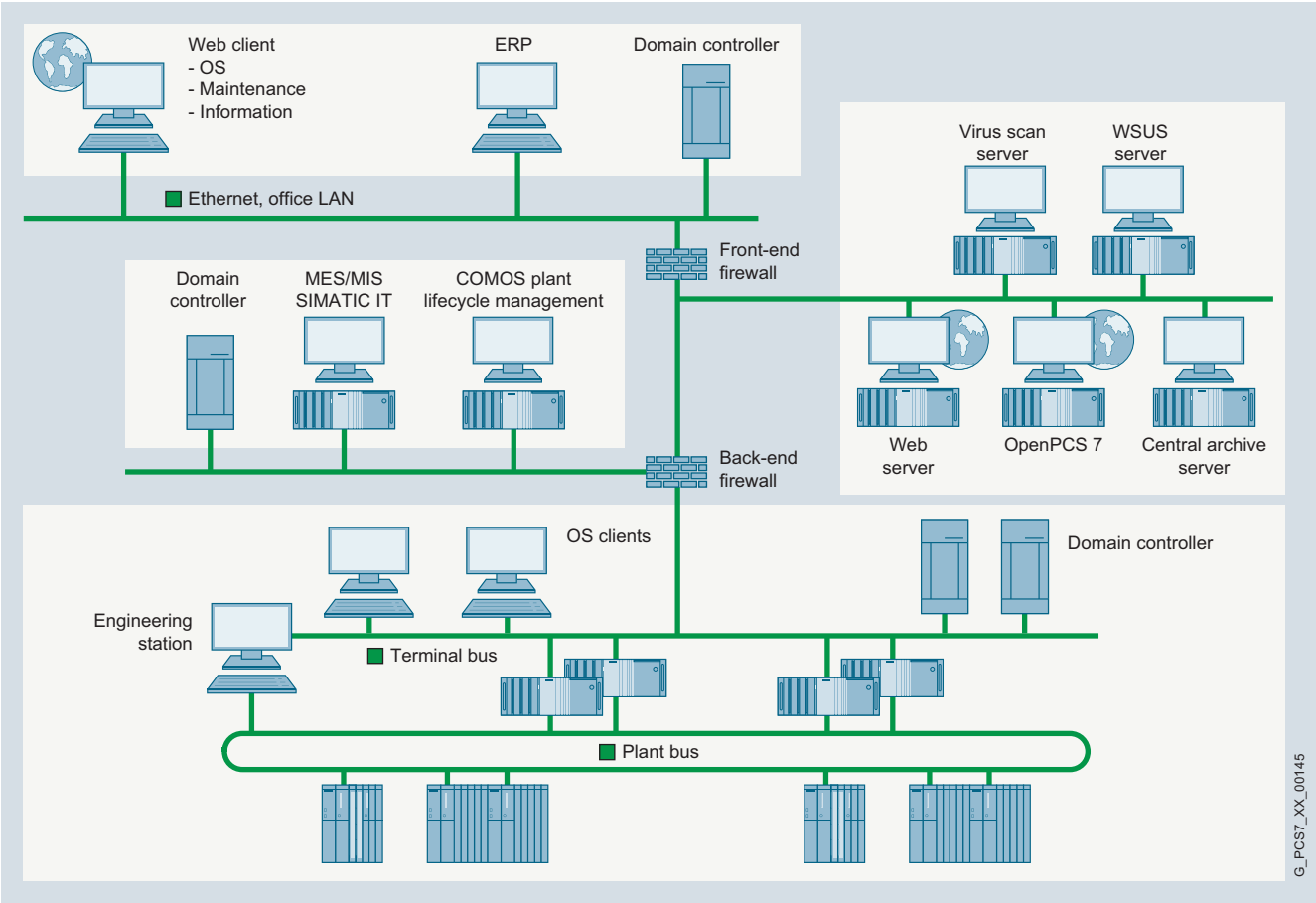

Example of a defense-in-depth security architecture

With advancing standardization, openness and networking, the security risks for process control systems have risen significantly. The danger potential arising from malicious programs such as computer viruses, worms and trojans or from access by unauthorized personnel ranges from network overloads or failures and theft of passwords and data to unauthorized interventions in the process automation. Apart from property damage, targeted sabotage can also have dangerous consequences for personnel and the environment.

With the security concept developed for SIMATIC PCS 7 you have comprehensive protection for your process control system against these various dangers. Siemens supports you with additional services as needed, including security assessment, security implementation and security management during operation (for details see section "Services", "Plant Security Services", page 17/18).

SIMATIC PCS 7 security concept

The SIMATIC PCS 7 security concept, which is described in the "Security concept PCS 7 & WinCC (Basic)" manual and in detail in other documents, provides far-reaching recommendations (best practices) for safeguarding process plants based on a defense-in-depth security architecture. It is not restricted to the use of individual security methods (e.g. encryption) or devices (e.g. firewalls).

The strengths of this holistic concept lie rather in the interaction of a host of security measures in the plant network:

- Formation of a network architecture with defense-in-depth security, combined with segmenting of the plant into security cells
- Network administration, assignment of IP addresses, and division into subnetworks
- Operation of plants in Windows domains (active directory)
- Administration of Windows operator authorizations and SIMATIC PCS 7 operator authorizations; integration of SIMATIC PCS 7 operator authorizations into the Windows administration
- Reliable control of time synchronization
- Management of security patches for Microsoft products
- Use of virus scanners, whitelisting software and firewalls
- Establishment and operation of support access and remote access (VPN, IPSec)

The manual "Security concept PCS 7 and WinCC - Basic document" is available on the Internet under "SIMATIC Manual Overview" - "Manuals SIMATIC PCS 7" - "Manuals for SIMATIC PCS 7 V8.2":

www.siemens.com/simatic-docu

Design

On the system side, SIMATIC PCS 7 supports implementation of guidelines and recommendations of the security concept by:

- Compatibility with current versions of the following virus scanners: Trend Micro OfficeScan, Symantec Norton AntiVirus and McAfee VirusScan
- Use of the local Windows firewall
- Automatic setting of safety-related parameters during setup, e.g. in DCOM, registry and Windows firewall
- Operator administration and authentication using SIMATIC Logon (for details, see "SIMATIC Logon" section)
- CP 1628 communication module with integrated security features (firewall, VPN) as an alternative to the Industrial Ethernet connection of SIMATIC PCS 7 Industrial Workstations
- Integration of the SCALANCE S602, S612, S623 and S627-2M industrial security modules
- Automation firewall
- Application whitelisting

CP 1628 communication module

CP 1628 communication module

The CP 1628 is a PCI Express card (PCIe x1) with its own microprocessor and integrated 2-port switch (2 x RJ45 connection, 10/100/1000 Mbps) for the connection of SIMATIC PCS 7 workstations to Industrial Ethernet.

In contrast to the comparable CP 1623, it has additional security features:

- Stateful Inspection Firewall for filtering communication based on their IP/port addresses
- Limiting bandwidth to avoid communication overload
- Secure communication through virtual private network (VPN) over IPsec tunnel
- Secure transmission of network analysis information to the network management system (SNMP V3)
- Secure transfer of the time (NTP V3)
- Monitoring through log files and their analysis using a syslog server

With the built-in security mechanisms, the CP 1628 can protect PCS 7 stations as well as their data communication within an automation network and remote access over the Internet. It enables secure access to individual stations or entire automation cells that are protected by security modules. Different security measures, such as firewall and VPN over IPsec tunnel, can also be combined.

For more information and technical specifications for the CP 1628 communication module, refer to the Catalog IK PI, section Industrial Ethernet, under System Utilities, System connection for PG/PC/IPC.

SCALANCE S industrial security modules

SCALANCE S industrial security modules

The SCALANCE S industrial security modules provide scalable security features, such as firewall, port filter, NAT, NAPT address translation and DHCP server (S602, S612, S623 and S627-2M) as well as authentication and data encryption with virtual private network (VPN) over IPsec tunnel (S612, S623 and S627-2M). They can be used, for example, to safeguard the cross-cell data exchange between components of automation and process control systems. Since they can be operated in bridge mode as well as router mode, they can therefore also be used directly at IP subnet boundaries.

The SCALANCE S industrial security modules have a rugged industrial design. For connection to Industrial Ethernet, they have 2 (S602 and S612) or 3 (S623 and S627-2M) 10/100/1000 Mbps ports (RJ45). In addition, the S627-2M is equipped with two slots for optional 2-port Media modules (electrical or optical; for ordering data, see SCALANCE X-300).

Design (continued)

Product versions:

- SCALANCE S602 industrial security modules
  - Uses the Stateful Inspection Firewall to protect network segments against unauthorized access
  - "Ghost mode" for protection of individual, even alternating, devices by dynamically taking over the IP address
- SCALANCE S612 industrial security modules
  - Uses the Stateful Inspection Firewall and VPN (Virtual Private Network) functionality to protect network segments against unauthorized access, data manipulation and espionage
  - Up to 128 IPsec tunnels can be operated simultaneously
- SCALANCE S623 industrial security modules
  - Uses the Stateful Inspection Firewall and VPN (Virtual Private Network) functionality to protect network segments against unauthorized access, data manipulation and espionage
  - Up to 128 IPsec tunnels can be operated simultaneously
  - Additional RJ45 DMZ port (yellow) for setting up a "Demilitarized Zone" (DMZ), which can terminate VPNs and is secured by firewalls to the red and green port
  - Redundant protection of automation cells by means of router and firewall redundancy as well as stand-by linking of the redundant device via the yellow port
- SCALANCE S627-2M industrial security modules
  - Uses the Stateful Inspection Firewall and VPN (Virtual Private Network) functionality to protect network segments against unauthorized access, data manipulation and espionage
  - Up to 128 IPsec tunnels can be operated simultaneously
  - Additional RJ45 DMZ port (yellow) for setting up a "Demilitarized Zone" (DMZ), which can terminate VPNs and is secured by firewalls to the red and green port
  - Redundant protection of automation cells by means of router and firewall redundancy as well as stand-by mode of the redundant device; status matching of the firewall by means of a synchronization cable between the yellow ports
  - Two additional slots for one 2-port Media module each (see SCALANCE X-300) for direct integration in ring structures and FO networks with two additional switched red or green ports per module
  - Bridging of longer cable runs; use of existing 2-wire cables by deploying MM992-2VD (variable distance) Media modules

Note:

Using the supplied Security Configurations Tool (SCT), it is easy to create and configure the security modules that can communicate securely with one another. You do not require any special IT knowledge.

The complete configuration can be saved on the optional swap medium C-PLUG (order separately) and transmitted to another security module. This permits easy and fast replacement of modules in the event of a fault.

For more information and technical specifications of the SCALANCE S security modules, see Catalog IK PI, section "Industrial Ethernet", "Industrial Ethernet Security".

Automation firewall

The automation firewall (see Catalog ST PCS 7 AO, "Architecture and Configuration" section) features Stateful Inspection packet filter, application layer firewall, VPN gateway functionality, URL filtering, Web proxy and intrusion prevention. Depending on the plant size, it can be used as a front and back firewall or in a three-homed configuration. It thus protects the access point to the production environment, e.g. from the office or intranet networks. The automation firewall is supplied preinstalled.

The value of the Automation Firewall is increased even further by integrated services, e.g.:

- Hotline support
- Replacement service
- Software Update Service

Additive services complete the offerings, for example, customized firewall solutions or integration of firewalls in customer systems.

Application whitelisting

Whitelisting protection mechanisms guarantee that only trustworthy applications and programs are executed on a station of the SIMATIC PCS 7 process control systems. They prevent the execution of non-permitted software and the modification of installed applications, thus providing additive protection against malware (malicious software). This protection can be implemented by means of additionally installed security applications, e.g. the McAfee Application Control V5.1.

Ordering data

	Article No.
SCALANCE S Industrial Security Modules	
SCALANCE S602 Industrial Security module with Stateful Inspection Firewall; 2 ports 10/100/1000 Mbps	**6GK5602-0BA10-2AA3**
SCALANCE S612 Industrial Security module with Stateful Inspection Firewall and VPN (Virtual Private Network); up to 128 simultaneous IPsec tunnels; 2 ports 10/100/1000 Mbps	**6GK5612-0BA10-2AA3**
SCALANCE S623 Industrial Security module with Stateful Inspection Firewall and VPN (Virtual Private Network); up to 128 simultaneous IPsec tunnels; 3 ports 10/100/1000 Mbps of which 1 is a DMZ port	**6GK5623-0BA10-2AA3**
SCALANCE S627-2M Up to 128 VPN tunnels simultaneously; additional RJ45 DMZ port; two additional slots for one 2-port Media module each	**6GK5627-2BA10-2AA3**
Communication module	
CP 1628 PCI Express x1 card for connecting to Industrial Ethernet (10/100/1000 Mbps), with 2-port switch (RJ45) and integrated security functions (firewall, VPN)	**6GK1162-8AA00**

	Article No.
Accessories	
C-PLUG Swap medium for simple replacement of devices in event of fault; for saving of configuration and application data, can be used in SIMATIC NET products with C-PLUG slot	**6GK1900-0AB00**
SITOP compact 24 V/0.6 A Single-phase power supply with wide-range input 85 to 264 V AC; 110 to 300 V DC; stabilized output voltage 24 V, rated output current value 0.6 A, slim design	**6EP1331-5BA00**
Automation firewall For automation firewall ordering data, see Catalog ST PCS 7 AO, "Architecture and Configuration" section	
Application whitelisting	
McAfee Application Control for fixed devices	**9AS1425-1AA11-1BA1**
McAfee Application Control for servers	**9AS1425-1AA11-1BC1**
Plant Security Services For Plant Security Services ordering data, see "Services" section, page 17/18	

Note:

For further components and accessories, especially cable material and connectors as well as tools and supplementary material for assembly, see "Communication - Industrial Ethernet - Passive network components" in the Sections "FastConnect" (page 10/41), "ITP cables and connectors" (page 10/45) and "Fiber-optic cables" (page 10/46) as well as Catalog IK PI.

More information

Siemens provides automation and drive products with industrial security functions that support the secure operation of plants or machines. They are an important component in a holistic industrial security concept. With this in mind, our products undergo continuous development. We therefore recommend that you keep yourself informed with respect to our product updates. Please find further information and newsletters on this subject at:
http://support.automation.siemens.com

To ensure the secure operation of a plant or machine it is also necessary to take suitable preventive action (e.g. cell protection concept) and to integrate the automation and drive components into a state-of-the-art holistic industrial security concept for the entire plant or machine. Any third-party products that may be in use must also be taken into account. Please find further information at:
www.siemens.com/industrialsecurity

Overview

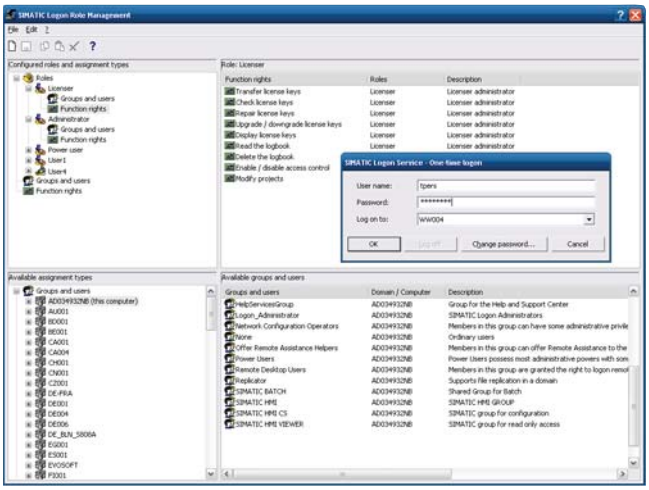

Centralized user administration with access control and electronic signature

SIMATIC Logon is a centralized user administration system with access control that also supports an electronic signature. It is in a position to work with applications in which roles have already been created or can be defined.

SIMATIC Logon facilitates the validation of plants in compliance with FDA 21 CFR Part 11.

Application

SIMATIC Logon V1.5 (including current Service Pack and Update) is released for the following systems:

- SIMATIC PCS 7 Process Control System V8.0, V8.1 and V8.2
- SIMATIC WinCC V7.0+SP3, V7.2, V7.3 and V7.4
- SIMATIC WinCC Runtime Professional Edition V13

Further application examples in the SIMATIC environment include:

- SIMATIC STEP 7 V5.5+SP4
- SIMATIC WinCC flexible from Version 2007 in conjunction with Logon Remote Access
- SIMATIC WinCC Runtime Advanced Edition V13 in conjunction with Logon Remote Access

SIMATIC Logon V1.5 can also easily be integrated in other applications based on a programming example (Development Kit).

Note:

The products listed here in the ordering data are not relevant for SIMATIC PCS 7 V8.2! Software and licenses of SIMATIC Logon V1.5 (including current Service Pack and Update) are already integrated in the system software of SIMATIC PCS 7 Process Control System V8.2.

Design

Logon devices

The following logon devices are supported by SIMATIC Logon:

- Keyboard
- Smart card reader (see "Industrial Workstation/IPC" chapter under "Expansion components", page 3/53)
- Logon devices which can be operated with a Microsoft device driver for the respective operating system, e.g. logon devices on a USB interface

Number of licenses

If SIMATIC Logon is not integrated on the system side, you require the same number of SIMATIC Logon licenses as the number of clients/single stations accessing the application for which the SIMATIC Logon is used as access protection.

SIMATIC Logon Upgrade

All previous versions can be upgraded to the current version.

Function

Access management

A logon dialog is opened to verify access authorization when applications managed with SIMATIC Logon are launched. The user receives their specific privileges after correctly entering the user name, password and domain. The user is rejected if the input is incorrect. Dialogs for logging off, changing user or password may be opened from the application.

Role management

The users, classified into groups at the operating system level, are associated by groups with the roles defined in the application and are assigned authorizations.

Event display

The Event Log Viewer records and displays the events for an application.

Electronic signature

The electronic signature means that operations cannot be performed until enabled by a previously authorized user. Authorization is assigned in the application by linking the users grouped at operating system level via the group with operations.

Note:

At the moment this function is implemented as a system function only on SIMATIC BATCH. The electronic signature can, however, also be flexibly implemented for specific applications.

Development Kit

The Development Kit uses an example to show the programmer how to embed SIMATIC Logon into a customer application.

Ordering data

	Article No.
For TIA applications only	
SIMATIC Logon V1.5 (including current Service Pack and Update) Single license for 1 installation, 7 languages (English, German, French, Italian, Spanish, Chinese, Japanese), software class A, runs with the following operating systems • Windows Vista (Business/Enterprise/Ultimate) up to SP2 32/64-bit • Windows 7 (Professional/Enterprise/Ultimate) up to SP1 32/64-bit • Windows 8.0 (Standard/Pro/Enterprise) 32/64-bit • Windows 8.1 (Standard/Pro/Enterprise) 32/64-bit • Windows 10 (Professional/Enterprise) 2015 LTSB 64-bit • Windows Server 2003 SP1/SP2 32-bit • Windows Server 2003 R2/2003 R2 SP2 32-bit • Windows Server 2008 (Standard/Enterprise/Datacenter) up to SP2 32/64-bit • Windows Server 2008 R2 (Standard/Enterprise/Datacenter) up to SP1 64-bit • Windows Server 2012 (Foundation/Essentials/Standard/Datacenter) 64-bit • Windows Server 2012 R2 (Essentials/Standard/Datacenter) 64-bit Delivery form: Software and electronic documentation on CD, license key on USB flash drive, certificate of license Note: This product is not for SIMATIC PCS 7 applications!	**6ES7658-7BX51-0YA0**
SIMATIC Logon Upgrade to V1.5 (incl. SP) (including current Service Pack and Update) Single license for 1 installation, 7 languages (English, German, French, Italian, Spanish, Chinese, Japanese), software class A, runs with the following operating systems • Windows Vista (Business/Enterprise/Ultimate) up to SP2 32/64-bit • Windows 7 (Professional/Enterprise/Ultimate) up to SP1 32/64-bit • Windows 8.0 (Standard/Pro/Enterprise) 32/64-bit • Windows 8.1 (Standard/Pro/Enterprise) 32/64-bit • Windows 10 (Professional/Enterprise) 2015 LTSB 64-bit • Windows Server 2003 SP1/SP2 32-bit • Windows Server 2003 R2/2003 R2 SP2 32-bit • Windows Server 2008 (Standard/Enterprise/Datacenter) up to SP2 32/64-bit • Windows Server 2008 R2 (Standard/Enterprise/Datacenter) up to SP1 64-bit • Windows Server 2012 (Foundation/Essentials/Standard/Datacenter) 64-bit • Windows Server 2012 R2 (Essentials/Standard/Datacenter) 64-bit Physical delivery: Software and electronic documentation on CD, license key on USB flash drive, certificate of license Note: This product is not for SIMATIC PCS 7 applications!	**6ES7658-7BX51-0YE0**

	Article No.
Supplementary components for SIMATIC Logon with SIMATIC WinCC flexible	
SIMATIC Logon Remote Access (3 clients) Remote access for 3 clients (configured with WinCC flexible Version 2007 and higher or WinCC TIA Portal), single license for 1 installation Physical delivery: License key USB flash drive, certificate of license	**6ES7658-7BA00-2YB0**
SIMATIC Logon Remote Access (10 clients) Remote access for 10 clients (configured with WinCC flexible Version 2007 and higher or WinCC TIA Portal), single license for 1 installation Physical delivery: License key USB flash drive, certificate of license	**6ES7658-7BB00-2YB0**

Notes

Update/Upgrade Packages

Overview

Engineering Upgrade Package AS/OS V8.0/V8.1 to V8.2

SIMATIC PCS 7 Engineering System with Engineering Software V8.0/V8.1 and Management Console V8.0/V8.1 can be upgraded to Version 8.2 using the SIMATIC PCS 7 Engineering Upgrade Package AS/OS.

The licenses included in the Engineering Upgrade Package AS/OS V8.0/V8.1 to V8.2 apply to the following software products of SIMATIC PCS 7:

- PCS 7 ES Single Station, PCS 7 AS Engineering Software, PCS 7 AS/OS Engineering Software
- PCS 7 Import-Export Assistant
- SIMATIC Version Cross Manager
- SIMATIC Version Trail
- PCS 7 SFC Visualization
- PCS 7 BCE
- PCS 7 Management Console
- Industrial Ethernet communication software for CP

SIMATIC PCS 7 ES Single Station SN ASIA Upgrade Package V8.1 to V8.2

The ASIA regional product variant "SIMATIC PCS 7 ES Single Station SN ASIA V8.1" that comes with communication software SOFTNET-REDCONNECT can be upgraded to V8.2 with the SIMATIC PCS 7 ES Single Station SN ASIA Upgrade Package specifically intended for this purpose.

SIMATIC Version Cross Manager Upgrade

The SIMATIC Version Cross Manager was last offered in Version 7.1, which is suitable for use in SIMATIC PCS 7 V7.1, V8.0 and V8.1. The further developed SIMATIC Version Cross Manager V8.2 is available for use in SIMATIC PCS 7 V8.2. The upgrade from SIMATIC Version Cross Manager V7.1 to V8.2 is a component of the Engineering Upgrade Package AS/OS V8.0/V8.1 to V8.2.

Advanced Engineering System Upgrade

The SIMATIC PCS 7 Advanced Engineering System V8.0 (incl. SP) can be used in SIMATIC PCS 7 V8.0, V8.1 and V8.2. Consequently there is no need to offer a SIMATIC PCS 7 Advanced Engineering System Upgrade Package for upgrading from V8.0/V8.1 to V8.2.

Ordering data

Engineering software

	Article No.
Engineering Software Upgrade from V8.0/8.1 to V8.2, based on the existing number of POs	
SIMATIC PCS 7 Engineering Upgrade Package AS/OS V8.0/8.1 to V8.2 Software class A, runs with Windows 7 Ultimate 32/64-bit or Windows Server 2008 R2 Standard 64-bit, floating license for 1 user	
5 languages (English, German, French, Italian, Spanish)	
With SIMATIC PCS 7 Software Media Package	
• Physical delivery License key on USB flash drive, certificate of license, bundled with 1 × SIMATIC PCS 7 Software Media Package per order item	**6ES7651-5AX28-0YE5**
• Online delivery License key download, online certificate of license, combined with SIMATIC PCS 7 Software Media Package (software download and online certificate of license) Note: Email address required!	**6ES7651-5AX28-0YK5**
ASIA, 2 languages (English, Chinese)	
With SIMATIC PCS 7 Software Media Package ASIA	
• Physical delivery ASIA license key on USB hardlock, certificate of license, bundled with 1 × SIMATIC PCS 7 Software Media Package ASIA per order item	**6ES7651-5AX28-0CE5**
SIMATIC PCS 7 ES Single Station SN ASIA Upgrade Package V8.1 to V8.2 (including SOFTNET REDCONNECT) 2 languages (English, Chinese), software class A, runs with Windows 7 Ultimate 32/64-bit or Windows Server 2008 R2 Standard 64-bit, single license for 1 installation	**6ES7651-5AA28-6CE0**
No SIMATIC PCS 7 Software Media Package ASIA	
• Physical delivery ASIA license key on USB hardlock, certificate of license	
SIMATIC Version Cross Manager Upgrade from V7.1 to V8.2 6 languages (English, German, French, Italian, Spanish, Chinese), software class A, runs with Windows 7 Professional/Ultimate 32/64-bit or Windows Server 2008 R2 Standard 64-bit, floating license for 1 user	
No SIMATIC PCS 7 Software Media Package	
• Physical delivery License key on USB flash drive, certificate of license and TIA Engineering Toolset CD	**6ES7658-1CX28-2YE5**
• Online delivery License key download, online certificate of license Note: Email address required!	**6ES7658-1CX28-2YK5**

Overview

Upgrades combined in packages enable upgrading of existing Operator Systems V8.0/V8.1 to V8.2 with consideration of the number of existing process objects and archive tags.

OS software Upgrades V8.0/V8.1 to V8.2

The following Upgrade Packages for upgrading to V8.2 will be offered for SIMATIC PCS 7 Operator Stations with OS Software V8.0/8.1 as a matter of course:

- SIMATIC PCS 7 OS Single Station Upgrade Package
- SIMATIC PCS 7 OS Server Upgrade Package
- SIMATIC PCS 7 OS Client/SFC Visualization Upgrade Package

The ASIA product variants "SIMATIC PCS 7 OS Single Station SN ASIA V8.1" and "SIMATIC PCS 7 OS Server SN ASIA V8.1" that come with communication software SOFTNET-REDCONNECT can be upgraded to V8.2 with specific upgrade packages:

- SIMATIC PCS 7 OS Single Station SN ASIA Upgrade Package
- SIMATIC PCS 7 OS Server SN ASIA Upgrade Package

Two Upgrade Packages of type OS Single Station or OS Server are required in each case for redundant SIMATIC PCS 7 Operator Stations.

In addition to the licenses for the PCS 7 OS Software Single Station or Server, the Upgrade Packages for OS Single Station and OS Server include upgrade licenses for:

- SIMATIC PCS 7 SFC Visualization
- SIMATIC PCS 7 BCE
- Industrial Ethernet communication software for CP
- SIMATIC PCS 7 OpenPCS 7 and SIMATIC PCS 7 OpenPCS 7/ OS Client

The upgrade license for SIMATIC PCS 7 SFC Visualization is also part of the Upgrade Package SIMATIC PCS 7 OS Client/ SFC Visualization.

The upgrade licenses for Process Historian and Information Server are also embedded in the SIMATIC PCS 7 OS Server Upgrade Package. With a SIMATIC PCS 7 OS Server Upgrade Package, only one SIMATIC PCS 7 OS Server or one SIMATIC PCS 7 Process Historian (with/without Information Server) can be upgraded (for details see table in section "Upgrades for Process Historian and Information Server", page 16/5).

Upgrade of the Web Option for OS

Using the SIMATIC PCS 7 OS Web Server Upgrade Package, you can upgrade the SIMATIC PCS 7 Web Server, SIMATIC PCS 7 Web Diagnostics Server and SIMATIC PCS 7 Web Diagnostics Clients from V8.0 or V8.1 to V8.2.

Ordering data

OS software

	Article No.
OS Software Upgrade from V8.0/ 8.1 to V8.2, based on the existing number of POs	
SIMATIC PCS 7 OS Single Station Upgrade Package V8.0/8.1 to V8.2 For OS Single Station, software class A, runs with Windows 7 Ultimate 32/64-bit or Windows 10 Enterprise 2015 LTSB 64-bit, single license for 1 installation	
5 languages (English, German, French, Italian, Spanish)	
With SIMATIC PCS 7 Software Media Package	
• Physical delivery License key on USB flash drive, certificate of license, bundled with 1 × SIMATIC PCS 7 Software Media Package per order item	**6ES7652-5AX28-0YE0**
• Online delivery License key download, online certificate of license, combined with SIMATIC PCS 7 Software Media Package (software download and online certificate of license) Note: Email address required!	**6ES7652-5AX28-0YK0**
ASIA, 2 languages (English, Chinese)	
With SIMATIC PCS 7 Software Media Package ASIA	
• Physical delivery ASIA license key on USB hardlock, certificate of license, bundled with 1 × SIMATIC PCS 7 Software Media Package ASIA per order item	**6ES7652-5AX28-0CE0**

	Article No.
SIMATIC PCS 7 OS Single Station SN ASIA Upgrade Package V8.1 to V8.2 (including SOFTNET REDCONNECT) For OS Single Station	
2 languages (English, Chinese), software class A, runs with Windows 7 Ultimate 32/64-bit or Windows 10 Enterprise 2015 LTSB 64-bit, single license for 1 installation	
No SIMATIC PCS 7 Software Media Package ASIA	
• Physical delivery ASIA license key on USB hardlock, certificate of license	**6ES7658-2AA28-6CE0**

Upgrades for Operator System incl. OpenPCS 7 and Web Option for OS

Ordering data	Article No.
SIMATIC PCS 7 OS Server Upgrade Package V8.0/8.1 to V8.2 For OS Server Software class A, runs with Windows Server 2008 R2 Standard 64-bit or Windows Server 2012 R2 Standard 64-bit, single license for 1 installation With SIMATIC PCS 7 Software Media Package 5 languages (English, German, French, Italian, Spanish) With SIMATIC PCS 7 Software Media Package	
• Physical delivery License key on USB flash drive, certificate of license, bundled with 1 × SIMATIC PCS 7 Software Media Package per order item	**6ES7652-5BX28-0YE0**
• Online delivery License key download, online certificate of license, combined with SIMATIC PCS 7 Software Media Package (software download and online certificate of license) Note: Email address required!	**6ES7652-5BX28-0YK0**
ASIA, 2 languages (English, Chinese) With SIMATIC PCS 7 Software Media Package ASIA	
• Physical delivery ASIA license key on USB hardlock, certificate of license, bundled with 1 × SIMATIC PCS 7 Software Media Package ASIA per order item	**6ES7652-5BX28-0CE0**
SIMATIC PCS 7 OS Server SN ASIA Upgrade Package V8.1 to V8.2 For OS Server 2 languages (English, Chinese), software class A, runs with Windows Server 2008 R2 Standard 64-bit or Windows Server 2012 R2 Standard 64-bit, single license for 1 installation No SIMATIC PCS 7 Software Media Package ASIA	
• Physical delivery ASIA license key on USB hardlock, certificate of license	**6ES7658-2BA28-6CE0**

	Article No.
SIMATIC PCS 7 OS Client/ SFC Visualization Upgrade Package V8.0/8.1 to V8.2 Software class A, runs with Windows 7 Ultimate 32/64-bit, Windows 10 Enterprise 2015 LTSB 64-bit, Windows Server 2008 R2 Standard 64-bit or Windows Server 2012 R2 Standard 64-bit, floating license for 1 user 5 languages (English, German, French, Italian, Spanish) No SIMATIC PCS 7 Software Media Package	
• Physical delivery License key on USB flash drive, certificate of license	**6ES7652-5CX28-0YF5**
• Online delivery License key download, online certificate of license Note: Email address required!	**6ES7652-5CX28-0YK5**
ASIA, 2 languages (English, Chinese) No SIMATIC PCS 7 Software Media Package ASIA	
• Physical delivery ASIA license key on USB hardlock, certificate of license	**6ES7652-5CX28-0CF5**

Web Option for OS

PCS 7 Web Server Upgrade from V8.0/8.1 to V8.2	
SIMATIC PCS 7 Web Server Upgrade Package V8.0/8.1 to V8.2 For SIMATIC PCS 7 Web Server, SIMATIC PCS 7 Web Diagnostics Server, SIMATIC PCS 7 Web Diagnostics client 6 languages (English, German, French, Italian, Spanish, Chinese), software class A, runs with Windows Server 2008 R2 Standard 64-bit, Windows Server 2012 R2 Standard 64-bit (Web server/Web diagnostics server) or Windows 7 Ultimate 32/64-bit, Windows 10 Enterprise 2015 LTSB 64-bit (Web diagnostics client), single license for 1 installation No SIMATIC PCS 7 Software Media Package	
• Physical delivery License key on USB flash drive, certificate of license	**6ES7652-5DX28-0YF0**
• Online delivery License key download, online certificate of license Note: Email address required!	**6ES7652-5DX28-0YK0**

Overview

The upgrade licenses for Process Historian and Information Server are embedded in the SIMATIC PCS 7 OS Server Upgrade Package V8.0/V8.1 to V8.2. The following table shows the number of SIMATIC PCS 7 OS Server Upgrade Packages required for upgrading the various types of station.

Upgrade Package	Single Server				Server Redundancy	
	OS Server	Process Historian plus Information Server	Information Server	Process Historian	OS Server	Process Historian
PCS 7 OS Server Upgrade Package V8.0/V8.1 to V8.2	1	1	–	1	2	2

A separate upgrade package is not required for a separate Information Server.

Maintenance Station Upgrade Package

With the SIMATIC PCS 7 Maintenance Station Upgrade Package, you can upgrade the SIMATIC PCS 7 Maintenance Station Runtime Basic Package as well as the SIMATIC PCS 7 Maintenance Station Engineering from V8.0 or V8.1 to V8.2. The SNMP OPC server license is also taken into account for the upgrade.

The cumulative SIMATIC PCS 7 Maintenance Station Runtime licenses are independent of the version. Existing asset TAGs of these licenses are therefore completely available following the upgrade.

Ordering data

Ordering data	Article No.
PCS 7 Maintenance Station Upgrade from V8.0/8.1 to V8.2	
SIMATIC PCS 7 Maintenance Station Upgrade Package V8.0/8.1 to V8.2 For installation on SIMATIC PCS 7 BOX, single station or server 6 languages (English, German, French, Italian, Spanish, Chinese), software class A, runs with Windows 7 Ultimate 32/64-bit, Windows Server 2008 R2 Standard 64-bit or Windows Server 2012 R2 Standard 64-bit, single license for 1 installation No SIMATIC PCS 7 Software Media Package	
• Physical delivery License key on USB flash drive, certificate of license	**6ES7652-5FX28-0YF0**
• Online delivery License key download, online certificate of license Note: Email address required!	**6ES7652-5FX28-0YK0**

Upgrades for SIMATIC BATCH and SIMATIC Route Control

Overview

SIMATIC BATCH Upgrade Packages

Upgrades combined in packages enable upgrading of existing SIMATIC BATCH systems from V8.0 or V8.1 to V8.2:

SIMATIC BATCH Server Upgrade Package

With upgrade licenses for:

- SIMATIC BATCH Server
- SIMATIC BATCH Basic
- SIMATIC BATCH Single Station User
- SIMATIC BATCH Single Station System
- SIMATIC BATCH API
- PCS 7 BCE
- Industrial Ethernet communication software for CP

SIMATIC BATCH Client Upgrade Package

With upgrade licenses for:

- SIMATIC BATCH Client
- SIMATIC BATCH Recipe System

The cumulative SIMATIC BATCH UNITs are independent of the version. Existing UNITs are completely available following the upgrade.

Overview

SIMATIC Route Control Upgrade Packages

With SIMATIC Route Control Upgrade Packages you can upgrade Route Control Engineering, Route Control Server and Route Control Center from V8.0 or V8.1 to V8.2. The number of existing "Routes" (quantity option for number of simultaneous material transports) is fully available again after the upgrade.

SIMATIC Route Control Center Upgrades, which are only available only as an online delivery, allow separate upgrading of the Route Control Center software from V8.0 or V8.1 to V8.2.

Ordering data

Ordering data	Article No.
SIMATIC BATCH Upgrade from V8.0/8.1 to V8.2	
SIMATIC BATCH Server Upgrade Package V8.0/8.1 to V8.2 6 languages (English, German, French, Italian, Spanish, Chinese), software class A, runs with Windows 7 Ultimate 64-bit, Windows Server 2008 R2 Standard 64-bit or Windows Server 2012 R2 Standard 64-bit, single license for 1 installation	
No SIMATIC PCS 7 Software Media Package	
• Physical delivery License key on USB flash drive, certificate of license	**6ES7657-5XX28-0YF0**
• Online delivery License key download, online certificate of license Note: Email address required!	**6ES7657-5XX28-0YK0**
SIMATIC BATCH Client Upgrade Package V8.0/8.1 to V8.2 6 languages (English, German, French, Italian, Spanish, Chinese), software class A, runs with Windows 7 Ultimate 32/64-bit, Windows 10 Enterprise 2015 LTSB 64-bit, Windows Server 2008 R2 Standard 64-bit or Windows Server 2012 R2 Standard 64-bit, floating license for 1 user	
No SIMATIC PCS 7 Software Media Package	
• Physical delivery License key on USB flash drive, certificate of license	**6ES7657-5XX28-0YF5**
• Online delivery License key download, online certificate of license Note: Email address required!	**6ES7657-5XX28-0YK5**

Ordering data

Ordering data	Article No.
SIMATIC Route Control Upgrade from V8.0/8.1 to V8.2	
SIMATIC Route Control Upgrade Package V8.0/8.1 to V8.2 6 languages (English, German, French, Italian, Spanish, Chinese), software class A, runs with Windows 7 Ultimate 32/64-bit, Windows Server 2008 R2 Standard 64-bit or Windows Server 2012 R2 Standard 64-bit, single license for 1 installation	
No SIMATIC PCS 7 Software Media Package	
• Physical delivery License key on USB flash drive, certificate of license	**6ES7652-5XX28-0YF0**
• Online delivery License key download, online certificate of license Note: Email address required!	**6ES7652-5XX28-0YK0**
SIMATIC Route Control Center Upgrade V8.0/8.1 to V8.2 6 languages (English, German, French, Italian, Spanish, Chinese), software class A, runs with Windows 7 Ultimate 32/64-bit, Windows 10 Enterprise 2015 LTSB 64-bit, Windows Server 2008 R2 Standard 64-bit or Windows Server 2012 R2 Standard 64-bit, floating license for 1 user	
No SIMATIC PCS 7 Software Media Package	
• Online delivery License key download, online certificate of license Note: Email address required!	**6ES7658-7EX28-0YK0**

Overview

Engineering Upgrade Package V7.1 to V8.2

SIMATIC PCS 7 Engineering System with Engineering Software V7.1 can be upgraded in two steps, initially to V8.0 and then to V8.2. Depending on the starting point, one of the two following versions of the SIMATIC PCS 7 Engineering Upgrade Package can be used:

- SIMATIC PCS 7 Engineering Upgrade Package AS/OS, unlimited POs
  (without OS Runtime license for productive operation), for classic engineering station without limitation of engineering.
- SIMATIC PCS 7 Engineering Upgrade Package AS/OS, 250 to 2 000 POs
  (with OS Runtime license for productive operation), for combined engineering/operator station in small applications

Any existing OS Runtime license is converted to a cumulative "Count Relevant License" during the upgrade from V7.1 to V8.0. The number of OS Runtime POs is retained.

The licenses included in the Engineering Upgrade Package V7.1 to V8.2 apply to the following software products:

- PCS 7 Engineering AS, OS, AS/OS (250 to 2 000 POs or unlimited POs)
- PCS 7 Import-Export Assistent
- SIMATIC Version Cross Manager
- SIMATIC Version Trail
- PCS 7 SFC Visualization
- PCS 7 BCE
- PCS 7 Management Console
- Industrial Ethernet communication software for CP

Advanced Engineering System Upgrade

The SIMATIC PCS 7 Advanced Engineering System Upgrade is offered as a separate product in addition to the SIMATIC PCS 7 Engineering Upgrade Package.

Since the SIMATIC PCS 7 Advanced Engineering System V8.0 (incl. service pack) can be used in SIMATIC PCS 7 V8.0 as well as in SIMATIC PCS 7 V8.1 and V8.2, this upgrade is only available for the upgrade from V7.1 to V8.0 (incl. SP1).

Ordering data

Engineering software

	Article No.
Engineering Software Upgrade from V7.1 to V8.2, based on the existing number of POs	
SIMATIC PCS 7 Engineering Upgrade Package AS/OS (250 to 2 000 POs) V7.1 to V8.2 Software class A, runs with Windows 7 Ultimate 32/64-bit or Windows Server 2008 R2 Standard 64-bit, floating license for 1 user 5 languages (English, German, French, Italian, Spanish) comprising: • SIMATIC PCS 7 Engineering Upgrade Package AS/OS (250 to 2 000 POs) V7.1 to V8.0 • SIMATIC PCS 7 Engineering Upgrade Package AS/OS V8.0/8.1 to V8.2 • SIMATIC PCS 7 OS Single Station Upgrade Package V8.0/8.1 to V8.2 • SIMATIC PCS 7 Software Media Package V8.2	
- Delivery form package License key USB stick, certificate of license, bundled with 1 × SIMATIC PCS 7 Software Media Package per order item	**6ES7651-7AC28-0YE5**
- Online delivery License key download, online certificate of license, combined with SIMATIC PCS 7 Software Media Package (software download and online certificate of license) Note: E-mail address required!	**6ES7651-7AC28-0YK5**

	Article No.
ASIA, 2 languages (English, Chinese), comprising: • SIMATIC PCS 7 Engineering Upgrade Package AS/OS ASIA (250 to 2 000 POs) V7.1 to V8.0 • SIMATIC PCS 7 Engineering Upgrade Package AS/OS ASIA V8.0/8.1 to V8.2 • SIMATIC PCS 7 OS Single Station Upgrade Package ASIA V8.0/8.1 to V8.2 • SIMATIC PCS 7 Software Media Package ASIA V8.2 - Delivery form package ASIA license key USB hardlock, certificate of license, bundled with 1 × SIMATIC PCS 7 Software Media Package ASIA per order item	**6ES7651-7AC28-0CE5**

Upgrades for Engineering System and Management Console

Ordering data	Article No.
SIMATIC PCS 7 Engineering Upgrade Package AS/OS (unlimited POs) V7.1 to V8.2 Software class A, runs with Windows 7 Ultimate 32/64-bit or Windows Server 2008 R2 Standard 64-bit, floating license für 1 user	
5 languages (English, German, French, Italian, Spanish)	
comprising: • SIMATIC PCS 7 Engineering Upgrade Package AS/OS (unlimited POs) V7.1 to V8.0 • SIMATIC PCS 7 Engineering Upgrade Package AS/OS V8.0/8.1 to V8.2 • SIMATIC PCS 7 Software Media Package V8.2	
- Delivery form package License key USB stick, certificate of license, bundled with 1 × SIMATIC PCS 7 Software Media Package per order item	**6ES7651-7AF28-0YE5**
- Online delivery License key download, online certificate of license, combined with SIMATIC PCS 7 Software Media Package (software download and online certificate of license) Note: E-mail address required!	**6ES7651-7AF28-0YK5**

	Article No.
ASIA, R2 languages (English, Chinese),	
comprising: • SIMATIC PCS 7 Engineering Upgrade Package AS/OS ASIA (unlimited POs) V7.1 to V8.0 • SIMATIC PCS 7 Engineering Upgrade Package AS/OS ASIA V8.0/8.1 to V8.2 • SIMATIC PCS 7 Software Media Package ASIA V8.2	
- Delivery form package ASIA license key USB hardlock, certificate of license, bundled with 1 × SIMATIC PCS 7 Software Media Package ASIA per order item	**6ES7651-7AF28-0CE5**

Overview

Upgrades combined in packages enable upgrading of existing Operator Systems V7.1 to V8.2 with consideration of the number of existing process objects and archive variables.

SIMATIC PCS 7 Operator Stations with OS Software V7.1 can be upgraded in two steps, initially to V8.0 and then to V8.2. Depending on the starting point, the following Upgrade Packages are available:

- SIMATIC PCS 7 OS Single Station Upgrade Package
- SIMATIC PCS 7 OS Single Station Redundancy Upgrade Package
- SIMATIC PCS 7 OS Server Upgrade Package
- SIMATIC PCS 7 OS Server Redundancy Upgrade Package
- SIMATIC PCS 7 OS Client/SFC Visualization Upgrade Package

The OS Runtime licenses are converted to cumulative "Count Relevant Licenses" during the upgrade. The number of existing OS Runtime POs is retained.

In addition to the licenses for the PCS 7 OS Software Single Station or Server, the Upgrade Packages for OS Single Station and OS Server include upgrade licenses for:

- SIMATIC PCS 7 SFC Visualization
- SIMATIC PCS 7 BCE
- Industrial Ethernet communication software for CP
- SIMATIC PCS 7 OpenPCS 7 and SIMATIC PCS 7 OpenPCS 7/ OS Client

The upgrade license for SIMATIC PCS 7 SFC Visualization is also part of the Upgrade Package SIMATIC PCS 7 OS Client/SFC Visualization.

The upgrade licenses for Process Historian and Information Server are also embedded in SIMATIC PCS 7 OS Server Upgrade Package V8.0/8.1 to V8.2 (part of SIMATIC PCS 7 OS Server Upgrade Package V7.1 to V8.2). With a SIMATIC PCS 7 OS Server Upgrade Package V8.0/8.1 to V8.2, only one SIMATIC PCS 7 OS Server or one SIMATIC PCS 7 Process Historian (with/ without Information Server) can be upgraded.

Upgrade of the Web Option for OS

Using the SIMATIC PCS 7 OS Web Server Upgrade Package, you can upgrade the SIMATIC PCS 7 Web server, SIMATIC PCS 7 Web diagnostics server and SIMATIC PCS 7 Web diagnostics clients from V7.1 to V8.2. It is first necessary to upgrade to V8.0 and subsequently to V8.2.

Ordering data

OS software

	Article No.
OS Software Upgrade from V7.1 to V8.2, based on the existing number of POs	
SIMATIC PCS 7 OS Single Station Upgrade Package V7.1 to V8.2 for OS Single Station, software class A, runs with Windows 7 Ultimate 32/ 64-bit or Windows 10 Enterprise 2015 LTSB 64-bit, single license for 1 installation 5 languages (English, German, French, Italian, Spanish), comprising: • SIMATIC PCS 7 OS Single Station Upgrade Package V7.1 to V8.0 • SIMATIC PCS 7 OS Single Station Upgrade Package V8.0/8.1 to V8.2 • SIMATIC PCS 7 Software Media Package V8.2	
- Delivery form package License key USB stick, certificate of license, bundled with 1 × SIMATIC PCS 7 Software Media Package per order item	**6ES7652-8AX28-0YE0**
- Online delivery License key download, online certificate of license, combined with SIMATIC PCS 7 Software Media Package (software download and online certificate of license) Note: E-mail address required!	**6ES7652-8AX28-0YK0**

	Article No.
ASIA, 2 languages (English, Chinese), comprising: • SIMATIC PCS 7 OS Single Station Upgrade Package ASIA V7.1 to V8.0 • SIMATIC PCS 7 OS Single Station Upgrade Package ASIA V8.0/8.1 to V8.2 • SIMATIC PCS 7 Software Media Package ASIA V8.2 - Delivery form package ASIA license key USB hardlock, certificate of license, bundled with 1 × SIMATIC PCS 7 Software Media Package ASIA per order item	**6ES7652-8AX28-0CE0**

Upgrades for Operator System incl. OpenPCS 7 and Web Option for OS

Ordering data	Article No.
SIMATIC PCS 7 OS Single Station Redundancy Upgrade Package V7.1 to V8.2 for redundant OS Single Stations, software class A, runs with Windows 7 Ultimate 32/64-bit or Windows 10 Enterprise 2015 LTSB 64-bit, single license for 2 installations	
5 languages (English, German, French, Italian, Spanish),	
comprising: • SIMATIC PCS 7 OS Single Station Redundancy Upgrade Package V7.1 to V8.0 • 2 x SIMATIC PCS 7 OS Single Station Upgrade Package V8.0/8.1 to V8.2 • SIMATIC PCS 7 Software Media Package V8.2	
- Delivery form package License key USB stick, certificate of license, bundled with 1 × SIMATIC PCS 7 Software Media Package per order item	**6ES7652-3AX28-2YE0**
- Online delivery License key Ddownload, online certificate of license, combined with SIMATIC PCS 7 Software Media Package (software download and online certificate of license) Note: E-mail address required!	**6ES7652-3AX28-2YK0**
ASIA, 2 languages (English, Chinese),	
comprising: • SIMATIC PCS 7 OS Single Station Redundancy Upgrade Package ASIA V7.1 to V8.0 • 2 x SIMATIC PCS 7 OS Single Station Upgrade Package ASIA V8.0/8.1 to V8.2 • SIMATIC PCS 7 Software Media Package ASIA V8.2	
- Delivery form package ASIA license key USB hardlock, certificate of license, bundled with 1 × SIMATIC PCS 7 Software Media Package ASIA per order item	**6ES7652-3AX28-2CE0**

	Article No.
SIMATIC PCS 7 OS Server Upgrade Package V7.1 to V8.2 for OS Server, software class A, runs with Windows Server 2008 R2 Standard 64-bit or Windows Server 2012 R2 Standard 64-bit, single license für 1 installation	
5 languages (English, German, French, Italian, Spanish),	
comprising: • SIMATIC PCS 7 OS Server Upgrade Package V7.1 to V8.0 • SIMATIC PCS 7 OS Server Upgrade Package V8.0/8.1 to V8.2 • SIMATIC PCS 7 Software Media Package V8.2	
- Delivery form package License key USB stick, certificate of license, bundled with 1 × SIMATIC PCS 7 Software Media Package per order item	**6ES7652-8BX28-0YE0**
- Online delivery License key download, online certificate of license, combined with SIMATIC PCS 7 Software Media Package (software download and online certificate of license) Note: E-mail address required!	**6ES7652-8BX28-0YK0**
ASIA, 2 languages (English, Chinese),	
comprising: • SIMATIC PCS 7 OS Server Upgrade Package ASIA V7.1 to V8.0 • SIMATIC PCS 7 OS Server Upgrade Package ASIA V8.0/8.1 to V8.2 • SIMATIC PCS 7 Software Media Package ASIA V8.2	
• Delivery form package ASIA license key USB hardlock, certificate of license, bundled with 1 × SIMATIC PCS 7 Software Media Package ASIA per order item	**6ES7652-8BX28-0CE0**

Ordering data

	Article No.
SIMATIC PCS 7 OS Server Redundancy Upgrade Package V7.1 to V8.2 for redundant OS server pair, software class A, runs with Windows Server 2008 R2 Standard 64-bit or Windows Server 2012 R2 Standard 64-bit, single license for 2 installations	
5 languages (English, German, French, Italian, Spanish),	
comprising: • SIMATIC PCS 7 OS Server Redundancy Upgrade Package V7.1 to V8.0 • 2 x SIMATIC PCS 7 OS Server Upgrade Package V8.0/8.1 to V8.2 • SIMATIC PCS 7 Software Media Package V8.2	
- Delivery form package License key USB stick, certificate of license, bundled with 1 × SIMATIC PCS 7 Software Media Package per order item	**6ES7652-3BX28-2YE0**
- Online delivery License key download, online certificate of license, combined with SIMATIC PCS 7 Software Media Package (software download and online certificate of license) Note: E-mail address required!	**6ES7652-3BX28-2YK0**
ASIA, 2 languages (English, Chinese),	
comprising: • SIMATIC PCS 7 OS Server Redundancy Upgrade Package ASIA V7.1 to V8.0 • 2 x SIMATIC PCS 7 OS Server Upgrade Package ASIA V8.0/8.1 to V8.2 • SIMATIC PCS 7 Software Media Package ASIA V8.2	
- Delivery form package ASIA license key USB hardlock, certificate of license, bundled with 1 × SIMATIC PCS 7 Software Media Package ASIA per order item	**6ES7652-3BX28-2CE0**

	Article No.
SIMATIC PCS 7 OS Client/ SFC Visualization Upgrade Package V7.1 to V8.2 Software class A, runs with Windows 7 Ultimate 32/64-bit, Windows 10 Enterprise 2015 LTSB 64-bit, Windows Server 2008 R2 Standard 64-bit or Windows Server 2012 R2 Standard 64-bit, floating license for 1 user	
5 languages (English, German, French, Italian, Spanish),	
without SIMATIC PCS 7 Software Media Package, comprising: • SIMATIC PCS 7 OS Client/ SFC Visualization Upgrade Package V7.1 to V8.0 • SIMATIC PCS 7 OS Client/ SFC Visualization Upgrade Package V8.0/8.1 to V8.2	
- Delivery form package License key USB stick, certificate of license	**6ES7652-8CX28-0YF5**
- Online delivery License key download, online certificate of license Note: E-mail address required!	**6ES7652-8CX28-0YK5**
ASIA, 2 languages (English, Chinese),	
without SIMATIC PCS 7 Software Media Package ASIA, comprising: • SIMATIC PCS 7 OS Client/SFC Visualization Upgrade Package ASIA V7.1 to V8.0 • SIMATIC PCS 7 OS Client/SFC Visualization Upgrade Package ASIA V8.0/8.1 to V8.2	
- Delivery form package ASIA license key USB hardlock, certificate of license	**6ES7652-8CX28-0CF5**

Web Option for OS

PCS 7 Web Server Upgrade from V7.1 to V8.2	
SIMATIC PCS 7 Web Server Upgrade Package V7.1 to V8.2 for SIMATIC PCS 7 Web Server, SIMATIC PCS 7 Web Diagnose Server, SIMATIC PCS 7 Web Diagnose Client, 6 languages (English, German, French, Italian, Spanish, Chinese), software class A, runs with Windows Server 2008 R2 Standard 64-bit, Windows Server 2012 R2 Standard 64-bit (Web Server/ Web Diagnose Server) oder Windows 7 Ultimate 32/64-bit, Windows 10 Enterprise 2015 LTSB 64-bit (Web Diagnose Client), single license for 1 installation;	
without SIMATIC PCS 7 Software Media Package, comprising: • SIMATIC PCS 7 Web Server Upgrade Package V7.1 to V8.0 • SIMATIC PCS 7 Web Server Upgrade Package V8.0/8.1 to V8.2	
- Delivery form package License key USB stick, certificate of license	**6ES7652-8DX28-0YF0**
- Online delivery License key download, online certificate of license Note: E-mail address required!	**6ES7652-8DX28-0YK0**

Overview

Maintenance Station Upgrade Package

Using the SIMATIC PCS 7 Maintenance Station Upgrade Package, you can upgrade the SIMATIC PCS 7 Maintenance Station Runtime Basic Package as well as the SIMATIC PCS 7 Maintenance Station Engineering from V7.1 to V8.2. It is first necessary to upgrade to V8.0 and subsequently to V8.2.

The SNMP OPC server license is also taken into account for the upgrade.

The cumulative SIMATIC PCS 7 Maintenance Station Runtime licenses are independent of the version. Existing asset TAGs of these licenses are therefore completely available following the upgrade.

Ordering data

Ordering data	Article No.
PCS 7 Maintenance Station Upgrade from V7.1 to V8.2	
SIMATIC PCS 7 Maintenance Station Upgrade Package V7.1 to V8.2 for installation on SIMATIC PCS 7 BOX, single station or server 6 languages (English, German, French, Italian, Spanish, Chinese), software class A, runs with Windows 7 Ultimate 32/64-bit, Windows Server 2008 R2 Standard 64-bit or Windows Server 2012 R2 Standard 64-bit, single license for 1 installation without SIMATIC PCS 7 Software Media Package, comprising: • SIMATIC PCS 7 Maintenance Station Upgrade Package V7.1 to V8.0 • SIMATIC PCS 7 Maintenance Station Upgrade Package V8.0/8.1 to V8.2	
- Delivery form package License key USB stick, certificate of license	**6ES7652-8FX28-0YF0**
- Online delivery License key download, online certificate of license Note: E-mail address required!	**6ES7652-8FX28-0YK0**

Overview

SIMATIC BATCH Upgrade Packages

Upgrades combined in packages enable upgrading of existing SIMATIC BATCH systems from V7.1 to V8.2:

SIMATIC BATCH Server Upgrade Package

With upgrade licenses for:

- SIMATIC BATCH Server
- SIMATIC BATCH Basic
- SIMATIC BATCH Single Station User
- SIMATIC BATCH Single Station System
- SIMATIC BATCH API
- PCS 7 BCE
- Industrial Ethernet communication software for CP

SIMATIC BATCH Client Upgrade Package

With upgrade licenses for:

- SIMATIC BATCH Client
- SIMATIC BATCH Recipe System

It is first necessary to upgrade to V8.0 and subsequently to V8.2.

The cumulative SIMATIC BATCH UNITs are independent of the version. Existing UNITs are completely available following the upgrade.

Ordering data

	Article No.
SIMATIC BATCH Upgrade from V7.1 to V8.2	
SIMATIC BATCH Server Upgrade Package V7.1 to V8.2 6 languages (English, German, French, Italian, Spanish, Chinese), software class A, runs with Windows 7 Ultimate 64-bit, Windows Server 2008 R2 Standard 64-bit or Windows Server 2012 R2 Standard 64-bit, single license for 1 installation	
without SIMATIC PCS 7 Software Media Package, comprising: • SIMATIC BATCH Server Upgrade Package V7.1 to V8.0 • SIMATIC BATCH Server Upgrade Package V8.0/8.1 to V8.2 • SIMATIC BATCH Client Upgrade Package V8.0/8.1 to V8.2	
- Delivery form package License key USB stick, certificate of license	**6ES7657-8XX28-0YF0**
- Online delivery License key Ddownload, online certificate of license Note: E-mail address required!	**6ES7657-8XX28-0YK0**
SIMATIC BATCH Client Upgrade Package V7.1 to V8.2 6 languages (English, German, French, Italian, Spanish, Chinese), software class A, runs with Windows 7 Ultimate 32/64-bit, Windows 10 Enterprise 2015 LTSB 64-bit, Windows Server 2008 R2 Standard 64-bit or Windows Server 2012 R2 Standard 64-bit, floating license for 1 user	
without SIMATIC PCS 7 Software Media Package, comprising: • SIMATIC BATCH Client Upgrade Package V7.1 to V8.0 • SIMATIC BATCH Client Upgrade Package V8.0/8.1 to V8.2	
- Delivery form package License key USB stick, certificate of license	**6ES7657-8XX28-0YF5**
- Online delivery License key download, online certificate of license Note: E-mail address required!	**6ES7657-58XX28-0YK5**

Overview

SIMATIC Route Control Upgrade Packages

With SIMATIC Route Control Upgrade Packages you can upgrade Route Control Engineering, Route Control Server and Route Control Center from V7.1 to V8.2. The number of existing "Routes" (quantity option for number of simultaneous material transports) is fully available again after the upgrade.

It is first necessary to upgrade to V8.0 and subsequently to V8.2. When upgrading to V8.0, the "Routes" are converted into cumulative "Count Relevant Licenses".

Ordering data

	Article No.
SIMATIC Route Control Upgrade from V7.1 to V8.2	
SIMATIC Route Control Upgrade Package V7.1 to V8.2 6 languages (English, German, French, Italian, Spanish, Chinese), software class A, runs with Windows 7 Ultimate 32/64-bit, Windows Server 2008 R2 Standard 64-bit or Windows Server 2012 R2 Standard 64-bit, single license for 1 installation	
without SIMATIC PCS 7 Software Media Package, comprising: • SIMATIC Route Control Upgrade Package V7.1 to V8.0 • SIMATIC Route Control Upgrade Package V8.0/8.1 to V8.2	
- Delivery form package License key USB stick, certificate of license	**6ES7652-8XX28-0YF0**
- Online delivery License key download, online certificate of license Note: E-mail address required!	**6ES7652-8XX28-0YK0**

Overview

Engineering Upgrade Package V8.0 to V8.1

SIMATIC PCS 7 Engineering System with Engineering Software V8.0 and Management Console V8.0 can be upgraded to Version 8.1 using the SIMATIC PCS 7 Engineering Upgrade Package.

The licenses included in the Engineering Upgrade Package V8.0 to V8.1 apply to the following software products of SIMATIC PCS 7 Version 8.0:

- PCS 7 ES Single Station, PCS 7 AS Engineering Software, PCS 7 AS/OS Engineering Software
- PCS 7 Import-Export Assistant
- SIMATIC Version Trail
- PCS 7 SFC Visualization
- PCS 7 BCE
- PCS 7 Management Console
- Industrial Ethernet communication software for CP

Engineering Upgrade Package V7.1 to V8.1

SIMATIC PCS 7 Engineering System with Engineering Software V7.1 can be upgraded in two steps, initially to V8.0 and then to V8.1. Depending on the starting point, one of the two following versions of the SIMATIC PCS 7 Engineering Upgrade Package can be used:

- SIMATIC PCS 7 Engineering Upgrade Package AS/OS, unlimited POs
  (without OS Runtime license for productive operation), for classic engineering station without limitation of engineering.
- SIMATIC PCS 7 Engineering Upgrade Package AS/OS, 250 to 2 000 POs
  (with OS Runtime license for productive operation), for combined engineering/operator station in small applications

Any existing OS Runtime license is converted to a cumulative "Count Relevant License" during the upgrade from V7.1 to V8.0. The number of OS Runtime POs is retained.

The licenses included in the Engineering Upgrade Package V7.1 to V8.1 apply to the following software products of SIMATIC PCS 7 Version 7.1:

- PCS 7 Engineering AS, OS, AS/OS (250 POs to 2 000 POs) or PCS 7 Engineering AS, OS, AS/OS (unlimited POs), each including redundancy
- PCS 7 Import-Export Assistant
- SIMATIC Version Trail
- PCS 7 SFC Visualization
- PCS 7 BCE
- Industrial Ethernet communication software for CP

SIMATIC Version Cross Manager Upgrade

SIMATIC Version Cross Manager V7.1 can be used in both SIMATIC PCS 7 V7.1 and in SIMATIC PCS 7 V8.0 and V8.1. As a result, there is no need for this upgrade when upgrading from SIMATIC PCS 7 V7.1 to V8.0 or V8.1. Consequently, SIMATIC Version Cross Manager is not included in the SIMATIC PCS 7 Engineering Upgrade Packages AS/OS for upgrading from V7.1 to V8.0 or V8.1.

Advanced Engineering System Upgrade

The SIMATIC PCS 7 Advanced Engineering System Upgrade is offered as a separate product in addition to the SIMATIC PCS 7 Engineering Upgrade Package.

Since the SIMATIC PCS 7 Advanced Engineering System V8.0 (incl. service pack) can be used both in SIMATIC PCS 7 V8.0 and SIMATIC PCS 7 V8.1, this upgrade is only available for the upgrade from V7.1 to V8.0 (incl. SP1).

Ordering data

Engineering software

Engineering Software Upgrade from V8.0 auf V8.1, based on the existing number of POs	Article No.
SIMATIC PCS 7 Engineering Upgrade Package AS/OS V8.0 to V8.1 Software class A, runs with Windows 7 Ultimate 32/64-bit or Windows Server 2008 R2 Standard 64-bit, floating license for 1 user	
5 languages (English, German, French, Italian, Spanish)	
• Delivery form package (with SIMATIC PCS 7 Software Media Package) License key USB stick, certificate of license, software DVDs and certificate of license for SIMATIC PCS 7 Software Media Package V8.1	**6ES7651-5AX18-0YE5**
• Delivery form online (without SIMATIC PCS 7 Software Media Package) License key download, online certificate of license Note: E-mail address required!	**6ES7651-5AX18-0YK5**
ASIA, 2 languages (English, Chinese)	
• Delivery form package (with SIMATIC PCS 7 Software Media Package ASIA): ASIA license key USB hardlock, certificate of license, software DVDs and certificate of license for SIMATIC PCS 7 Software Media Package ASIA V8.1	**6ES7651-5AX18-0CE5**

Engineering Software Upgrade from V7.1 to V8.1	Article No.
SIMATIC PCS 7 Engineering Upgrade Package AS/OS V7.1 to V8.1 Software class A, runs with Windows 7 Ultimate 32/64-bit or Windows Server 2008 R2 Standard 64-bit, floating license for 1 user; comprising: • SIMATIC PCS 7 Engineering Upgrade Package AS/OS V7.1 to V8.0 • SIMATIC PCS 7 Engineering Upgrade Package AS/OS V8.0 to V8.1	
5 languages (English, German, French, Italian, Spanish)	
• Delivery form package (with SIMATIC PCS 7 Software Media Package) License key USB stick, certificate of license, software DVDs and certificate of license for SIMATIC PCS 7 Software Media Package V8.1	
- 250 to 2 000 POs (with OS Runtime license for productive operation)	**6ES7651-7AC18-0YE5**
- Unlimited POs (without OS Runtime license for productive operation)	**6ES7651-7AF18-0YE5**
• Delivery form online (without SIMATIC PCS 7 Software Media Package) License key download, online certificate of license Note: E-mail address required!	
- 250 to 2 000 POs (with OS Runtime license for productive operation)	**6ES7651-7AC18-0YK5**
- Unlimited POs (without OS Runtime license for productive operation)	**6ES7651-7AF18-0YK5**

Advanced Engineering

SIMATIC PCS 7 Advanced Engineering System Upgrade V7.1 to V8.0 (incl. SP) 2 languages (English, German), software class A, runs with Windows XP Professional 32-bit, Windows 7 Ultimate 32/64-bit, Windows Server 2003 R2 Standard 32-bit, or Windows Server 2008 R2 Standard 64-bit, floating license for 1 user	
• Delivery form package (without SIMATIC PCS 7 Software Media Package) License key USB stick, certificate of license	**6ES7658-1GX08-2YE5**
• Delivery form online (without SIMATIC PCS 7 Software Media Package) License key download, online certificate of license Note: E-mail address required!	**6ES7658-1GX08-2YK5**

Overview

Upgrades combined in packages enable upgrading of existing Operator Systems V7.1/V8.0 to V8.1 with consideration of the number of existing process objects and archive variables.

OS Software Upgrades V8.0 from V8.1

The following Upgrade Packages for upgrading to V8.1 are offered for SIMATIC PCS 7 operator stations with OS Software V8.0:

- SIMATIC PCS 7 OS Single Station Upgrade Package
- SIMATIC PCS 7 OS Server Upgrade Package
- SIMATIC PCS 7 OS Client/SFC Visualization Upgrade Package

Two Upgrade Packages of type OS Single Station or OS Server are required in each case for redundant SIMATIC PCS 7 operator stations.

OS Software Upgrades V7.1 from V8.1

SIMATIC PCS 7 Operator Stations with OS Software V7.1 can be upgraded in two steps, initially to V8.0 and then to V8.1. Depending on the starting point, the following Upgrade Packages are available:

- SIMATIC PCS 7 OS Single Station Upgrade Package
- SIMATIC PCS 7 OS Single Station Redundancy Upgrade Package
- SIMATIC PCS 7 OS Server Upgrade Package
- SIMATIC PCS 7 OS Server Redundancy Upgrade Package
- SIMATIC PCS 7 OS Client/SFC Visualization Upgrade Package

The OS Runtime licenses are converted to cumulative "Count Relevant Licenses" during the upgrade. The number of existing OS Runtime POs is retained.

The following table shows the number of Upgrade Packages required for upgrading the individual types of station.

Upgrade Package	Version	OS Single Station		OS server		OS Client
		Separate	Redundant	Separate	Redundant	
PCS 7 OS Single Station	V8.0 to V8.1	**1**	**2**	–	–	–
	V7.1 to V8.1	**1**	–	–	–	–
PCS 7 OS Single Station Redundancy	V7.1 to V8.1	–	**1**	–	–	–
PCS 7 OS Server	V8.0 to V8.1	–	–	**1**	**2**	–
	V7.1 to V8.1	–	–	**1**	–	–
PCS 7 OS Server Redundancy	V7.1 to V8.1	–	–	–	**1**	–
PCS 7 OS Client/SFC Visualization	V8.0 to V8.1	–	–	–	–	**1**
	V7.1 to V8.1	–	–	–	–	**1**

In addition to the licenses for the PCS 7 OS Software Single Station or Server, the Upgrade Packages for OS Single Station and OS Server include upgrade licenses for:

- SIMATIC PCS 7 SFC Visualization
- SIMATIC PCS 7 BCE
- Industrial Ethernet communication software for CP
- SIMATIC PCS 7 OpenPCS 7 and SIMATIC PCS 7 OpenPCS 7/ OS Client

The upgrade license for SIMATIC PCS 7 SFC Visualization is also part of the Upgrade Package SIMATIC PCS 7 OS Client/ SFC Visualization.

The upgrade licenses for Process Historian and Information Server are also embedded in SIMATIC PCS 7 OS Server Upgrade Package V8.0 to V8.1. With a SIMATIC PCS 7 OS Server Upgrade Package V8.0 to V8.1, only one SIMATIC PCS 7 OS Server or one SIMATIC PCS 7 Process Historian (with/ without Information Server) can be upgraded (for details see table in section "Upgrades for Process Historian and Information Server").

Upgrade of the Web Option for OS

Using the SIMATIC PCS 7 OS Web Server Upgrade Package, you can upgrade the SIMATIC PCS 7 Web server, SIMATIC PCS 7 Web diagnostics server and SIMATIC PCS 7 Web diagnostics clients from V7.1 or V8.0 to V8.1. When upgrading from V7.1 to V8.1 it is first necessary to upgrade to V8.0 and subsequently to V8.1.

Upgrades for Operator System incl. OpenPCS 7 and Web Option for OS

Ordering data

OS Software

Ordering data	Article No.
OS Software Upgrade from V8.0 auf V8.1, based on the existing number of POs	
SIMATIC PCS 7 OS Single Station Upgrade Package V8.0 to V8.1 For OS Single Station, software class A, runs with Windows 7 Ultimate 32/64-bit; single license for 1 installation	
5 languages (English, German, French, Italian, Spanish)	
• Delivery form package (with SIMATIC PCS 7 Software Media Package) License key USB stick, certificate of license, software DVDs and certificate of license for SIMATIC PCS 7 Software Media Package V8.1	**6ES7652-5AX18-0YE0**
• Delivery form online (without SIMATIC PCS 7 Software Media Package) License key download, online certificate of license Note: E-mail address required!	**6ES7652-5AX18-0YK0**
ASIA, 2 languages (English, Chinese)	
• Delivery form package (with SIMATIC PCS 7 Software Media Package ASIA) ASIA license key USB hardlock, certificate of license, software DVDs and certificate of license for SIMATIC PCS 7 Software Media Package ASIA V8.1	**6ES7652-5AX18-0CE0**
SIMATIC PCS 7 OS Server Upgrade Package V8.0 to V8.1 For OS Server, software class A, runs with Windows Server 2008 R2 Standard 64-bit; single license for 1 installation	
5 languages (English, German, French, Italian, Spanish)	
• Delivery form package (with SIMATIC PCS 7 Software Media Package) License key USB stick, certificate of license, software DVDs and certificate of license for SIMATIC PCS 7 Software Media Package V8.1	**6ES7652-5BX18-0YE0**
• Delivery form online (without SIMATIC PCS 7 Software Media Package) License key download, online certificate of license Note: E-mail address required!	**6ES7652-5BX18-0YK0**
ASIA, 2 languages (English, Chinese)	
• Delivery form package (with SIMATIC PCS 7 Software Media Package ASIA) ASIA license key USB hardlock, certificate of license, software DVDs and certificate of license for SIMATIC PCS 7 Software Media Package ASIA V8.1	**6ES7652-5BX18-0CE0**
SIMATIC PCS 7 OS Client/ SFC Visualization Upgrade Package V8.0 to V8.1 Software class A, runs with Windows 7 Ultimate 32/64-bit or Windows Server 2008 R2 Standard 64-bit, floating license for 1 user	
5 languages (English, German, French, Italian, Spanish)	
• Delivery form package (without SIMATIC PCS 7 Software Media Package) License key USB stick, certificate of license	**6ES7652-5CX18-0YF5**
• Delivery form online (without SIMATIC PCS 7 Software Media Package) License key download, online certificate of license Note: E-mail address required!	**6ES7652-5CX18-0YK5**
ASIA, 2 languages (English, Chinese)	
• Delivery form package (without SIMATIC PCS 7 Software Media Package ASIA) ASIA license key USB hardlock, certificate of license	**6ES7652-5CX18-0CF5**
OS Software Upgrade from V7.1 auf V8.1, based on the existing number of POs	
SIMATIC PCS 7 OS Single Station Upgrade Package V7.1 to V8.1 For OS Single Station, software class A, runs with Windows 7 Ultimate 32/64-bit; single license for 1 installation; comprising: • SIMATIC PCS 7 OS Single Station Upgrade Package V7.1 to V8.0 • SIMATIC PCS 7 OS Single Station Upgrade Package V8.0 to V8.1	
5 languages (English, German, French, Italian, Spanish)	
• Delivery form package (with SIMATIC PCS 7 Software Media Package) License key USB stick, certificate of license, software DVDs and certificate of license for SIMATIC PCS 7 Software Media Package V8.1	**6ES7652-8AX18-0YE0**
• Delivery form online (without SIMATIC PCS 7 Software Media Package) License key download, online certificate of license Note: E-mail address required!	**6ES7652-8AX18-0YK0**

Ordering data

	Article No.
SIMATIC PCS 7 OS Single Station Redundancy Upgrade Package V7.1 to V8.1 For OS Single Station Redundancy, software class A, runs with Windows 7 Ultimate 32/64-bit; single license for 2 installations; comprising: • SIMATIC PCS 7 OS Single Station Redundancy Upgrade Package V7.1 to V8.0 • 2 x SIMATIC PCS 7 OS Single Station Upgrade Package V8.0 to V8.1 5 languages (English, German, French, Italian, Spanish)	
• Delivery form package (with SIMATIC PCS 7 Software Media Package) License key USB stick, certificate of license, software DVDs and certificate of license for SIMATIC PCS 7 Software Media Package V8.1	**6ES7652-3AX18-2YE0**
• Delivery form online (without SIMATIC PCS 7 Software Media Package) License key download, online certificate of license Note: E-mail address required!	**6ES7652-3AX18-2YK0**
SIMATIC PCS 7 OS Server Upgrade Package V7.1 to V8.1 For OS Server, software class A, runs with Windows Server 2008 R2 Standard 64-bit; single license for 1 installation; comprising: • SIMATIC PCS 7 OS Server Upgrade Package V7.1 to V8.0 • SIMATIC PCS 7 OS Server Upgrade Package V8.0 to V8.1 5 languages (English, German, French, Italian, Spanish)	
• Delivery form package (with SIMATIC PCS 7 Software Media Package) License key USB stick, certificate of license, software DVDs and certificate of license for SIMATIC PCS 7 Software Media Package V8.1	**6ES7652-8BX18-0YE0**
• Delivery form online (without SIMATIC PCS 7 Software Media Package) License key download, online certificate of license Note: E-mail address required!	**6ES7652-8BX18-0YK0**

	Article No.
SIMATIC PCS 7 OS Server Redundancy Upgrade Package V7.1 to V8.1 For OS Redundancy Server, software class A, runs with Windows Server 2008 R2 Standard 64-bit; single license for 2 installations; comprising: • SIMATIC PCS 7 OS Server Redundancy Upgrade Package V7.1 to V8.0 • 2 x SIMATIC PCS 7 OS Server Upgrade Package V8.0 to V8.1 5 languages (English, German, French, Italian, Spanish)	
• Delivery form package (with SIMATIC PCS 7 Software Media Package) License key USB stick, certificate of license, software DVDs and certificate of license for SIMATIC PCS 7 Software Media Package V8.1	**6ES7652-3BX18-2YE0**
• Delivery form online (without SIMATIC PCS 7 Software Media Package) License key download, online certificate of license Note: E-mail address required!	**6ES7652-3BX18-2YK0**
SIMATIC PCS 7 OS Client/ SFC Visualization Upgrade Package V7.1 to V8.1 Software class A, runs with Windows 7 Ultimate 32/64-bit or Windows Server 2008 R2 Standard 64-bit, floating license for 1 user; comprising: • SIMATIC PCS 7 OS Client/ SFC Visualization Upgrade Package V7.1 to V8.0 • SIMATIC PCS 7 OS Client/ SFC Visualization Upgrade Package V8.0 to V8.1 5 languages (English, German, French, Italian, Spanish)	
• Delivery form package (without SIMATIC PCS 7 Software Media Package) License key USB stick, certificate of license	**6ES7652-8CX18-0YF5**
• Delivery form online (without SIMATIC PCS 7 Software Media Package) License key download, online certificate of license Note: E-mail address required!	**6ES7652-8CX18-0YK5**

Ordering data

Web option for OS

PCS 7 Web Server Upgrade from V8.0 to V8.1	Article No.
SIMATIC PCS 7 Web Server Upgrade Package V8.0 to V8.1 For SIMATIC PCS 7 Web Server, SIMATIC PCS 7 Web Diagnostics Server, SIMATIC PCS 7 Web Diagnostics Client, 6 languages (English, German, French, Italian, Spanish, Chinese), software class A, runs with Windows Server 2008 R2 Standard 64-bit (Web Server/Web Diagnostics Server) or Windows 7 Ultimate 32/64-bit (Web Diagnostics Client), single license for 1 installation	
• Delivery form package (without SIMATIC PCS 7 Software Media Package) License key USB stick, certificate of license	**6ES7652-5DX18-0YF0**
• Delivery form online (without SIMATIC PCS 7 Software Media Package) License key download, online certificate of license Note: E-mail address required!	**6ES7652-5DX18-0YK0**

PCS 7 Web Server Upgrade from V7.1 to V8.1	Article No.
SIMATIC PCS 7 Web Server Upgrade Package V7.1 to V8.1 For SIMATIC PCS 7 Web Server, SIMATIC PCS 7 Web Diagnostics Server, SIMATIC PCS 7 Web Diagnostics Client, 6 languages (English, German, French, Italian, Spanish, Chinese), software class A, runs with Windows Server 2008 R2 Standard 64-bit (Web Server/Web Diagnostics Server) or Windows 7 Ultimate 32/64-bit (Web Diagnostics Client), single license for 1 installation; comprising: • SIMATIC PCS 7 Web Server Upgrade Package V7.1 to V8.0 • SIMATIC PCS 7 Web Server Upgrade Package V8.0 to V8.1	
- Delivery form package (without SIMATIC PCS 7 Software Media Package) License key USB stick, certificate of license	**6ES7652-8DX18-0YF0**
- Delivery form online (without SIMATIC PCS 7 Software Media Package) License key download, online certificate of license Note: E-mail address required!	**6ES7652-8DX18-0YK0**

Overview

The upgrade licenses for Process Historian and Information Server are embedded in the SIMATIC PCS 7 OS Server Upgrade Package V8.0 to V8.1. The following table shows the number of SIMATIC PCS 7 OS Server Upgrade Packages required for upgrading the various types of station.

Upgrade Package	Single Server				Server Redundancy	
	OS Server	Process Historian plus Information Server	Information Server	Process Historian	OS Server	Process Historian
PCS 7 OS Server Upgrade Package V8.0 to V8.1	1	1	–	1	2	2

A separate upgrade package is not required for a separate information server.

Maintenance Station Upgrade Package

Using the SIMATIC PCS 7 Maintenance Station Upgrade Packages, you can upgrade the SIMATIC PCS 7 Maintenance Station Runtime Basic Package as well as the SIMATIC PCS 7 Maintenance Station Engineering from V7.1 or V8.0 to V8.1. The SNMP OPC server license is also taken into account for the upgrade.

When upgrading from V7.1 to V8.1 it is first necessary to upgrade to V8.0 and subsequently to V8.1.

The cumulative SIMATIC PCS 7 Maintenance Station Runtime licenses are independent of the version. Existing asset TAGs of these licenses are therefore completely available following the upgrade.

Ordering data

	Article No.
PCS 7 Maintenance Station Upgrade from V8.0 to V8.1	
SIMATIC PCS 7 Maintenance Station Upgrade Package V8.0 to V8.1 For installation on SIMATIC PCS 7 BOX, single station or server 6 languages (English, German, French, Italian, Spanish, Chinese), software class A, runs with Windows 7 Ultimate 32/64-bit or Windows Server 2008 R2 Standard 64-bit, single license for 1 installation	
• Delivery form package (without SIMATIC PCS 7 Software Media Package) License key USB stick, certificate of license	**6ES7652-5FX18-0YF0**
• Delivery form online (without SIMATIC PCS 7 Software Media Package) License key download, online certificate of license Note: E-mail address required!	**6ES7652-5FX18-0YK0**
PCS 7 Maintenance Station Upgrade from V7.1 to V8.1	
SIMATIC PCS 7 Maintenance Station Upgrade Package V7.1 to V8.1 For installation on SIMATIC PCS 7 BOX, single station or server 6 languages (English, German, French, Italian, Spanish, Chinese), software class A, runs with Windows 7 Ultimate 32/64-bit or Windows Server 2008 R2 Standard 64-bit, single license for 1 installation	
• Delivery form package (without SIMATIC PCS 7 Software Media Package) License key USB stick, certificate of license	**6ES7652-8FX18-0YF0**
• Delivery form online (without SIMATIC PCS 7 Software Media Package) License key download, online certificate of license Note: E-mail address required!	**6ES7652-8FX18-0YK0**

Overview

SIMATIC BATCH Upgrade Packages

Upgrades combined in packages enable upgrading of existing SIMATIC BATCH systems from V7.x or V8.0 to V8.1:

SIMATIC BATCH Server Upgrade Package

With upgrade licenses for:

- SIMATIC BATCH Server
- SIMATIC BATCH Basic
- SIMATIC BATCH Single Station User
- SIMATIC BATCH Single Station System
- SIMATIC BATCH API
- PCS 7 BCE
- Industrial Ethernet communication software for CP

SIMATIC BATCH Client upgrade package

With upgrade licenses for:

- SIMATIC BATCH Client
- SIMATIC BATCH Recipe System

SIMATIC BATCH V7.0 and SIMATIC BATCH V7.1 are identical in their functions. When upgrading from V7.0/V7.1 to V8.1 it is first necessary to upgrade to V8.0 and subsequently to V8.1.

The cumulative SIMATIC BATCH UNITs are independent of the version. Existing UNITs are completely available following the upgrade.

Ordering data

	Article No.		Article No.
SIMATIC BATCH Upgrade from V8.0 to V8.1		**SIMATIC BATCH Upgrade from V7.0 or V7.1 to V8.1**	
SIMATIC BATCH Server Upgrade Package V8.0 to V8.1 6 languages (English, German, French, Italian, Spanish, Chinese), software class A, runs with Windows 7 Ultimate 64-bit or Windows Server 2008 R2 Standard 64-bit, single license for 1 installation		**SIMATIC BATCH Server Upgrade Package V7.x to V8.1** 6 languages (English, German, French, Italian, Spanish, Chinese), software class A, runs with Windows 7 Ultimate 64-bit or Windows Server 2008 R2 Standard 64-bit, single license for 1 installation	
• Delivery form package (without SIMATIC PCS 7 Software Media Package) License key USB stick, certificate of license	**6ES7657-5XX18-0YF0**	• Delivery form package (without SIMATIC PCS 7 Software Media Package) License key USB stick, certificate of license	**6ES7657-8XX18-0YF0**
• Delivery form online (without SIMATIC PCS 7 Software Media Package) License key download, online certificate of license Note: E-mail address required!	**6ES7657-5XX18-0YK0**	• Delivery form online (without SIMATIC PCS 7 Software Media Package) License key download, online certificate of license Note: E-mail address required!	**6ES7657-8XX18-0YK0**
SIMATIC BATCH Client Upgrade Package V8.0 to V8.1 6 languages (English, German, French, Italian, Spanish, Chinese), software class A, runs with Windows 7 Ultimate 32/64-bit or Windows Server 2008 R2 Standard 64-bit, floating license for 1 user		**SIMATIC BATCH Client Upgrade Package V7.x to V8.1** 6 languages (English, German, French, Italian, Spanish, Chinese), software class A, runs with Windows 7 Ultimate 32/64-bit or Windows Server 2008 R2 Standard 64-bit, floating license for 1 user	
• Delivery form package (without SIMATIC PCS 7 Software Media Package) License key USB stick, certificate of license	**6ES7657-5XX18-0YF5**	• Delivery form package (without SIMATIC PCS 7 Software Media Package) License key USB stick, certificate of license	**6ES7657-8XX18-0YF5**
• Delivery form online (without SIMATIC PCS 7 Software Media Package) License key download, online certificate of license Note: E-mail address required!	**6ES7657-5XX18-0YK5**	• Delivery form online (without SIMATIC PCS 7 Software Media Package) License key download, online certificate of license Note: E-mail address required!	**6ES7657-8XX18-0YK5**

Overview

SIMATIC Route Control Upgrade Package

With SIMATIC Route Control Upgrade Packages you can upgrade Route Control Engineering, Route Control Server and Route Control Center from V7.x or V8.0 to V8.1. The number of existing "Routes" (quantity option for number of simultaneous material transports) is fully available again after the upgrade.

SIMATIC Route Control V7.0 and SIMATIC Route Control V7.1 are identical in their functions. When upgrading from V7.0/V7.1 to V8.1 it is first necessary to upgrade to V8.0 and subsequently to V8.1. When upgrading to V8.0, the "Routes" are converted into cumulative "Count Relevant Licenses".

SIMATIC Route Control Center Upgrades, which are only available as an online delivery, allow separate upgrading of the Route Control Center software from V7.0 or V7.1 to V8.0 and V8.0 to V8.1.

Ordering data

	Article No.
SIMATIC Route Control Upgrade from V8.0 to V8.1	
SIMATIC Route Control Upgrade Package V8.0 to V8.1 6 languages (English, German, French, Italian, Spanish, Chinese), software class A, runs with Windows 7 Ultimate 32/64-bit or Windows Server 2008 R2 Standard 64-bit, single license for 1 installation	
• Delivery form package (without SIMATIC PCS 7 Software Media Package) License key USB stick, certificate of license	**6ES7652-5XX18-0YF0**
• Delivery form online (without SIMATIC PCS 7 Software Media Package) License key download, online certificate of license Note: E-mail address required!	**6ES7652-5XX18-0YK0**
SIMATIC Route Control Center Upgrade V8.0 to V8.1 6 languages (English, German, French, Italian, Spanish, Chinese), software class A, runs with Windows 7 Ultimate 32/64-bit or Windows Server 2008 R2 Standard 64-bit, floating license for 1 user	
• Delivery form online (without SIMATIC PCS 7 Software Media Package) License key download, online certificate of license Note: E-mail address required!	**6ES7658-7EX18-0YK0**

	Article No.
SIMATIC Route Control Upgrade from V7.0 or V7.1 to V8.1	
SIMATIC Route Control Upgrade Package V7.x to V8.1 6 languages (English, German, French, Italian, Spanish, Chinese), software class A, runs with Windows 7 Ultimate 32/64-bit or Windows Server 2008 R2 Standard 64-bit, single license for 1 installation	
• Delivery form package (without SIMATIC PCS 7 Software Media Package) License key USB stick, certificate of license	**6ES7652-8XX18-0YF0**
• Delivery form online (without SIMATIC PCS 7 Software Media Package) License key download, online certificate of license Note: E-mail address required!	**6ES7652-8XX18-0YK0**
SIMATIC Route Control Center Upgrade 6 languages (English, German, French, Italian, Spanish, Chinese), software class A, runs with Windows 7 Ultimate 32/64-bit or Windows Server 2008 R2 Standard 64-bit, floating license for 1 user	
• V7.x to V8.0, delivery form online (without SIMATIC PCS 7 Software Media Package) License key download, online certificate of license Note: E-mail address required!	**6ES7658-7EX08-0YK5**
• V8.0 to V8.1, delivery form online (without SIMATIC PCS 7 Software Media Package) License key download, online certificate of license Note: E-mail address required!	**6ES7658-7EX18-0YK0**

Overview

Engineering Upgrade Package

SIMATIC PCS 7 engineering systems with Engineering Software V7.1 can be upgraded to Version 8.0 using the SIMATIC PCS 7 Engineering Upgrade Package. One of the following two versions of the SIMATIC PCS 7 Engineering Upgrade Packages can be used depending on the starting configuration:

- SIMATIC PCS 7 Engineering Upgrade Package AS/OS, unlimited POs
  (with OS Runtime license for productive operation), for classic engineering station without limitation of engineering.
- SIMATIC PCS 7 Engineering Upgrade Package AS/OS, 250 to 2 000 POs
  (with OS Runtime license for productive operation), for combined engineering/operator station in small applications

Any existing OS Runtime license is converted to a cumulative "Count Relevant License" with an upgrade. The number of OS Runtime POs is fully retained.

The licenses included in the Engineering Upgrade Package V7.1 to V8.0 apply to the following software products of SIMATIC PCS 7 Version 7.1:

- PCS 7 Engineering AS, OS, AS/OS (250 POs to 2 000 POs) or PCS 7 Engineering AS, OS, AS/OS (unlimited POs), each including redundancy
- PCS 7 Import-Export Assistant
- Version Cross Manager
- Version Trail
- PCS 7 SFC Visualization
- PCS 7 BCE
- SIMATIC NET HARDNET-IE S7

Advanced Engineering Upgrade

Additive to the SIMATIC PCS 7 Engineering Upgrade Package AS/OS, a separate upgrade for V8.0 is available for the SIMATIC PCS 7 Advanced Engineering System V7.1.

Ordering data

	Article No.
Engineering software	
Engineering Software Upgrade from V7.1 to V8.0	
SIMATIC PCS 7 Engineering Upgrade Package AS/OS V7.1 to V8.0 Software class A, runs with Windows XP Professional 32-bit, Windows 7 Ultimate 32/64-bit, Windows Server 2003 R2 Standard 32-bit, Windows Server 2008 Standard 32-bit, or Windows Server 2008 R2 Standard 64-bit, floating license for 1 user	
5 languages (English, German, French, Italian, Spanish)	
• Delivery form package (with SIMATIC PCS 7 Software Media Package) License key USB stick, certificate of license, software DVDs and certificate of license for SIMATIC PCS 7 Software Media Package V8.0	
- 250 to 2 000 POs (with OS Runtime license for productive operation)	**6ES7651-5AC08-0YE5**
- Unlimited POs (without OS Runtime license for productive operation)	**6ES7651-5AF08-0YE5**
• Delivery form online (without SIMATIC PCS 7 Software Media Package) License key download, online certificate of license Note: E-mail address required!	
- 250 to 2 000 POs (with OS Runtime license for productive operation)	**6ES7651-5AC08-0YK5**
- Unlimited POs (without OS Runtime license for productive operation)	**6ES7651-5AF08-0YK5**

	Article No.
ASIA, 2 languages (English, Chinese)	
• Delivery form package (with SIMATIC PCS 7 Software Media Package ASIA): ASIA license key USB hardlock, certificate of license, software DVDs and certificate of license for SIMATIC PCS 7 Software Media Package ASIA V8.0	
- 250 to 2 000 POs (with OS Runtime license for productive operation)	**6ES7651-5AC08-0CE5**
- Unlimited POs (without OS Runtime license for productive operation)	**6ES7651-5AF08-0CE5**
Advanced Engineering	
SIMATIC PCS 7 Advanced Engineering System Upgrade V7.1 to V8.0 2 languages (English, German), software class A, runs with Windows XP Professional 32-bit, Windows 7 Ultimate 32/64-bit, Windows Server 2003 R2 Standard 32-bit or Windows Server 2008 R2 Standard 64-bit, floating license for 1 user	
• Delivery form package (without SIMATIC PCS 7 Software Media Package) License key USB stick, certificate of license	**6ES7658-1GX08-2YE5**
• Delivery form online (without SIMATIC PCS 7 Software Media Package) License key download, online certificate of license Note: E-mail address required!	**6ES7658-1GX08-2YK5**

Overview

Upgrades combined in packages enables upgrading of existing V7.1 operator systems to V8.0.

Upgrades of OS software

The upgrade of the SIMATIC PCS 7 OS Software V7.1 to V8.0 is included on the following OS Software Upgrade Packages:

- SIMATIC PCS 7 OS Single Station Upgrade Package
- SIMATIC PCS 7 OS Single Station Redundancy Upgrade Package
- SIMATIC PCS 7 OS Server Upgrade Package
- SIMATIC PCS 7 OS Server Redundancy Upgrade Package
- SIMATIC PCS 7 OS Client/SFC Visualization Upgrade Package

This permits archiving according to the number of existing process objects and archive variables.

The OS Runtime licenses are converted to cumulative "Count Relevant Licenses" during the upgrade. The number of existing OS Runtime POs is fully retained.

The table below shows which and how many products are upgraded with the various upgrade packages.

	OS Single Stations		OS Server		OS Clients
	Separate	Redundant	Separate	Redundant	
Upgrade Package	**OS Single Station**	**OS Single Station Redundancy**	**OS Server**	**OS Server Redundancy**	**OS Client/ SFC Visualization**
PCS 7 OS Software Single Station (all PO versions)	**1**	–	–	–	–
PCS 7 OS Software Single Station with WinCC Redundancy (all PO variants)	–	**2**	–	–	–
PCS 7 OS Software Server (all PO versions)	–	–	**1**	–	–
PCS 7 OS Software Server with WinCC Redundancy (all PO variants)	–	–	–	**2**	–
PCS 7 OS Software Client	–	–	–	–	**1**
Central Archive Server (CAS)	–	–	**0**	**0**	–
PCS 7 StoragePlus	**1**	**2**	**1**	**2**	–
PCS 7 SFC Visualization	**1**	**2**	**1**	**2**	**1**
PCS 7 BCE	**1**	**2**	**1**	**2**	–
SIMATIC NET S7-1613 for Industrial Ethernet	**1**	**2**	**1**	**2**	–
PCS 7 OpenPCS 7 Server/OS Client (multi-functional)	**1**	**2**	**1**	**2**	–
PCS 7 OpenPCS 7 Server (stand-alone)	**1**	**2**	**1**	**2**	–

OS Archiving Upgrades

StoragePlus Upgrade

The SIMATIC PCS 7 StoragePlus Upgrade from StoragePlus V7.1 to V8.0 is part of the following OS software upgrade packages:

- SIMATIC PCS 7 OS Single Station Upgrade Package
- SIMATIC PCS 7 OS Single Station Redundancy Upgrade Package
- SIMATIC PCS 7 OS Server Upgrade Package
- SIMATIC PCS 7 OS Server Redundancy Upgrade Package

Central Archive Server (CAS) Upgrade

A separate Central Archive Server Basic Upgrade Package enables the upgrade of the Central Archive Server (CAS) from V7.1 to V8.0. If the CAS has a redundant configuration, two Central Archive Server Basic Upgrade Packages are required for the upgrade.

Upgrade of the Web Option for OS

Using the SIMATIC PCS 7 OS Web Server Upgrade Package, you can upgrade the SIMATIC PCS 7 Web server, SIMATIC PCS 7 Web diagnostics server and SIMATIC PCS 7 Web diagnostics clients from V7.1 to V8.0.

Ordering data

OS software

	Article No.
OS software upgrade from V7.1 to V8.0, based on the existing number of POs	
SIMATIC PCS 7 OS Single Station Upgrade Package V7.1 to V8.0 For OS Single Station, software class A, runs with Windows XP Professional 32-bit, Windows 7 Ultimate 32/64-bit, single license for 1 installation	
• 5 languages (English, German, French, Italian, Spanish)	
- Delivery form package (with SIMATIC PCS 7 Software Media Package) License key USB stick, certificate of license, software DVDs and certificate of license for SIMATIC PCS 7 Software Media Package V8.0	**6ES7658-2AX08-0YE0**
- Delivery form online (without SIMATIC PCS 7 Software Media Package) License key download, online certificate of license Note: E-mail address required!	**6ES7658-2AX08-0YK0**
• ASIA, 2 languages (English, Chinese)	
- Delivery form package (with SIMATIC PCS 7 Software Media Package ASIA) ASIA license key USB hardlock, certificate of license, software DVDs and certificate of license for SIMATIC PCS 7 Software Media Package ASIA V8.0	**6ES7658-2AX08-0CE0**
SIMATIC PCS 7 OS Single Station Redundancy Upgrade Package V7.1 to V8.0 For OS Single Station Redundancy, software class A, runs with Windows XP Professional 32-bit, Windows 7 Ultimate 32/64-bit, single license for 2 installations	
• 5 languages (English, German, French, Italian, Spanish)	
- Delivery form package (with SIMATIC PCS 7 Software Media Package) License key USB stick, certificate of license, software DVDs and certificate of license for SIMATIC PCS 7 Software Media Package V8.0	**6ES7652-3AX08-2YE0**
- Delivery form online (without SIMATIC PCS 7 Software Media Package) License key download, online certificate of license Note: E-mail address required!	**6ES7652-3AX08-2YK0**
• ASIA, 2 languages (English, Chinese)	
- Delivery form package (with SIMATIC PCS 7 Software Media Package ASIA) 2 x ASIA license key USB hardlock, certificate of license, software DVDs and certificate of license for SIMATIC PCS 7 Software Media Package ASIA V8.0	**6ES7652-3AX08-2CE0**

	Article No.
SIMATIC PCS 7 OS Server Upgrade Package V7.1 to V8.0 For OS Server, software class A, runs with Windows Server 2003 R2 Standard 32-bit, Windows Server 2008 Standard 32-bit, or Windows Server 2008 R2 Standard 64-bit, single license for 1 installation	
• 5 languages (English, German, French, Italian, Spanish)	
- Delivery form package (with SIMATIC PCS 7 Software Media Package) License key USB stick, certificate of license, software DVDs and certificate of license for SIMATIC PCS 7 Software Media Package V8.0	**6ES7658-2BX08-0YE0**
- Delivery form online (without SIMATIC PCS 7 Software Media Package) License key download, online certificate of license Note: E-mail address required!	**6ES7658-2BX08-0YK0**
• ASIA, 2 languages (English, Chinese)	
- Delivery form package (with SIMATIC PCS 7 Software Media Package ASIA) ASIA license key USB hardlock, certificate of license, software DVDs and certificate of license for SIMATIC PCS 7 Software Media Package ASIA V8.0	**6ES7658-2BX08-0CE0**
SIMATIC PCS 7 OS Server Redundancy Upgrade Package V7.1 to V8.0 For OS Server Redundancy, software class A, runs with Windows Server 2003 R2 Standard 32-bit, Windows Server 2008 Standard 32-bit, or Windows Server 2008 R2 Standard 64-bit, single license for 2 installations	
• 5 languages (English, German, French, Italian, Spanish)	
- Delivery form package (with SIMATIC PCS 7 Software Media Package) License key USB stick, certificate of license, software DVDs and certificate of license for SIMATIC PCS 7 Software Media Package V8.0	**6ES7652-3BX08-2YE0**
- Delivery form online (without SIMATIC PCS 7 Software Media Package) License key download, online certificate of license Note: E-mail address required!	**6ES7652-3BX08-2YK0**
• ASIA, 2 languages (English, Chinese)	
- Delivery form package (with SIMATIC PCS 7 Software Media Package ASIA) 2 x ASIA license key USB hardlock, certificate of license, software DVDs and certificate of license for SIMATIC PCS 7 Software Media Package ASIA V8.0	**6ES7652-3BX08-2CE0**
SIMATIC PCS 7 OS Client/ SFC Visualization Upgrade Package V7.1 to V8.0 Software class A, runs with Windows XP Professional 32-bit, Windows 7 Ultimate 32/64-bit, Windows Server 2003 R2 Standard 32-bit, Windows Server 2008 Standard 32-bit, or Windows Server 2008 R2 Standard 64-bit, floating license for 1 user	

Ordering data	Article No.
• 5 languages (English, German, French, Italian, Spanish)	
- Delivery form package (without SIMATIC PCS 7 Software Media Package) License key USB stick, certificate of license	6ES7652-5CX08-0YF5
- Delivery form online (without SIMATIC PCS 7 Software Media Package) License key download, online certificate of license Note: E-mail address required!	6ES7652-5CX08-0YK5
• ASIA, 2 languages (English, Chinese)	
- Delivery form package (without SIMATIC PCS 7 Software Media Package ASIA) ASIA license key USB hardlock, certificate of license	6ES7652-5CX08-0CF5

	Article No.
OS archiving	
StoragePlus	
Note: The SIMATIC PCS 7 StoragePlus Upgrade from StoragePlus V7.1 to V8.0 is part of the following upgrade packages: • SIMATIC PCS 7 OS Single Station Upgrade Package V7.1 to V8.0 • SIMATIC PCS 7 OS Single Station Redundancy Upgrade Package V7.1 to V8.0 • SIMATIC PCS 7 OS Server Upgrade Package V7.1 to V8.0 • SIMATIC PCS 7 OS Server Redundancy Upgrade Package V7.1 to V8.0	
Central Archive Server (CAS)	
SIMATIC PCS 7 Central Archive Server Basic Upgrade Package V7.1 to V8.0 Software class A, runs with Windows Server 2003 R2 Standard 32-bit, single license for 1 installation	
• 5 languages (English, German, French, Italian, Spanish)	
- Delivery form package (without SIMATIC PCS 7 Software Media Package) License key USB stick, certificate of license	6ES7658-2FX08-2YF0
- Delivery form online (without SIMATIC PCS 7 Software Media Package) License key download, online certificate of license Note: E-mail address required!	6ES7658-2FX08-2YK0
• ASIA, 2 languages (English, Chinese)	
- Delivery form package (without SIMATIC PCS 7 Software Media Package ASIA) ASIA license key USB hardlock, certificate of license	6ES7658-2FX08-2CF0
Web option for OS	
SIMATIC PCS 7 Web Server Upgrade Package V7.1 to V8.0 For SIMATIC PCS 7 Web Server, SIMATIC PCS 7 Web Diagnostics Server, SIMATIC PCS 7 Web Diagnostics Client, 6 languages (English, German, French, Italian, Spanish, Chinese), software class A, runs with Windows Server 2003 R2 Standard 32-bit, Windows Server 2008 Standard 32-bit or Windows Server 2008 R2 Standard 64-bit (Web Server/Web Diagnostics Server) or Windows XP Professional 32-bit or Windows 7 Ultimate 32/64-bit (Web Diagnostics Client), single license for 1 installation	
• Delivery form package (without SIMATIC PCS 7 Software Media Package) License key USB stick, certificate of license	6ES7652-5DX08-0YF0
• Delivery form online (without SIMATIC PCS 7 Software Media Package) License key download, online certificate of license Note: E-mail address required!	6ES7652-5DX08-0YK0

Overview

Maintenance Station Upgrade Package

Using the SIMATIC PCS 7 Maintenance Station Upgrade Package, you can upgrade the SIMATIC PCS 7 Maintenance Station Runtime Basic Package as well as the SIMATIC PCS 7 Maintenance Station Engineering from V7.1 to V8.0. The SNMP OPC server license is also taken into account for the upgrade.

The SIMATIC PCS 7 Maintenance Station Runtime licenses introduced with SIMATIC PCS 7 V7.1 are no longer associated with a specific SIMATIC PCS 7 version. The cumulative asset TAGs of existing SIMATIC PCS 7 Maintenance Station Runtime licenses therefore continue to be available following the upgrade.

Ordering data	Article No.
SIMATIC PCS 7 Maintenance Station Upgrade Package V7.1 to V8.0 For installation on SIMATIC PCS 7 BOX, single station or server 6 languages (English, German, French, Italian, Spanish, Chinese), software class A, runs with Windows XP Professional 32-bit, Windows 7 Ultimate 32/64-bit, Windows Server 2003 R2 Standard 32-bit, Windows Server 2008 Standard 32-bit, or Windows Server 2008 R2 Standard 64-bit, single license for 1 installation	
• Delivery form package (without SIMATIC PCS 7 Software Media Package) License key USB stick, certificate of license	**6ES7652-5FX08-0YF0**
• Delivery form online (without SIMATIC PCS 7 Software Media Package) License key download, online certificate of license Note: E-mail address required!	**6ES7652-5FX08-0YK0**

SIMATIC BATCH Upgrade Packages

Upgrades combined in two packages enable upgrading of existing SIMATIC BATCH systems from V7.0 or V7.1 to V8.0.

Note:

SIMATIC BATCH V7.0 and SIMATIC BATCH V7.1 are identical in their functions. Therefore, both versions can be upgraded with the following upgrade packages.

SIMATIC BATCH Server Upgrade Package

The SIMATIC BATCH Server Upgrade Package contains upgrade licenses for

- SIMATIC BATCH Server (including all UNIT options and PowerPacks)
- SIMATIC BATCH Recipe System
- SIMATIC BATCH Hierarchical Recipe
- SIMATIC BATCH Separation Procedures/Formulas
- SIMATIC BATCH ROP Library
- SIMATIC BATCH BatchCC
- SIMATIC BATCH API

SIMATIC BATCH Client Upgrade Package

The SIMATIC BATCH Client Upgrade Package contains upgrade licenses for:

- SIMATIC BATCH Recipe System
- SIMATIC BATCH Batch Planning
- SIMATIC BATCH BatchCC

The SIMATIC BATCH UNITs (instances of plant units) are converted to cumulative "Count Relevant Licenses" during the upgrade. The number of the existing UNITs is retained in this case.

Ordering data	Article No.
SIMATIC BATCH Server Upgrade Package V7.x to V8.0 6 languages (English, German, French, Italian, Spanish, Chinese), software class A, runs with Windows XP Professional 32-bit, Windows 7 Ultimate 32/64-bit, Windows Server 2003 R2 Standard 32-bit, Windows Server 2008 Standard 32-bit, or Windows Server 2008 R2 Standard 64-bit, single license for 1 installation	
• Delivery form package (without SIMATIC PCS 7 Software Media Package) License key USB stick, certificate of license	**6ES7657-5XX08-0YF0**
• Delivery form online (without SIMATIC PCS 7 Software Media Package) License key download, online certificate of license Note: E-mail address required!	**6ES7657-5XX08-0YK0**
SIMATIC BATCH Client Upgrade Package V7.x to V8.0 6 languages (English, German, French, Italian, Spanish, Chinese), software class A, runs with Windows XP Professional 32-bit, Windows 7 Ultimate 32/64-bit, Windows Server 2003 R2 Standard 32-bit, Windows Server 2008 Standard 32-bit, or Windows Server 2008 R2 Standard 64-bit, floating license for 1 user	
• Delivery form package (without SIMATIC PCS 7 Software Media Package) License key USB stick, certificate of license	**6ES7657-5XX08-0YF5**
• Delivery form online (without SIMATIC PCS 7 Software Media Package) License key download, online certificate of license Note: E-mail address required!	**6ES7657-5XX08-0YK5**

Overview

SIMATIC Route Control Upgrade Package

You can use the SIMATIC Route Control Upgrade Package V7.x to V8.0 to upgrade the Route Control Engineering, Route Control Server and Route Control Center from V7.0 or V7.1 to V8.0. The SIMATIC Route Control Center Upgrade V7.x to V8.0 (only available online) allows separate upgrading of the Route Control Center software from V7.0 or V7.1 to V8.0.

Note:

Since SIMATIC Route Control V7.0 and SIMATIC Route Control V7.1 are functionally identical, the SIMATIC Route Control Upgrade Package V7.x to V8.0 and SIMATIC Route Control Center Upgrade V7.x to V8.0 can be used for both versions.

During the upgrade, the "Routes" (quantity option for the number of simultaneous material transports) are converted in cumulative "Count Relevant Licenses". The number of the existing "Routes" is retained in this case.

Ordering data	Article No.
SIMATIC Route Control Upgrade Package V7.x to V8.0 6 languages (English, German, French, Italian, Spanish, Chinese), software class A, runs with Windows XP Professional 32-bit, Windows 7 Ultimate 32/64-bit, Windows Server 2003 R2 Standard 32-bit, Windows Server 2008 Standard 32-bit, or Windows Server 2008 R2 Standard 64-bit, single license for 1 installation	
• Delivery form package (without SIMATIC PCS 7 Software Media Package) License key USB stick, certificate of license	**6ES7652-5BX08-0YF0**
• Delivery form online (without SIMATIC PCS 7 Software Media Package) License key download, online certificate of license Note: E-mail address required!	**6ES7652-5BX08-0YK0**
SIMATIC Route Control Center Upgrade V7.x to V8.0 6 languages (English, German, French, Italian, Spanish, Chinese), software class A, runs with Windows XP Professional 32-bit, Windows 7 Ultimate 32/64-bit, Windows Server 2003 R2 Standard 32-bit, Windows Server 2008 Standard 32-bit or Windows Server 2008 R2 Standard 64-bit, floating license for 1 user	
• Delivery form online (without SIMATIC PCS 7 Software Media Package) License key download, online certificate of license Note: E-mail address required!	**6ES7658-7EX08-0YK5**

SIMATIC PCS 7 TeleControl Upgrade Package

You can use the SIMATIC PCS 7 TeleControl Upgrade Package V7.1 to V8.0 to upgrade the SIMATIC PCS 7 TeleControl software included in the software products of the SIMATIC PCS 7 TeleControl V7.1 product range to V8.0. The SIMATIC PCS 7 ES and OS Software V7.1 combined in certain software products can be upgraded separately to V8.0 using the upgrade packages in the chapters "Upgrades for engineering system" and "Upgrades for operator system".

Ordering data	Article No.
SIMATIC PCS 7 TeleControl Upgrade Package V7.1 to V8.0 Software package without SIMATIC PCS 7 ES/OS Software V8.0 2 languages (English, German), software class A, runs with Windows XP Professional 32-bit, Windows 7 Ultimate 32/64-bit, Windows Server 2003 R2 Standard 32-bit or Windows Server 2008 R2 Standard 64-bit; single license for 1 installation Note: SIMATIC PCS 7 ES and OS software V7.1 included in certain software packages must be upgraded to V8.0 using separate upgrade packages.	
• Delivery form package (without SIMATIC PCS 7 Software Media Package) DVD "PCS 7 TeleControl V8.0", license key on USB stick, certificate of license and product information	**6ES7652-5GX08-0YE0**

Overview

SIMATIC PCS 7 engineering systems with Engineering Software V6.x or V7.0 can be upgraded to Version 7.1 using the SIMATIC PCS 7 Engineering Upgrade Package. The SIMATIC PCS 7 Engineering Upgrade Packages V6.x to V7.1 and V7.0 to V7.1 are each available in two versions:

- SIMATIC PCS 7 Engineering Upgrade Package AS/OS, 250 to 2 000 POs (with OS Runtime license for productive operation)
- SIMATIC PCS 7 Engineering Upgrade Package AS/OS, unlimited POs (with OS Runtime license for productive operation)

Engineering Upgrade Package V7.0 to V7.1

The licenses included in the Engineering Upgrade Package V7.0 to V7.1 apply to the following software components of SIMATIC PCS 7 version 7.0:

- PCS 7 Engineering AS, OS, AS/OS (250 POs to 2 000 POs)[1)]
  or
  PCS 7 Engineering AS, OS, AS/OS (POs unlimited)[1)]
- PCS 7 Import/Export Assistant
- Version Cross Manager
- Version Trail
- PCS 7 SFC Visualization
- WinCC Redundancy
- PCS 7 AS Runtime License (AS Runtime PO)
- PCS 7 BCE
- SIMATIC NET S7-1613 for Industrial Ethernet

Engineering Upgrade Package V6.x to V7.1

The licenses included in the Engineering Upgrade Package V6.x to V7.1 apply to the following software components of SIMATIC PCS 7 version 6.0/6.1:

- PCS 7 Engineering AS, OS, AS/OS (250 POs to 2 000 POs) or PCS 7 Engineering AS, OS, AS/OS (unlimited POs)
- PCS 7 Import/Export Assistant
- Version Cross Checker
- Version Trail
- PCS 7 PID-Tuner
- PCS 7 SFC Visualization
- WinCC Redundancy
- PCS 7 BCE
- SIMATIC NET S7-1613 for Industrial Ethernet

Note:

The PO Upgrade licenses included in the SIMATIC PCS 7 Engineering Upgrade Package V6.x to V7.1 convert the POs of the CFC licenses counted in SIMATIC PCS 7 V6.x into AS Runtime licenses. Corresponding to the scope of the CFC license of your PCS 7 Engineering Software V6.x (250 POs, 1 000 POs, 2 000 POs, 3 000 POs, 5 000 POs or 8 500 POs), you have the identical number of AS Runtime POs in each case for AS Runtime operation following the upgrade to V7.1.

[1)] The SIMATIC PCS 7 engineering upgrade packages AS/OS V7.0 to V7.1, order no. 6ES7651-5AC17-0YH5 and 6ES7651-5AF17-0YH5, require that the licenses of the existing AS runtime POs have already been updated in accordance with SIMATIC PCS 7 V7.0+SP1. If this requirement is not met, you can order a "License Upgrade Package" for upgrading your AS runtime PO using Order no. S79220-A9438-P:

AS Runtime POs corresponding with SIMATIC PCS 7 V7.0+SP1 are also valid for SIMATIC PCS 7 V7.1. These AS Runtime POs can be used in SIMATIC PCS 7 V7.1 without a license upgrade.

Ordering data

	Article No.
Engineering software	
Engineering software upgrade from V7.0 to V7.1	
SIMATIC PCS 7 Engineering Upgrade Package AS/OS V7.0 to V7.1 Software class A, runs with Windows XP Professional, floating license for 1 user	
5 languages (English, German, French, Italian, Spanish) Delivery form package (with SIMATIC PCS 7 Software Media Package): License key on USB stick, certificate of license as well as SIMATIC PCS 7 Software Media Package V7.1	
• 250 to 2 000 POs[1)] (with OS Runtime license for productive operation)	**6ES7651-5AC17-0YH5**
• Unlimited POs[1)] (without OS Runtime license for productive operation)	**6ES7651-5AF17-0YH5**
ASIA, 2 languages (English, Chinese) Delivery form package (with SIMATIC PCS 7 Software Media Package ASIA): ASIA license key USB hardlock, certificate of license as well as SIMATIC PCS 7 Software Media Package ASIA V7.1	
• 250 to 2 000 POs (with OS Runtime license for productive operation)	**6ES7651-5AC17-0CH5**
• Unlimited POs (without OS Runtime license for productive operation)	**6ES7651-5AF17-0CH5**
Upgrade of engineering software from V6.0/V6.1 to V7.1	
SIMATIC PCS 7 Engineering Upgrade Package AS/OS V6.x to V7.1 Software class A, runs with Windows XP Professional, floating license for 1 user	
5 languages (English, German, French, Italian, Spanish) Delivery form package (with SIMATIC PCS 7 Software Media Package): License key on USB stick, certificate of license as well as SIMATIC PCS 7 Software Media Package V7.1	
• 250 to 2 000 POs (with OS Runtime license for productive operation)	**6ES7651-5AC17-0YE5**
• Unlimited POs (without OS Runtime license for productive operation)	**6ES7651-5AF17-0YE5**
ASIA, 2 languages (English, Chinese) Delivery form package (with SIMATIC PCS 7 Software Media Package ASIA): ASIA license key USB hardlock, certificate of license as well as SIMATIC PCS 7 Software Media Package ASIA V7.1	
• 250 to 2 000 POs (with OS Runtime license for productive operation)	**6ES7651-5AC17-0CE5**
• Unlimited POs (without OS Runtime license for productive operation)	**6ES7651-5AF17-0CE5**

Overview

Upgrades combined in packages permit upgrading of existing operator systems V6.x or V7.0 to V7.1.

Upgrades of OS software

The upgrade of the SIMATIC PCS 7 OS Software V6.x to V7.1 and V7.0 to V7.1 is divided on the following OS Upgrade Packages in each case:

- SIMATIC PCS 7 OS Single Station Upgrade Package
- SIMATIC PCS 7 OS Server Upgrade Package
- SIMATIC PCS 7 OS Client/SFC Visualization Upgrade Package

This permits archiving according to the number of existing process objects and archive variables.

Upgrade packages	**SIMATIC PCS 7 OS Single Station Upgrade Package**	**SIMATIC PCS 7 OS Server Upgrade Package**	**SIMATIC PCS 7 OS Client/ SFC Visualization Upgrade Package**
Content	**for OS Single Stations**	**for OS Server and central archive server**	**for OS clients**
PCS 7 OS Software Single Station (all PO versions)	●		
PCS 7 OS Software Server (all PO versions)		●	
PCS 7 OS Software Client			●
Central archive server basic package		●	
PCS 7 Archive (archive TAGs)	●	●	
PCS 7 StoragePlus	●	●	
PCS 7 SFC Visualization	●	●	●
WinCC Redundancy	●	●	
PCS 7 BCE	●	●	
SIMATIC NET S7-1613 for Industrial Ethernet	●	●	
PCS 7 OpenPCS 7 Server/OS Client (multi-functional)	●	●	
PCS 7 OpenPCS 7 Server (stand-alone)	●	●	

Upgrade of OS long-term archiving

SIMATIC PCS 7 Upgrade StoragePlus

- The SIMATIC PCS 7 Upgrade StoragePlus V1.0/V1.1 to V1.3 is part of the SIMATIC PCS 7 OS Single Station Upgrade Package V6.x to V7.1 and the SIMATIC PCS 7 OS Server Upgrade Package V6.x to V7.1.
- The SIMATIC PCS 7 Upgrade StoragePlus V1.2 to V1.3 is part of the SIMATIC PCS 7 OS Single Station Upgrade Package V7.0 to V7.1 and the SIMATIC PCS 7 OS Server Upgrade Package V7.0 to V7.1.

Central Archive Server (CAS) Upgrade

The upgrade of the central archive server (CAS) based on OS software servers and additive PCS 7 archive licenses (archive variables) is, depending on the initial version, part of the SIMATIC PCS 7 OS Server Upgrade Package V6.x to V7.1 or V7.0 to V7.1.

SIMATIC PCS 7 OS Web upgrade

Using the SIMATIC PCS 7 OS Web Server Upgrade Package, you can upgrade the SIMATIC PCS 7 Web server, SIMATIC PCS 7 Web diagnostics server and SIMATIC PCS 7 Web diagnostics clients from V6.1 to V7.1 or from V7.0 to V7.1.

Ordering data

OS software

OS Software Upgrade from V7.0 to V7.1, based on the existing number of POs	Article No.
SIMATIC PCS 7 OS Single Station Upgrade Package V7.0 to V7.1 for OS Single Station, software class A, runs with Windows XP Professional, single license for 1 installation	
• 5 languages (English, German, French, Italian, Spanish) Delivery form package (with SIMATIC PCS 7 Software Media Package): License key on USB stick, certificate of license as well as SIMATIC PCS 7 Software Media Package V7.1	**6ES7658-2AX17-0YH0**
• ASIA, 2 languages (English, Chinese) Delivery form package (with SIMATIC PCS 7 Software Media Package ASIA): ASIA license key USB hardlock, certificate of license as well as SIMATIC PCS 7 Software Media Package ASIA V7.1	**6ES7658-2AX17-0CH0**
SIMATIC PCS 7 OS Server Upgrade Package V7.0 to V7.1 for OS Server and archive server, software class A, runs with Windows Server 2003, single license for 1 installation	
• 5 languages (English, German, French, Italian, Spanish) Delivery form package (with SIMATIC PCS 7 Software Media Package): License key on USB stick, certificate of license as well as SIMATIC PCS 7 Software Media Package V7.1	**6ES7658-2BX17-0YH0**
• ASIA, 2 languages (English, Chinese) Delivery form package (with SIMATIC PCS 7 Software Media Package ASIA): ASIA license key USB hardlock, certificate of license as well as SIMATIC PCS 7 Software Media Package ASIA V7.1	**6ES7658-2BX17-0CH0**
SIMATIC PCS 7 OS Client/ SFC Visualization Upgrade Package V7.0 to V7.1 Software class A, runs with Windows XP Professional, floating license for 1 user	
• 5 languages (English, German, French, Italian, Spanish) Delivery form package (without SIMATIC PCS 7 Software Media Package): License key on USB stick, certificate of license	**6ES7652-5CX17-0YH5**
• ASIA, 2 languages (English, Chinese) Delivery form package (without SIMATIC PCS 7 Software Media Package ASIA): ASIA license key USB hardlock, certificate of license	**6ES7652-5CX17-0CH5**

OS Software Upgrade from V6.0/ V6.1 to V7.1, based on the existing number of POs	Article No.
SIMATIC PCS 7 OS Single Station Upgrade Package V6.x to V7.1 for OS Single Station, software class A, runs with Windows XP Professional, single license for 1 installation	
• 5 languages (English, German, French, Italian, Spanish) Delivery form package (with SIMATIC PCS 7 Software Media Package): License key on USB stick, certificate of license as well as SIMATIC PCS 7 Software Media Package V7.1	**6ES7658-2AX17-0YE0**
• ASIA, 2 languages (English, Chinese) Delivery form package (with SIMATIC PCS 7 Software Media Package ASIA): ASIA license key USB hardlock, certificate of license as well as SIMATIC PCS 7 Software Media Package ASIA V7.1	**6ES7658-2AX17-0CE0**
SIMATIC PCS 7 OS Server Upgrade Package V6.x to V7.1 for OS Server and archive server, software class A, runs with Windows Server 2003, single license for 1 installation	
• 5 languages (English, German, French, Italian, Spanish) Delivery form package (with SIMATIC PCS 7 Software Media Package): License key on USB stick, certificate of license as well as SIMATIC PCS 7 Software Media Package V7.1	**6ES7658-2BX17-0YE0**
• ASIA, 2 languages (English, Chinese) Delivery form package (with SIMATIC PCS 7 Software Media Package ASIA): ASIA license key USB hardlock, certificate of license as well as SIMATIC PCS 7 Software Media Package ASIA V7.1	**6ES7658-2BX17-0CE0**
SIMATIC PCS 7 OS Client/ SFC Visualization Upgrade Package V6.x to V7.1 Software class A, runs with Windows XP Professional, floating license for 1 user	
• 5 languages (English, German, French, Italian, Spanish) Delivery form package (without SIMATIC PCS 7 Software Media Package): License key on USB stick, certificate of license	**6ES7652-5CX17-0YE5**
• ASIA, 2 languages (English, Chinese) Delivery form package (without SIMATIC PCS 7 Software Media Package ASIA): ASIA license key USB hardlock, certificate of license	**6ES7652-5CX17-0CE5**

Ordering data

OS long-term archiving

	Article No.
SIMATIC PCS 7 Upgrade StoragePlus Note: • The SIMATIC PCS 7 Upgrade StoragePlus V1.0/V1.1 to V1.3 is part of the SIMATIC PCS 7 OS Single Station Upgrade Package V6.x to V7.1 and the SIMATIC PCS 7 OS Server Upgrade Package V6.x to V7.1. • The SIMATIC PCS 7 Upgrade StoragePlus V1.2 to V1.3 is part of the SIMATIC PCS 7 OS Single Station Upgrade Package V7.0 to V7.1 and the SIMATIC PCS 7 OS Server Upgrade Package V7.0 to V7.1.	
Upgrade of Central Archive Server (CAS) Note: • The upgrade of the central archive server (CAS) from V6.0/V6.1 to V7.1 is part of the SIMATIC PCS 7 OS Server Upgrade Package V6.x to V7.1. • The upgrade of the central archive server (CAS) from V7.0 to V7.1 is part of the SIMATIC PCS 7 OS Server Upgrade Package V7.0 to V7.1.	

OS Web Upgrade Package

	Article No.
OS Web Upgrade Package V7.0 to V7.1	
SIMATIC PCS 7 OS Web Server Upgrade Package V7.0 to V7.1 for SIMATIC PCS 7 Web server, SIMATIC PCS 7 Web diagnostics server, SIMATIC PCS 7 Web diagnostics client, 6 languages (English, German, French, Italian, Spanish, Chinese), software class A, runs with Windows Server 2003 or Windows XP Professional (web diagnostics client), single license for 1 installation Delivery form package (without SIMATIC PCS 7 Software Media Package): License key on USB stick, certificate of license	**6ES7652-5DX17-0YJ0**
OS Web Upgrade Package V6.1 to V7.1	
SIMATIC PCS 7 OS Web Server Upgrade Package V6.1 to V7.1 for SIMATIC PCS 7 Web server, SIMATIC PCS 7 Web diagnostics server, SIMATIC PCS 7 Web diagnostics client, 6 languages (English, German, French, Italian, Spanish, Chinese), software class A, runs with Windows Server 2003 or Windows XP Professional (web diagnostics client), single license for 1 installation Delivery form package (without SIMATIC PCS 7 Software Media Package): License key on USB stick, certificate of license	**6ES7652-5DX17-0YF0**

Overview

SIMATIC BATCH Upgrade from V6.x to V7.1

The following two SIMATIC BATCH Upgrade Packages permit upgrading of the SIMATIC BATCH Software V6.x to V7.1 depending on the number of existing batch process objects (Batch POs):

SIMATIC BATCH Client Upgrade Package

The SIMATIC BATCH Client Upgrade Package contains upgrade licenses for:

- SIMATIC BATCH Recipe System
- SIMATIC BATCH Batch Planning
- SIMATIC BATCH BatchCC

SIMATIC BATCH Server Upgrade Package

The SIMATIC BATCH Server Upgrade Package contains upgrade licenses for

- SIMATIC BATCH Server (including all PO options and PowerPacks)
- SIMATIC BATCH Hierarchical Recipe
- SIMATIC BATCH ROP Library
- SIMATIC BATCH Separation Procedures/Formulas
- SIMATIC BATCH API

When upgrading, the existing Batch POs are converted into UNITs (instances of plant units). One UNIT corresponds to 15 Batch POs.

SIMATIC BATCH Upgrade from V7.0 to V7.1

You do not require any special upgrade packages for upgrading from SIMATIC BATCH V7.0 to V7.1. Since SIMATIC BATCH is completely integrated in SIMATIC PCS 7, the SIMATIC BATCH V7.1 software is available anyway with the SIMATIC PCS 7 Software Media Packages of the ES/OS upgrade packages.

In addition to the V7.1 licenses, the existing V7.0 licenses are also authorized for licensing of the SIMATIC BATCH V7.1 software.

The Certificate of License for SIMATIC BATCH V7.0 is also valid for SIMATIC BATCH V7.1.

Ordering data

	Article No.
SIMATIC BATCH Upgrades V7.0 to V7.1 No special upgrade packages are required for upgrading from SIMATIC BATCH V7.0 to V7.1. The SIMATIC BATCH V7.1 software is available with the SIMATIC PCS 7 Software Media Packages of the ES/OS upgrade packages. The existing V7.0 licenses are authorized for licensing.	
SIMATIC BATCH Upgrade Packages V6.0/V6.1 to V7.1, based on the existing number of POs	
SIMATIC BATCH Client Upgrade Package V6.x to V7.1 6 languages (English, German, French, Italian, Spanish, Chinese), software class A, runs with Windows XP Professional or Windows Server 2003, floating license for 1 user Delivery form package (without SIMATIC PCS 7 Software Media Package): License key on USB stick, certificate of license	**6ES7657-5XX17-0YF5**
SIMATIC BATCH Server Upgrade Package V6.x to V7.1 6 languages (English, German, French, Italian, Spanish, Chinese), software class A, runs with Windows XP Professional or Windows Server 2003, single license for 1 installation Delivery form package (without SIMATIC PCS 7 Software Media Package): License key on USB stick, certificate of license	**6ES7657-5XX17-0YF0**

Overview

SIMATIC Route Control Upgrade from V6.x to V7.1

You can use the SIMATIC Route Control Upgrade Package V6.x to V7.1 to upgrade the Route Control Engineering, Route Control Server and Route Control Client software components from V6.0 or V6.1 to V7.1. The BCE license PCS 7 BCE and SIMATIC NET S7-1613 for Industrial Ethernet are also involved in the Upgrade Package.

SIMATIC Route Control Upgrade from V7.0 to V7.1

You do not require any special upgrade packages for upgrading from SIMATIC Route Control V7.0 to V7.1. Since SIMATIC Route Control is completely integrated in SIMATIC PCS 7, the SIMATIC Route Control V7.1 software is available anyway with the SIMATIC PCS 7 Software Media Packages of the ES/OS upgrade packages.

In addition to the V7.1 licenses, the existing V7.0 licenses are also authorized for licensing of the SIMATIC Route Control V7.1 software.

The Certificate of License for SIMATIC Route Control V7.0 is also valid for SIMATIC Route Control V7.1.

Ordering data	Article No.
SIMATIC Route Control Upgrade Package V7.0 to V7.1 No special upgrade packages are required for upgrading from SIMATIC Route Control V7.0 to V7.1. The SIMATIC Route Control V7.1 software is available with the SIMATIC PCS 7 Software Media Packages of the ES/OS upgrade packages. The existing V7.0 licenses are authorized for licensing.	
SIMATIC Route Control Upgrade Package V6.0/6.1 to V7.1	
SIMATIC Route Control Upgrade Package V6.x to V7.1 for Route Control Engineering, Route Control Server and Route Control Center, suitable for single station and client/server configuration 6 languages (English, German, French, Italian, Spanish, Chinese), software class A, runs with Windows XP Professional or Windows Server 2003, single license for 1 installation Delivery form package (without SIMATIC PCS 7 Software Media Package) License key on USB stick, certificate of license	**6ES7652-5BX17-0YF0**

Overview

SIMATIC PCS 7 Maintenance Station Upgrade

With a SIMATIC PCS 7 Maintenance Station Upgrade Package matching the initial version, you can upgrade SIMATIC PCS 7 Asset Engineering as well as all TAG versions of SIMATIC PCS 7 Asset Runtime from V6.1 or V7.0 to V7.1. The respective SNMP OPC server license is also involved.

SIMATIC PCS 7 Maintenance Station Upgrade V7.0 to V7.1

The SIMATIC PCS 7 Maintenance Station Runtime licenses introduced with SIMATIC PCS 7 V7.1 are no longer associated with a specific SIMATIC PCS 7 version. However, they cannot be used retrospectively with SIMATIC PCS 7 V6.1 and V7.0.

In the case of a Maintenance Station upgrade from V7.0 to V7.1, you must convert the Runtime licenses for 10/100/1000 asset TAGs (Count Relevant Licenses) purchased with the "SIMATIC PCS 7 Asset Runtime Basic Package V7.0" and "SIMATIC PCS 7 Asset Runtime V7.0" products into corresponding SIMATIC PCS 7 Maintenance Station Runtime licenses. We offer the Maintenance Station RT update package, order no. S79220-B1454-P, for this conversion. With a Maintenance Station RT update package, you can convert 10 x 10, 10 x 100 and 10 x 1 000 asset TAGs respectively.

SIMATIC PCS 7 Maintenance Station Upgrade V6.1 to V7.1

The Update Package Maintenance Station RT, Order no. S79220-B1454-P, is not relevant to the Maintenance Station Upgrade from V6.1 to V7.1. Since the runtime licenses of SIMATIC PCS 7 Asset Runtime V6.1 are not of the Count Relevant License type, their conversion can be carried out using the "SIMATIC PCS 7 Maintenance Station Upgrade Package V6.1 to V7.1".

Ordering data

	Article No.
SIMATIC PCS 7 Maintenance Station Upgrade V7.0 to V7.1	
SIMATIC PCS 7 Maintenance Station Upgrade Package V7.0 to V7.1 for Asset Engineering and Asset Runtime, 6 languages (English, German, French, Italian, Spanish, Chinese), software class A, runs on Windows XP Professional or Windows Server 2003, single license for 1 installation Delivery form package (without SIMATIC PCS 7 Software Media Package) License key on USB stick, certificate of license	**6ES7652-5FX17-0YJ0**
SIMATIC PCS 7 Maintenance Station Update Package RT For converting the runtime licenses for 10/100/1000 asset TAGs (Count Relevant Licenses) supplied with the SIMATIC PCS 7 Asset Runtime Basic Package V7.0 and SIMATIC PCS 7 Asset Runtime V7.0 products, 6 languages (English, German, French, Italian, Spanish, Chinese), software class A, runs on Windows XP Professional or Windows Server 2003, single license for 1 installation Delivery form package (without SIMATIC PCS 7 Software Media Package) License key on USB stick, certificate of license	**S79220-B1454-P**
SIMATIC PCS 7 Maintenance Station Upgrade V6.1 to V7.1	
SIMATIC PCS 7 Maintenance Station Upgrade Package V6.1 to V7.1 for Asset Engineering and Asset Runtime, 6 languages (English, German, French, Italian, Spanish, Chinese), software class A, runs on Windows XP Professional or Windows Server 2003, single license for 1 installation Delivery form package (without SIMATIC PCS 7 Software Media Package) License key on USB stick, certificate of license	**6ES7652-5FX17-0YF0**

Overview

SIMATIC Logon is a central user administration system with access control which was introduced into the process control system as of SIMATIC PCS 7 V6.0. Up to and including V6.1, SIMATIC Logon was offered in the form of separate products whose version cycle was asynchronous to the version cycle of SIMATIC PCS 7.

As of SIMATIC PCS 7 V7.0, the SIMATIC Logon software and licenses are fully integrated in the process control system. Since then, updating is carried out synchronous with SIMATIC PCS 7.

With the online compatibility tool, you can determine the SIMATIC Logon versions that are suitable for the various SIMATIC PCS 7 versions:

https://support.industry.siemens.com/cs/de/en/view/64847781

Ordering data	Article No.
SIMATIC Logon Upgrade to V1.5 7 languages (English, German, French, Italian, Spanish, Chinese and Japanese), software class A Runs with the following operating systems • Windows Vista (Business/Enterprise/Ultimate) up to SP2 32/64-bit • Windows 7 (Professional/Enterprise/Ultimate) up to SP1 32/64-bit • Windows 8.0 (Standard/Pro/Enterprise) 32/64-bit • Windows 8.1 (Standard/Pro/Enterprise) 32/64-bit • Windows 10 Enterprise 2015 LTSB 64-bit • Windows Server 2003 SP1/SP2 32-bit • Windows Server 2003 R2/2003 R2 SP2 32-bit • Windows Server 2008 (Standard/Enterprise/Datacenter) up to SP2 32/64-bit • Windows Server 2008 R2 (Standard/Enterprise/Datacenter) up to SP1 64-bit • Windows Server 2012 (Foundation/Essentials/Standard/Datacenter) 64-bit • Windows Server 2012 R2 (Essentials/Standard/Datacenter) 64-bit Single license for 1 installation Physical delivery: License key on USB flash drive, certificate of license, software and electronic documentation on CD	**6ES7658-7BX51-0YE0**

Upgrades for SIMATIC PDM

Overview

SIMATIC PDM can be integrated in the engineering system, i.e. in the configuration environment of SIMATIC PCS 7, or operated in stand-alone mode. The version cycle of SIMATIC PDM is asynchronous to the version cycle of SIMATIC PCS 7:

The following overview shows some of the SIMATIC PDM versions and the compatible SIMATIC PCS 7 versions:

SIMATIC PDM version	Compatible SIMATIC PCS 7 version
V9.0	V8.2 V8.1, V8.1+SP1 V8.0+SP2 (without Communication FOUNDATION Fieldbus)
V8.2	V8.0+SP2, V8.1, V8.1+SP1
V8.1	V8.0, V8.0+SP1/SP2
V6.1	V6.1, V7.1 and V8.0

The compatibility tool on the Internet provides detailed information on how the various SIMATIC PCS 7 versions correlate with the versions of SIMATIC PDM:

https://support.industry.siemens.com/cs/de/en/view/64847781

Existing installations with SIMATIC PDM V7.0 can only be upgraded to version 9.0 by first upgrading to version 8.0. Projects based on SIMATIC PDM V6.x or V8.x (including SP in each case) can be upgraded directly to V9.0 with upgrade packages. Alternatively, an upgrade is also possible via the Software Update Service (for details, see "Software Media and Logistics" chapter, "Software Update Service" section).

Two upgrade packages are offered for SIMATIC PDM V8.x:

- SIMATIC PDM Upgrade Package Basic[1)] (with/without SIMATIC PDM HART Server) for configurations based on:
  - SIMATIC PDM Basic
  - SIMATIC PDM Service
  - SIMATIC PDM S7
  - SIMATIC PDM PCS 7
- SIMATIC PDM Upgrade Package Complete[1)] for configurations based on:
  - SIMATIC PDM PCS 7 Server
  - SIMATIC PDM PCS 7-FF

1) Optional product components for SIMATIC PDM such as PDM Extended, PDM Integration in STEP 7/PCS 7, PDM Routing, PDM Server and PDM Communication FOUNDATION Fieldbus are each included in a product package listed in the SIMATIC PDM Upgrade Package Basic or SIMATIC PDM Upgrade Package Complete and are implicitly authorized to be updated via the corresponding license. The SIMATIC PDM Upgrade Package Complete is required for use of the product components PDM Server or PDM Communication FOUNDATION Fieldbus.

Ordering data

	Article No.
SIMATIC PDM upgrade/update service	
SIMATIC PDM Upgrade Package V6.x to V9.0 For product packages and optional product components of SIMATIC PDM V6.0/V6.1 6 languages (English, German, French, Italian, Spanish, Chinese), software class A, runs with Windows 7 Ultimate 32/64-bit, Windows Server 2008 R2 Standard 64-bit or Windows Server 2012 R2 Standard 64-bit, floating license for 1 user No SIMATIC PCS 7 Software Media Package	
• Physical delivery License key on USB flash drive and certificate of license, bundled with 1? × SIMATIC PDM Software Media Package per order item	**6ES7651-5CX58-0YE5**
• Online delivery License key download and online certificate of license combined with SIMATIC PDM Software Media Package (SIMATIC PDM and device library software download) Note: Email address required!	**6ES7651-5CX58-0YK5**
SIMATIC PDM Upgrade Package Basic from V8.x to V9.0 For configurations based on SIMATIC PDM Basic, Service, S7, PCS 7 (with/without SIMATIC PDM HART Server) 6 languages (English, German, French, Italian, Spanish, Chinese), software class A, runs on Windows 7 Ultimate 32/64-bit, Windows Server 2008 R2 Standard 64-bit, or Windows Server 2012 R2 Standard 64-bit, floating license for 1 user No SIMATIC PCS 7 Software Media Package	
• Physical delivery License key on USB flash drive and certificate of license, bundled with 1? × SIMATIC PDM Software Media Package per order item	**6ES7651-5EX58-0YE5**
• Online delivery License key download and online certificate of license combined with SIMATIC PDM Software Media Package (SIMATIC PDM and device library software download) Note: Email address required!	**6ES7651-5EX58-0YK5**

Ordering data

	Article No.
SIMATIC PDM Upgrade Package Complete from V8.x to V9.0 For configurations based on SIMATIC PDM PCS 7 Server, PCS 7-FF	
6 languages (English, German, French, Italian, Spanish, Chinese), software class A, runs with Windows 7 Ultimate 32/64-bit, Windows Server 2008 R2 Standard 64-bit or Windows Server 2012 R2 Standard 64-bit, single license for 1 installation	
No SIMATIC PCS 7 Software Media Package	
• Physical delivery License key on USB flash drive and certificate of license, bundled with 1? × SIMATIC PDM Software Media Package per order item	**6ES7651-5FX58-0YE5**
• Online delivery License key download and online certificate of license combined with SIMATIC PDM Software Media Package (SIMATIC PDM and device library software download) Note: Email address required!	**6ES7651-5FX58-0YK5**

	Article No.
SIMATIC PDM Upgrade from V7.0 to V8.0 For product configurations based on SIMATIC PDM PCS 7, SIMATIC PDM PCS 7-FF or SIMATIC PDM S7	
6 languages (English, German, French, Italian, Spanish, Chinese), software class A, runs with Windows 7 Ultimate 32/64-bit, Windows Server 2003 R2 Standard 32-bit or Windows Server 2008 R2 Standard 64-bit, floating license for 1 user	
No SIMATIC PCS 7 Software Media Package	
• Physical delivery SIMATIC PDM V8.0 software and device library on DVD, license key on USB flash drive, certificate of license	**6ES7651-5DX08-0YE5**
• Online delivery Software image download (SIMATIC PDM and device library), license key download, online certificate of license Note: Email address required!	**6ES7651-5DX08-0YK5**

Upgrades Safety Integrated for Process Automation

Overview

S7 F Systems and SIMATIC Safety Matrix software products can be optionally integrated in the process control system for the implementation and operation of safety applications.

The version cycle of these software components is not synchronous with that of SIMATIC PCS 7, however.

SIMATIC PCS 7 version	Compatible versions	
	S7 F Systems	Safety Matrix Tool, Safety Matrix Viewer
V8.1/V8.2	V6.1 SP2 or higher	V6.2 SP2 or higher

Compatibility tool

With the compatibility tool on the Internet you can determine the versions of S7 F Systems and SIMATIC Safety Matrix that are suitable for the various versions of SIMATIC PCS 7:

https://support.industry.siemens.com/cs/de/en/view/64847781

Ordering data

	Article No.
SIMATIC S7 F Systems	
SIMATIC S7 F Systems V6.1 Upgrade Package For S7 F Systems upgrade from V5.x/V6.0 to V6.1 (incl. SP) 2 languages (English, German), software class A, runs with Windows XP Professional 32-bit, Windows Server 2003 32-bit, Windows 7 Ultimate 32/64-bit or Windows Server 2008 R2 Standard 64-bit, floating license for 1 user No SIMATIC PCS 7 Software Media Package Note: In the case of an S7 F Systems upgrade from V5.x to V6.1, the type of S7 F Systems license changes from single license to floating license.	
• Physical delivery License key on USB flash drive and certificate of license, bundled with 1 × SIMATIC S7 F Systems Software Media Package per order item	**6ES7833-1CC02-0YE5**
• Online delivery License key download and online certificate of license combined with SIMATIC S7 F Systems Software Media Package (software download and online certificate of license) Note: Email address required!	**6ES7833-1CC02-0YK5**
Safety Matrix Tool	
SIMATIC S7 Safety Matrix Tool Upgrade Package V5.x/V6.1 to V6.2 (including SP) 2 languages (English, German), software class A, runs with Windows XP Professional 32-bit, Windows Server 2003/2003 R2 Standard 32-bit, Windows 7 Ultimate 32/64-bit or Windows Server 2008 R2 Standard 64-bit, floating license for 1 user No SIMATIC PCS 7 Software Media Package	
• Physical delivery License key on USB flash drive and certificate of license, bundled with 1 × SIMATIC S7 Safety Matrix Software Media Package per order item	**6ES7833-1SM02-0YE5**
• Online delivery License key download and online certificate of license, combined with SIMATIC S7 Safety Matrix Software Media Package (software download and online certificate of license) Note: Email address required!	**6ES7833-1SM02-0YK5**

	Article No.
Safety Matrix Viewer	
SIMATIC S7 Safety Matrix Viewer Upgrade Package V6.x to V6.2 (including SP) 2 languages (English, German), software class A, runs with Windows XP Professional 32-bit, Windows Server 2003/2003 R2 Standard 32-bit, Windows 7 Ultimate 32/64-bit or Windows Server 2008 R2 Standard 64-bit, floating license for 1 user No SIMATIC PCS 7 Software Media Package	
• Physical delivery License key on USB flash drive and certificate of license, bundled with 1 × SIMATIC S7 Safety Matrix Software Media Package per order item	**6ES7833-1SM62-0YE5**
• Online delivery License key download and online certificate of license, combined with SIMATIC S7 Safety Matrix Software Media Package (software download and online certificate of license) Note: Email address required!	**6ES7833-1SM62-0YK5**

Overview

The S7-PLCSIM software used for simulation of SIMATIC PCS 7 automation systems when debugging CFC/SFC user programs can be integrated into the engineering system, i.e. into the configuration environment of SIMATIC PCS 7. The version cycle of S7-PLCSIM is asynchronous to the version cycle of SIMATIC PCS 7.

S7-PLCSIM as of V5.4+SP5 is compatible with SIMATIC PCS 7 V8.1 and V8.2.

With the compatibility tool on the Internet you can determine which S7-PLCSIM versions are suitable for the various SIMATIC PCS 7 versions:

https://support.industry.siemens.com/cs/ww/en/view/64847781

Ordering data

Ordering data	Article No.
S7-PLCSIM upgrade from V3.x, V4.x, V5.0, V5.2 or V5.3 to V5.4 5 languages (English, German, French, Italian, Spanish), software class A, runs with Windows 7 Ultimate 32/64-bit, Windows Server 2003/2003 R2 Standard 32-bit or Windows Server 2008 R2 Standard 64-bit, floating license for 1 user No SIMATIC PCS 7 Software Media Package Physical delivery License key on USB flash drive, certificate of license, software and electronic documentation on CD	**6ES7841-0CC05-0YE5**

Overview

With SIMATIC PCS 7, communications software and licenses of SIMATIC NET are used for the system communication via Industrial Ethernet. Their version cycle is not usually synchronous with that of SIMATIC PCS 7.

The SIMATIC PCS 7 versions correspond to the SIMATIC NET products as follows:

- SIMATIC PCS 7 V8.2 with SIMATIC NET products V13
- SIMATIC PCS 7 V8.1 with SIMATIC NET products V12
- SIMATIC PCS 7 V8.0 with SIMATIC NET products:
  - V8.1 (Windows 7 Ultimate 32/64-bit or Windows Server 2008 R2 Standard 64-bit operating system)
  - V7.1 (Windows XP Professional 32-bit or Windows Server 2003 R2 Standard 32-bit operating system)
- SIMATIC PCS 7 V7.1 with SIMATIC NET products V7.1 (2008 edition)

When upgrading SIMATIC PCS 7, a separate upgrade is only required for the S7-REDCONNECT and SOFTNET-IE RNA communication software. For the other SIMATIC NET products, the version upgrade is implemented for the SIMATIC PCS 7 upgrade with SIMATIC PCS 7 Upgrade Packages.

Ordering data

	Article No.
Communication products for SIMATIC PCS 7 V8.2	
SIMATIC NET HARDNET-IE S7 V13 S7 communication software with license for up to 4 Industrial Ethernet CPs, e.g. CP 1613 A2, CP 1623, CP 1628 Runtime software, 2 languages (English, German), software class A, runs with Windows 7 Ultimate 32/64-bit, Windows Server 2008 R2 Standard 64-bit, or Windows Server 2012 R2 Standard 64-bit, single license for 1 installation No SIMATIC PCS 7 Software Media Package	
• Physical delivery Software and electronic manual on CD, license key on USB flash drive	**6GK1716-1CB13-0AA0**
• Online delivery Software and license key download Note: Email address required!	**6GK1716-1CB13-0AK0**
SIMATIC NET HARDNET-IE S7-REDCONNECT V13 S7 communication software for fail-safe S7 communication over redundant networks with license for up to 4 Industrial Ethernet CPs, e.g. CP 1613 A2, CP 1623, CP 1628 Runtime software, 2 languages (English, German), software class A, runs with Windows 7 Ultimate 32/64-bit, Windows Server 2008 R2 Standard 64-bit or Windows Server 2012 R2 Standard 64-bit, single license for 1 installation No SIMATIC PCS 7 Software Media Package	
• Physical delivery Software and electronic manual on CD, license key on USB flash drive	**6GK1716-0HB13-0AA0**
• Online delivery Software and license key download Note: Email address required!	**6GK1716-0HB13-0AK0**

	Article No.
SIMATIC NET HARDNET-IE S7-REDCONNECT PowerPack V13 For expansion of HARDNET-IE S7 communication software to HARDNET-IE S7-REDCONNECT, with license for up to 4 Industrial Ethernet CPs, e.g. CP 1613 A2, CP 1623, CP 1628 Runtime software, 2 languages (English, German), software class A, runs with Windows 7 Ultimate 32/64-bit, Windows Server 2008 R2 Standard 64-bit or Windows Server 2012 R2 Standard 64-bit, single license for 1 installation No SIMATIC PCS 7 Software Media Package	
• Physical delivery Software and electronic manual on CD, license key on USB flash drive	**6GK1716-0HB13-0AC0**
• Online delivery Software and license key download Note: Email address required!	**6GK1716-0HB13-0AK1**
SIMATIC NET SOFTNET-IE RNA V13 Software for linking of PCS 7 stations to PRP-enabled networks with integrated SNMP Runtime software, 2 languages (English, German), software class A, runs with Windows 7 Ultimate 32/64-bit, Windows Server 2008 R2 Standard 64-bit or Windows Server 2012 R2 Standard 64-bit, single license for 1 installation Physical delivery Software and electronic manual on CD, license key on USB flash drive No SIMATIC PCS 7 Software Media Package	**6GK1711-1EW13-0AA0**

Ordering data

	Article No.
Upgrades for communication software	
SIMATIC NET HARDNET-IE S7-REDCONNECT Upgrade Software upgrade for S7-REDCONNECT Runtime software, 2 languages (English, German), software class A, runs with Windows 7 Ultimate 32/64-bit, Windows Server 2008 R2 Standard 64-bit or Windows Server 2012 R2 Standard 64-bit, single license for 1 installation Physical delivery Software and electronic manual on CD, license key on USB flash drive No SIMATIC PCS 7 Software Media Package	
• As of 2006 edition (V6.4)	**6GK1716-0HB00-3AE0**
• For V6.0, V6.1, V6.2, and 2005 edition (V6.3)	**6GK1716-0HB00-3AE1**
SIMATIC NET SOFTNET-IE RNA Upgrade Upgrade for SIMATIC NET SOFTNET-IE RNA as of V8.1 Runtime software, 2 languages (English, German), software class A, runs with Windows 7 Ultimate 32/64-bit, Windows Server 2008 R2 Standard 64-bit or Windows Server 2012 R2 Standard 64-bit, single license for 1 installation Physical delivery Software and electronic manual on CD, license key on USB flash drive No SIMATIC PCS 7 Software Media Package	**6GK1711-1EW00-3AE0**
SIMATIC PCS 7 BCE V8.2 Runtime license for plant bus communication via standard network adapter and Basic Communication Ethernet; already integrated with SIMATIC PCS 7 Industrial Workstations 3 languages (English, German, French), software class A, runs with Windows 7 Ultimate 32/64-bit, Windows 10 Enterprise 2015 LTSB 64-bit, Windows Server 2008 R2 Standard 64-bit or Windows Server 2012 R2 Standard 64-bit, floating license for 1 user No SIMATIC PCS 7 Software Media Package	
• Physical delivery License key on USB flash drive, certificate of license	**6ES7650-1CD28-2YB5**
• Online delivery License key download, online certificate of license Note: Email address required!	**6ES7650-1CD28-2YH5**

	Article No.
Communication products for SIMATIC PCS 7 V8.1	
SIMATIC NET HARDNET-IE S7 V12 S7 communication software with license for up to 4 Industrial Ethernet CPs, e.g. CP 1613 A2, CP 1623, CP 1628 Runtime software, 2 languages (English, German), software class A, runs with Windows 7 Ultimate 32/64-bit or Windows Server 2008 R2 Standard 64-bit, single license for 1 installation Physical delivery Software and electronic manual on CD, license key on USB flash drive No SIMATIC PCS 7 Software Media Package	**6GK1716-1CB12-0AA0**
SIMATIC NET HARDNET-IE S7-REDCONNECT V12 S7 communication software for fail-safe S7 communication over redundant networks with license for up to 4 Industrial Ethernet CPs, e.g. CP 1613 A2, CP 1623, CP 1628 Runtime software, 2 languages (English, German), software class A, runs with Windows 7 Ultimate 32/64-bit or Windows Server 2008 R2 Standard 64-bit, single license for 1 installation Physical delivery Software and electronic manual on CD, license key on USB flash drive No SIMATIC PCS 7 Software Media Package	**6GK1716-0HB12-0AA0**
SIMATIC NET HARDNET-IE S7-REDCONNECT PowerPack V12 For expansion of HARDNET-IE S7 communication software to HARDNET-IE S7-REDCONNECT, with license for up to 4 Industrial Ethernet CPs, e.g. CP 1613 A2, CP 1623, CP 1628 Runtime software, 2 languages (English, German), software class A, runs with Windows 7 Ultimate 32/64-bit or Windows Server 2008 R2 Standard 64-bit, single license for 1 installation Physical delivery Software and electronic manual on CD, license key on USB flash drive No SIMATIC PCS 7 Software Media Package	**6GK1716-0HB12-0AC0**

Ordering data	Article No.
SIMATIC NET SOFTNET-IE RNA V12 Software for linking of PCS 7 stations to PRP-enabled networks with integrated SNMP Runtime software, 2 languages (English, German), software class A, runs with Windows 7 Ultimate 32/64-bit or Windows Server 2008 R2 Standard 64-bit, single license for 1 installation Physical delivery Software and electronic manual on CD, license key on USB flash drive No SIMATIC PCS 7 Software Media Package	**6GK1711-1EW12-0AA0**
Upgrades for communication software	
SIMATIC NET HARDNET-IE S7-REDCONNECT Upgrade Software upgrade for S7-REDCONNECT Runtime software, 2 languages (English, German), software class A, runs with Windows 7 Ultimate 32/64-bit or Windows Server 2008 R2 Standard 64-bit, single license for 1 installation Physical delivery Software and electronic manual on CD, license key on USB flash drive No SIMATIC PCS 7 Software Media Package	
• As of 2006 edition (V6.4)	**6GK1716-0HB00-3AE0**
• For V6.0, V6.1, V6.2, and 2005 edition (V6.3)	**6GK1716-0HB00-3AE1**
SIMATIC NET SOFTNET-IE RNA Upgrade Upgrade for SIMATIC NET SOFTNET-IE RNA as of V8.1 Runtime software, 2 languages (English, German), software class A, runs with Windows 7 Ultimate 32/64-bit or Windows Server 2008 R2 Standard 64-bit, single license for 1 installation Physical delivery Software and electronic manual on CD, license key on USB flash drive No SIMATIC PCS 7 Software Media Package	**6GK1711-1EW00-3AE0**

	Article No.
BCE license	
SIMATIC PCS 7 BCE V8.1 Runtime license for plant bus communication via standard network adapter and Basic Communication Ethernet; already integrated with SIMATIC PCS 7 Industrial Workstations 3 languages (English, German, French), software class A, runs with Windows 7 Ultimate 32/64-bit or Windows Server 2008 R2 Standard 64-bit, floating license for 1 user No SIMATIC PCS 7 Software Media Package	
• Physical delivery License key on USB flash drive, certificate of license	**6ES7650-1CD18-2YB5**
• Online delivery License key download, online certificate of license Note: E-mail address required!	**6ES7650-1CD18-2YH5**

Ordering data

	Article No.
Communication products for SIMATIC PCS 7 V8.0	
SIMATIC NET HARDNET-IE S7 V8.1 S7 communication software for CP 1613 A2/CP 1623/CP 1628, runtime software 2 languages (English, German), software class A, runs with Windows 7 Ultimate 32/64-bit or Windows Server 2008 R2 Standard 64-bit, single license for 1 installation Physical delivery Software and electronic manual on CD, license key on USB flash drive No SIMATIC PCS 7 Software Media Package	**6GK1716-1CB08-1AA0**
SIMATIC NET HARDNET-IE S7-REDCONNECT V8.1 Software for fail-safe S7 communication via redundant networks, for CP 1613 A2/CP 1623/CP 1628, runtime software 2 languages (English, German), software class A, runs with Windows 7 Ultimate 32/64-bit or Windows Server 2008 R2 Standard 64-bit, single license for 1 installation Physical delivery Software and electronic manual on CD, license key on USB flash drive No SIMATIC PCS 7 Software Media Package	**6GK1716-0HB08-1AA0**
SIMATIC NET HARDNET-IE S7-REDCONNECT PowerPack V8.1 For expansion of HARDNET-IE S7 communication software to HARDNET-IE S7-REDCONNECT, runtime software 2 languages (English, German), software class A, runs with Windows 7 Ultimate 32/64-bit or Windows Server 2008 R2 Standard 64-bit, single license for 1 installation Physical delivery Software and electronic manual on CD, license key on USB flash drive No SIMATIC PCS 7 Software Media Package	**6GK1716-0HB08-1AC0**

	Article No.
Upgrade of S7-REDCONNECT communication software	
SIMATIC NET HARDNET-IE S7-REDCONNECT Upgrade Software upgrade for S7-REDCONNECT, runtime software 2 languages (English, German), single license for 1 installation Physical delivery Software and electronic manual on CD, license key on USB flash drive No SIMATIC PCS 7 Software Media Package	
• As of 2006 edition (V6.4)	**6GK1716-0HB00-3AE0**
• For V6.0, V6.1, V6.2, and 2005 edition (V6.3)	**6GK1716-0HB00-3AE1**
BCE license	
PCS 7 BCE V8.0 Runtime license for plant bus communication via standard network adapter and Basic Communication Ethernet; already integrated with SIMATIC PCS 7 Industrial Workstations 3 languages (English, German, French), software class A, runs with Windows XP Professional 32-bit, Windows 7 Ultimate 32/64-bit, Windows Server 2003 R2 Standard 32-bit or Windows Server 2008 R2 Standard 64-bit, floating license for 1 user No SIMATIC PCS 7 Software Media Package	
• Physical delivery License key on USB flash drive, certificate of license	**6ES7650-1CD08-2YB5**
• Online delivery License key download, online certificate of license Note: E-mail address required!	**6ES7650-1CD08-2YH5**

Ordering data	Article No.
Communication products for SIMATIC PCS 7 V7.1	
SIMATIC NET S7-1613/2008 (V7.1) for Industrial Ethernet S7 communication software for CP 1613 A2/CP 1623, runtime software 2 languages (English, German), software class A, runs with Windows XP Professional or Windows Server 2003; single license for 1 installation Physical delivery Software and electronic manual on CD, license key on USB flash drive No SIMATIC PCS 7 Software Media Package	**6GK1716-1CB71-3AA0**
SIMATIC NET S7-REDCONNECT/2008 (V7.1) Software for fail-safe S7 communication via redundant networks, for CP 1613 A2/CP 1623, runtime software 2 languages (English, German), software class A, runs with Windows XP Professional or Windows Server 2003, single license for 1 installation Physical delivery Software and electronic manual on CD, license key on USB flash drive No SIMATIC PCS 7 Software Media Package	**6GK1716-0HB71-3AA0**
SIMATIC NET PowerPack S7-REDCONNECT/2008 (V7.1) Software for expansion of S7-1613 to S7-REDCONNECT, runtime software 2 languages (English, German), software class A, runs with Windows XP Professional or Windows Server 2003, single license for 1 installation Physical delivery Software and electronic manual on CD, license key on USB flash drive No SIMATIC PCS 7 Software Media Package	**6GK1716-0HB71-3AC0**

	Article No.
Upgrade of S7-REDCONNECT communication software	
SIMATIC NET HARDNET-IE S7-REDCONNECT Upgrade Software upgrade for S7-REDCONNECT, runtime software 2 languages (English, German), single license for 1 installation Physical delivery Software and electronic manual on CD, license key on USB flash drive No SIMATIC PCS 7 Software Media Package	
• As of 2006 edition (V6.4)	**6GK1716-0HB00-3AE0**
• For V6.0, V6.1, V6.2, and 2005 edition (V6.3)	**6GK1716-0HB00-3AE1**
BCE license	
PCS 7 BCE V7.1 (for SIMATIC PCS 7 V7.1) Runtime license for plant bus communication via standard network adapter and Basic Communication Ethernet; already integrated with SIMATIC PCS 7 Industrial Workstations 3 languages (English, German, French), software class A, runs with Windows XP Professional or Windows Server 2003; floating license for 1 user Physical delivery License key on USB flash drive, certificate of license No SIMATIC PCS 7 Software Media Package	**6ES7650-1CD17-2YB5**

Overview

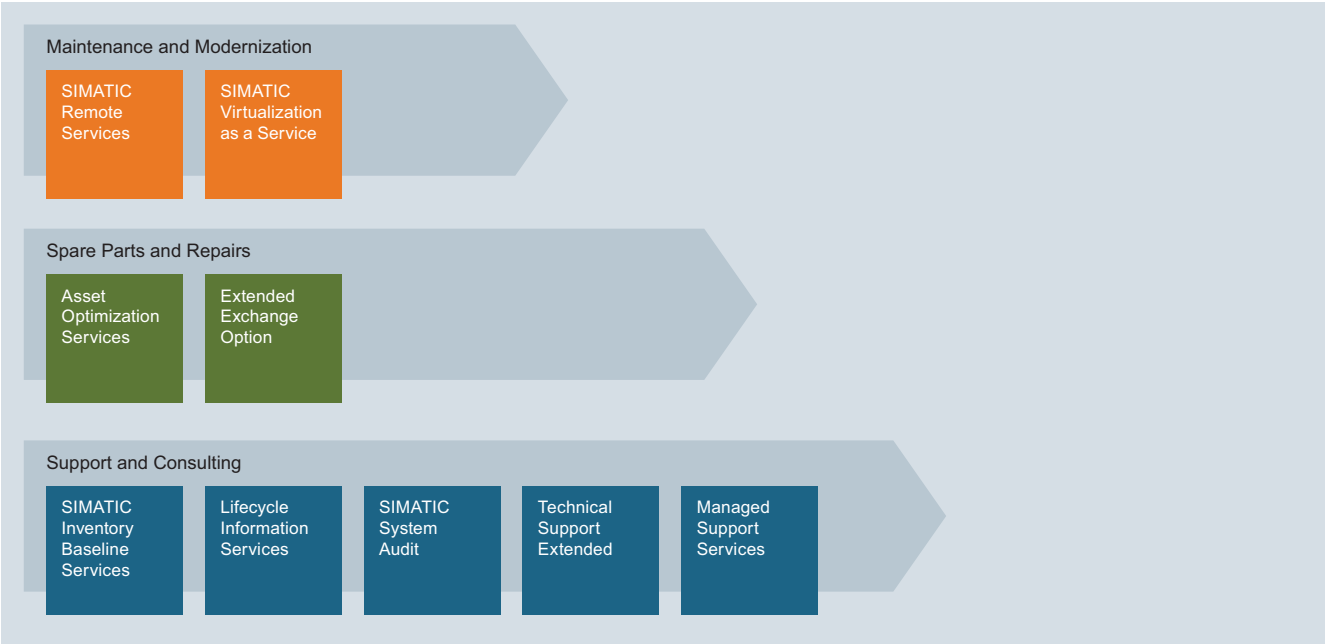

SIMATIC Lifecycle Services – Explicit portfolio elements

The service capability of your process control system is the key success criterion when it comes to making operating costs predictable and optimizing them continuously, to protect investments and thus ensure plant availability.

Reactive, proactive and preventive lifecycle services therefore ensure the service capability of the process control system in modern plants at optimized costs throughout the entire lifecycle.

The high pressure for innovation, especially through the use of IT systems that are constantly being upgraded, requires regular modernizations - even in automation. Only process control systems that can be updated/upgraded throughout their entire lifecycle can keep pace with the ongoing development of system technology at reasonable costs.

The requirements and specifications for operation of a plant are very specific, especially with a service life of 15 years and more. The service requirements are just as diverse. The SIMATIC PCS 7 Lifecycle Services provide an efficient service program for everything to do with the SIMATIC PCS 7 control system. These services can be easily integrated into individual service contracts that are customized to meet your specific requirements.

The standardized yet still flexible structure of the SIMATIC PCS 7 Lifecycle Services offers a future-proof basis for:

- Protection of your investments
- Securing plant availability
- Ability to calculate long-term maintenance costs
- Cost-optimized modernizations

Application

SIMATIC PCS 7 service programs

Our service programs comprise selected packages of services for a product family or a service topic. The individual portfolio elements are coordinated to ensure seamless coverage throughout the entire life cycle and support optimum use of your products and systems. The individual services of a service program can be also be used separately.

Based on the portfolio elements of the SIMATIC Lifecycle Services, the following service programs are offered for SIMATIC PCS 7.

Installed Base Capture & Analytics Services

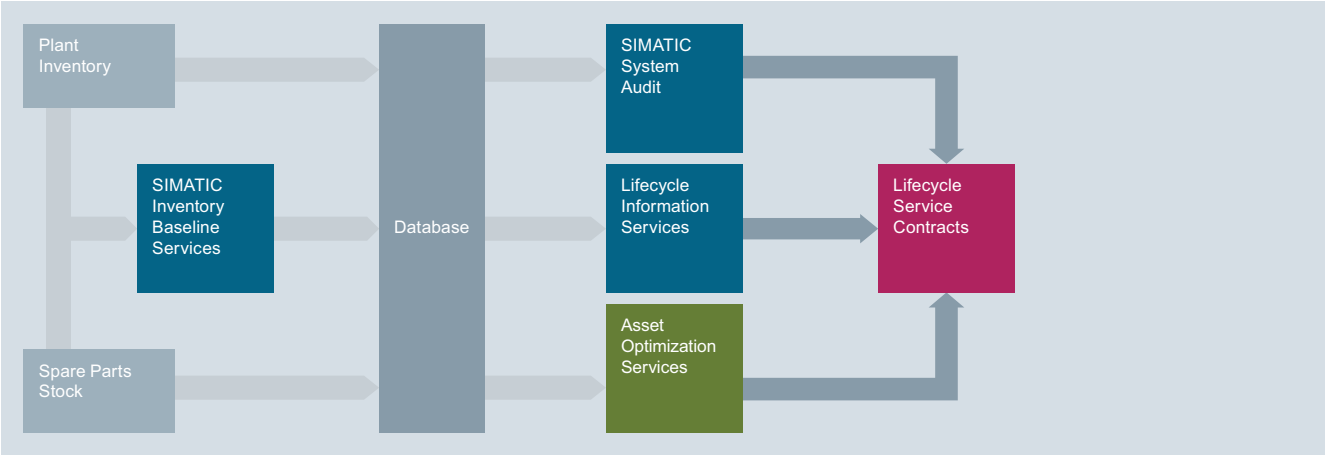

"Installed Base Capture & Analytics Services" are used to analyze and optimize the installed base. Ideally they include the following service elements:

- SIMATIC Inventory Baseline Services
- SIMATIC System Audit
- Lifecycle Service Information
- Asset Optimization Services

Services for Virtualized Operator & Engineering Systems

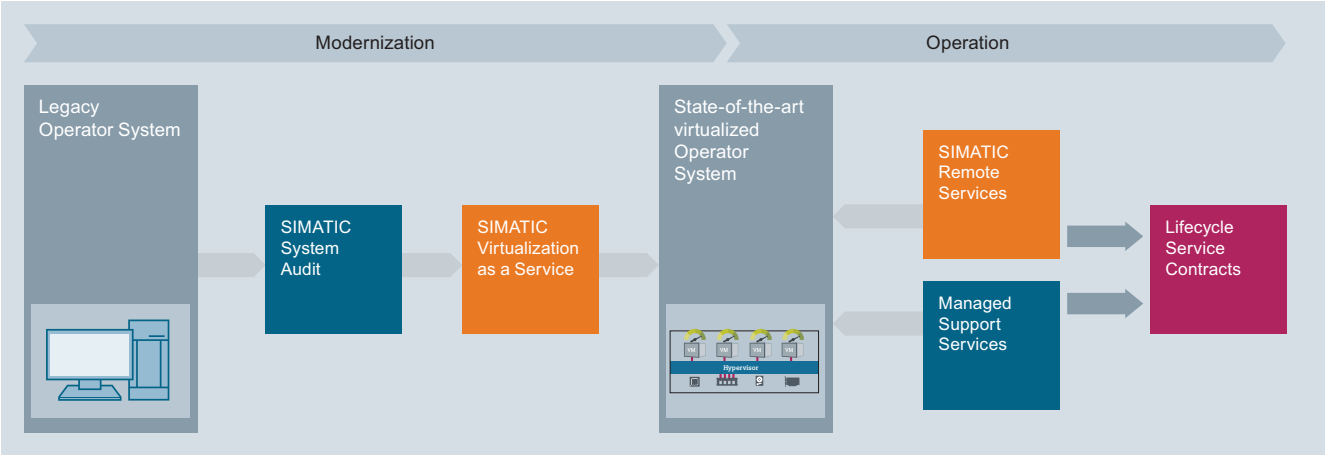

The "Services for Virtualized Operator & Engineering Systems" service program includes the portfolio elements recommended for a virtual control system. It is based on a central element, the "SIMATIC Virtualization as a Service", and the optional upstream service "SIMATIC System Audit".

Application (continued)

Professional System Support

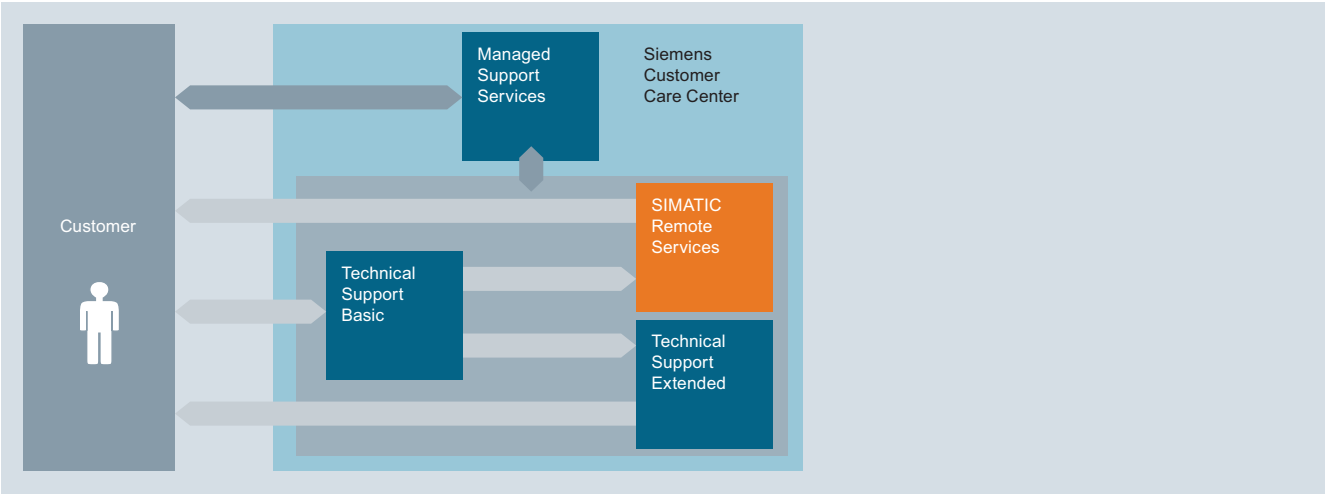

The "Professional System Support" service program combines the following portfolio elements:

- Managed Support Services
- Technical Support Basic
- Technical Support Extended
- SIMATIC Remote Services

More information

More information is available on the Internet at:

www.siemens.de/PCS7LCS

www.siemens.com/pils

Overview

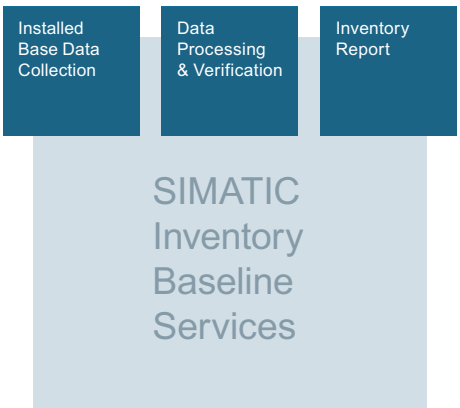

The correct decisions have to be made when planning modernization measures or when budgeting necessary maintenance measures. The basis for such decisions is an in-depth knowledge of the installed system base. The requirements in this context are:

- Uniform and complete inclusion of all installed automation components
- Implement inclusion in a relatively short time and at low costs
- Make the result available through standardized reports

With SIMATIC Inventory Baseline Services, Siemens is offering data-driven services employing new methods and tools for even more efficient maintenance of your machines and plants.

Performing an inventory provides an overview of the currently installed plant equipment and the spare parts inventory. The result of the inventory is used as a decision-making tool when planning future measures for maintenance and modernization.

SIMATIC Inventory Baseline Services offer transparency with regard to the installed automation components of machines and plants and provide the data for additional lifecycle services, such as, SIMATIC System Audit, Lifecycle Information Services or Asset Optimization Services.

Benefits

- Cost-efficient and standardized inventory of all of the installed automation components
- Valid decision aid for planned plant expansions, modernizations as well as preparation for updates/upgrades
- Solid basis for planning and implementation of additional lifecycle services

Ordering data

Ordering data	Article No.
Complete order processing	**9LA1110-8AJ00-1AA0**
Partial processing evaluation of SDT data	**9LA1110-8AJ00-2AA0**
Expanded data volume for large plants	**9LA1110-8AJ00-4AA0**

More information

More information is available online at:

www.siemens.com/sibs

Lifecycle Information Services

Overview

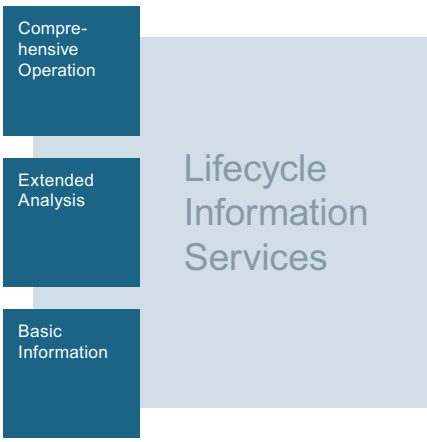

To plan your maintenance strategy, Lifecycle Information Services provide you regularly with detailed information on the product lifecycle of the utilized components.

The Lifecycle Information Services have a modular structure so that you need only request information that you actually require. Each of the following three methods returns a plant-specific report as result. You can decide for yourself how comprehensive you want this report to be.

- **Basic Information**
  Product Lifecycle Status focusing on analysis of functional obsolescence
- **Extended Analysis**
  "Basic Information" module and analysis of product-related statistical mean time between failures (MTBF)
- **Comprehensive Operation**
  "Extended" module supplemented with plant-specific information on updates/upgrades and general recommendations

Benefits

- Proactive, regular service information on the reduction of obsolescence risks
- Securing plant availability by means of specific service recommendations
- Prevention of unscheduled downtimes or cost-intensive supply bottlenecks
- Evaluation of new technological innovations

Ordering data

	Article No.
Basic Information	
• Up to 50 article numbers	
- One-time service	**9LA1110-8AG10-1AA0**
- Cyclically 1 × per year	**9LA1110-8AG10-1AB0**
- Cyclically 2 × per year	**9LA1110-8AG10-1AC0**
- Cyclically 4 × per year	**9LA1110-8AG10-1AD0**
• 50 to 150 article numbers	
- One-time service	**9LA1110-8AG10-1BA0**
- Cyclically 1 × per year	**9LA1110-8AG10-1BB0**
- Cyclically 2 × per year	**9LA1110-8AG10-1BC0**
- Cyclically 4 × per year	**9LA1110-8AG10-1BD0**
• 150 to 300 article numbers	
- One-time service	**9LA1110-8AG10-1CA0**
- Cyclically 1 × per year	**9LA1110-8AG10-1CB0**
- Cyclically 2 × per year	**9LA1110-8AG10-1CC0**
- Cyclically 4 × per year	**9LA1110-8AG10-1CD0**
Extended Analysis	
• Up to 50 article numbers	
- One-time service	**9LA1110-8AG10-2AA0**
- Cyclically 1 × per year	**9LA1110-8AG10-2AB0**
- Cyclically 2 × per year	**9LA1110-8AG10-2AC0**
- Cyclically 4 × per year	**9LA1110-8AG10-2AD0**
• 50 to 150 article numbers	
- One-time service	**9LA1110-8AG10-2BA0**
- Cyclically 1 × per year	**9LA1110-8AG10-2BB0**
- Cyclically 2 × per year	**9LA1110-8AG10-2BC0**
- Cyclically 4 × per year	**9LA1110-8AG10-2BD0**
• 150 to 300 article numbers	
- One-time service	**9LA1110-8AG10-2CA0**
- Cyclically 1 × per year	**9LA1110-8AG10-2CB0**
- Cyclically 2 × per year	**9LA1110-8AG10-2CC0**
- Cyclically 4 × per year	**9LA1110-8AG10-2CD0**
Comprehensive Operation	
• Up to 50 article numbers	
- One-time service	**9LA1110-8AG10-3AA0**
- Cyclically 1 × per year	**9LA1110-8AG10-3AB0**
- Cyclically 2 × per year	**9LA1110-8AG10-3AC0**
- Cyclically 4 × per year	**9LA1110-8AG10-3AD0**
• 50 to 150 article numbers	
- One-time service	**9LA1110-8AG10-3BA0**
- Cyclically 1 × per year	**9LA1110-8AG10-3BB0**
- Cyclically 2 × per year	**9LA1110-8AG10-3BC0**
- Cyclically 4 × per year	**9LA1110-8AG10-3BD0**
• 150 to 300 article numbers	
- One-time service	**9LA1110-8AG10-3CA0**
- Cyclically 1 × per year	**9LA1110-8AG10-3CB0**
- Cyclically 2 × per year	**9LA1110-8AG10-3CC0**
- Cyclically 4 × per year	**9LA1110-8AG10-3CD0**

More information

More information is available online at:

www.siemens.com/lis

Overview

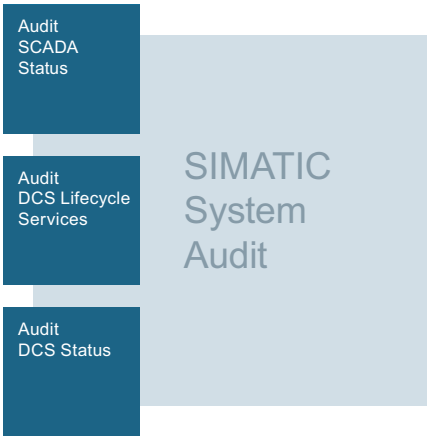

SIMATIC System Audit is used to analyze and evaluate the system status of SIMATIC PCS 7 systems or SIMATIC WinCC-based SCADA systems with lower SIMATIC S7 levels with regard to service capability, upgrade capability or lifecycle service contract compliance.

The modular structure allows for selective evaluation of the system status (assessment) as well as a detailed, comprehensive system analysis with fundamental statements on the current plant status and recommendations for restoration of the service and upgrade capability (audit).

Benefits

SIMATIC System Audit not only provides you with a comprehensive overview of the status of your automation system and the utilized components, it also offers a number of additional benefits:

- Competent analysis of weak points and risks with recommendations
- Avoidance or minimization of system risks for service and upgrade capability
- Reduction of standstill and downtimes by ensuring service capability
- Valid basis for the preparation of long-term lifecycle service contracts

SIMATIC System Audit is available for physical as well as virtual system configurations.

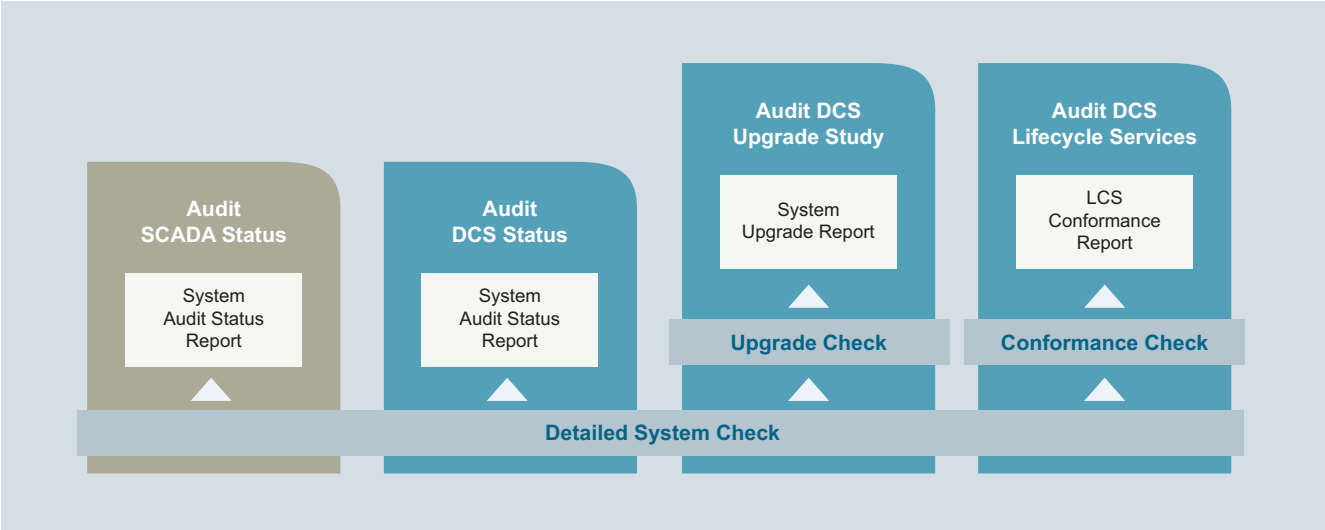

Ordering data

	Article No.
SIMATIC System - Assessment DCS	**9LA1110-8AC10-0AA1**
SIMATIC System Audit - DCS Status	**9LA1110-8AC10-4AA1**
SIMATIC System DCS - Upgrade Study	**9LA1110-8AC10-4AA2**
SIMATIC System Audit - DCS Lifecycle Services	**9LA1110-8AC10-4AA3**
SIMATIC System Audit DCS - Special Configurations	**9LA1110-8AC10-3AA1**
SIMATIC System - Assessment SCADA	**9LA1110-8AD10-0AA1**
SIMATIC System Audit - SCADA Status	**9LA1110-8AD10-1AA1**

More information

More information is available online at:

www.siemens.com/ssaa

Overview

High plant availability with optimal spare part supply - Asset Optimization Services provide a structured and systematic procedure for the holistic optimization of the supply of spare parts.

The four phases of Asset Optimization Services are coordinated with each other but can also be used independently:

- Phase I: **Analysis**
  Determine the current spare part situation on site: Availability, product lifecycle, spare part delivery times
- Phase II: **Concept**
  The concept phase consists of an analysis of the actual requirements and the development of a spare part concept.
- Phase III: **Implementation**
  Based on the results of the concept phase, necessary inventory structures and inventory locations are established and spare parts procured.
- Phase IV: **Operation**
  The optimized and continuous supply of spare parts is an essential contribution to high plant availability. Depending on the specific contractual agreements, cyclic inventory analysis and a regular exchange of information also take place.

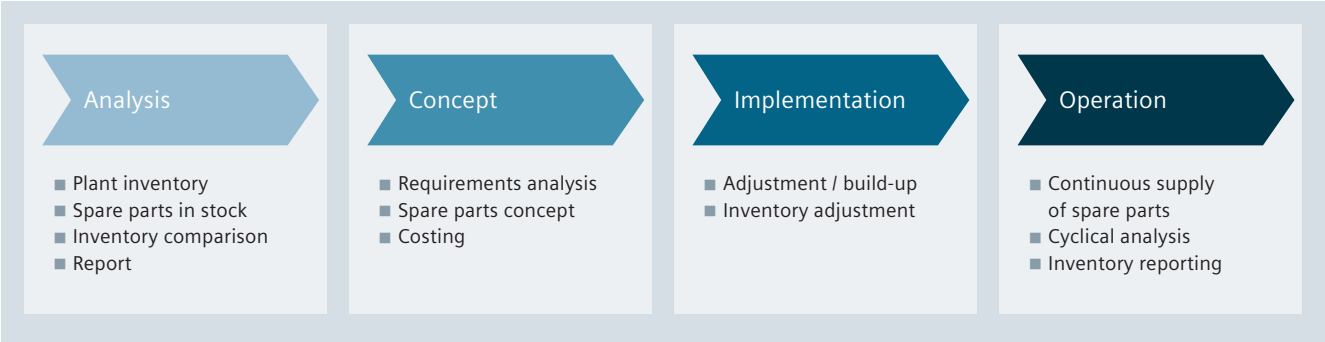

Benefits

- Creates transparency about the actual spare part requirements
- Ensures spare part availability across the entire lifecycle of the machine or plant and therefore fulfills an important prerequisite for improved service capability
- Shift to external inventory keeping and continuous supply with necessary spare parts

Ordering data

Ordering data	Article No.
Analysis up to 100 article numbers	**9LA1110-8AE10-1AA0**
Concept up to max. 3 days	**9LA1110-8AE10-2AA0**
Implementation	**9LA1110-8AE10-3AA0**
Operation - Spare Parts Supply	**9LA1110-8AE10-4AA0**
Operation - Spare Part Management	**9LA1110-8AE10-4BA0**
Additional options	
Product Extension Including 500 additional article numbers in the analysis phase	**9LA1110-8AE10-8AA0**
Time Extension 1 additional day for analysis and concept phase	**9LA1110-8AE10-8BA0**

More information

More information is available online at:

www.siemens.com/aos

Overview

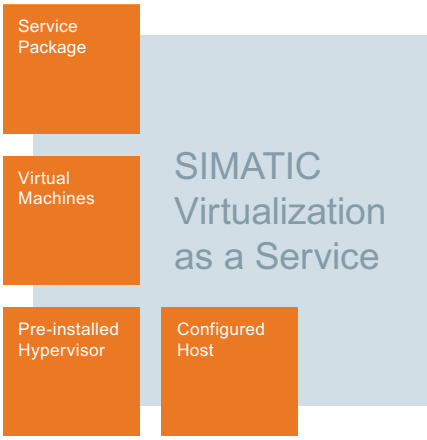

In addition to maintenance of the hardware platform, service and maintenance of the installed software components is decisive for the lifecycle costs of a PC-based control system. Together with IT technologies, innovative concepts, such as visualization, have been introduced to the industrial environment.

A virtual system needs less hardware, space and energy. It can also be serviced and maintained from a central location. The advantages are clear: greater flexibility at lower costs.

With SIMATIC Virtualization as a Service, you receive the life-cycle service for the virtual system including the matching hardware and software components directly from a single source and perfectly coordinated with each other.

SIMATIC Virtualization as a Service includes:

- Setup of a complete virtualization host
- Configuration of the virtual machines
- Installation and configuration of the operating systems
- Installation of the SIMATIC software
- Comprehensive service package

You have the option to supplement this offer with Managed Support Services and SIMATIC Remote Services. See also page 17/3).

Benefits

- Comprehensive lifecycle services for the virtual system including hardware and software – all from a single source
- Preconfigured, ready-to-use operator and engineering stations
- Optimal use of existing hardware resources
- Simple and cost-effective system expansions and updates

Ordering data

We offer the following:

- Basic system (host hardware and installed Hypervisor software)
- Thin Client for system management
- Service Package
- Range of different virtual machines (virtual machines can only be ordered in combination with a host)

You also have the option of ordering additional hardware and software components such as VM vCenter server, the SIMATIC Batch SSD kit, additional thin clients as well as supplementary lifecycle services.

Ordering data

	Article No.
Basic system	
8Cx1P Host System HP ProLiant DL380 GEN9 with VMware Hypervisor + HP management console	**9LA1110-6SV00-1HB1**
6Cx2P Host System HP ProLiant DL380 GEN9 with VMware Hypervisor + HP management console	**9LA1110-6SV00-1HC1**
8Cx2P Host System HP ProLiant DL380 GEN9 with VMware Hypervisor + HP management console	**9LA1110-6SV00-1HE1**
10Cx2P Host System HP ProLiant DL380 GEN9 with VMware Hypervisor + HP management console	**9LA1110-6SV00-1HF1**
Thin Clients	
HP T620 ThinClient Quad Screen Windows 7 Embedded operating system	**9LA1110-6SV00-1TB0**
HP T620 ThinClient Dual Screen Windows 7 Embedded operating system	**9LA1110-6SV00-1TA2**
HP T620 ThinClient Dual Screen Linux Thin Pro operating system	**9LA1110-6SV00-1TA3**
HP T620 ThinClient Quad Screen Linux Thin Pro operating system	**9LA1110-6SV00-1TB1**
Service contracts	
2 year service contract	
• for 8Cx1P Host	**9LA1110-6SV00-1AB1**
• for 6Cx2P Host	**9LA1110-6SV00-1AC1**
• for 8Cx2P Host	**9LA1110-6SV00-1AE1**
• for 10Cx2P Host	**9LA1110-6SV00-1AF1**
5 year service contract	
• for 8Cx1P Host	**9LA1110-6SV00-1AB3**
• for 6Cx2P Host	**9LA1110-6SV00-1AC3**
• for 8Cx2P Host	**9LA1110-6SV00-1AE3**
• for 10Cx2P Host	**9LA1110-6SV00-1AF3**
1 year service contract extension	
• for 6Cx1P HP Host	**9LA1110-6SV00-1EA0**
• for 8Cx1P HP Host	**9LA1110-6SV00-1EB0**
• for 6Cx2P HP Host	**9LA1110-6SV00-1EC0**
• for 8Cx2P HP Host	**9LA1110-6SV00-1EE0**

	Article No.
Virtual machines	
VM with PCS 7 V8.1 SP1 OS Server Windows 2008 Server R2 64-bit operating system	**9LA1110-6SV05-1AB1**
VM with PCS 7 V8.1 SP1 ES/OS Client Windows 2008 Server R2 64-bit operating system	**9LA1110-6SV05-1GB1**
VM with PCS 7 V8.1 SP1 OS Client Windows 2008 Server R2 64-bit operating system	**9LA1110-6SV05-1HB1**
VM with PCS 7 V8.1 SP1 Web Server Windows 2008 Server R2 64-bit operating system	**9LA1110-6SV05-1DB1**
VM with PCS 7 V8.1 SP1 BATCH server Windows 2008 Server R2 64-bit operating system	**9LA1110-6SV05-1LB1**
VM with PCS 7 V8.1 SP1 OS client / BATCH client Windows 2008 Server R2 64-bit operating system	**9LA1110-6SV05-1JB1**
VM with PCS 7 V8.1 SP1 Process Historian / Information Server Windows 2008 Server R2 64-bit operating system	**9LA1110-6SV05-1KB1**
VM with WinCC V7.3 SE server Windows 2008 Server R2 64-bit operating system	**9LA1110-6SV05-2AB1**
VM with WinCC V7.3 SE client Windows 2008 Server R2 64-bit operating system	**9LA1110-6SV05-2BB1**
VM with Windows 2008 Server R2 64-bit	**9LA1110-6SV05-0AA1**
Optional components and associated service contracts	
VMware vCenter Server Foundation Appliance with license	**9LA1110-6SV05-0VF0**
VMware vCenter Server Standard Appliance with license	**9LA1110-6SV05-0VS0**
2 year SIVaaS service contract	
• for vCenter Server Foundation	**9LA1110-6SV00-1VF0**
• for vCenter Server Standard	**9LA1110-6SV00-1VS0**
Virtual Infrastructure Extension Service (VM extension option)	**9LA1110-6SV06-0AA0**
SIMATIC SSD Batch kit for SIMATIC PCS 7 BATCH server	**9LA1110-6SV00-1BA0**

More information

More information is available online at:

www.siemens.com/sivaas

Overview

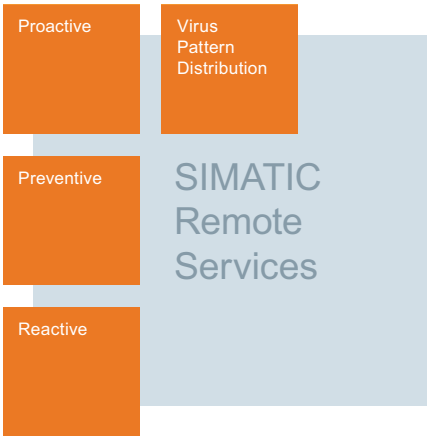

SIMATIC Remote Services

SIMATIC Remote Services can be combined and adapted as necessary from different packages and service modules. The following service modules are available:

- The **Reactive module** is a low-cost means of getting started with the latest, efficient support service. Service availability based on the SRS platform and remote access tools forms the basis for rapid fault rectification or a comprehensive consultation regarding your machine or plant.
- Inspection services are provided "remotely" with the **Preventive module**. The services include preventive checking of the system status for transparent display of the plant situation and recommendation for preventive measures. The results are made available in form of a system status report.
- The **Proactive module** offers continuous real-time monitoring of the utilized SIMATIC automation system. The monitoring of critical system status information in real-time is combined in this module with a proactive response to arising events by qualified system specialists.
- The **Virus Pattern Distribution module** extends the SIMATIC Remote Services portfolio to include an additional proactive component which promptly supplies the system with the latest and system-tested virus signatures.

The "Remote Access Services" (so-called “Connectivity packages”) are required once per installation and enable communication between the customer system and Siemens IT infrastructure (cRSP = common Remote Service platform); they consist of different hardware and software components. You can obtain detailed information from the Siemens representative in your region.

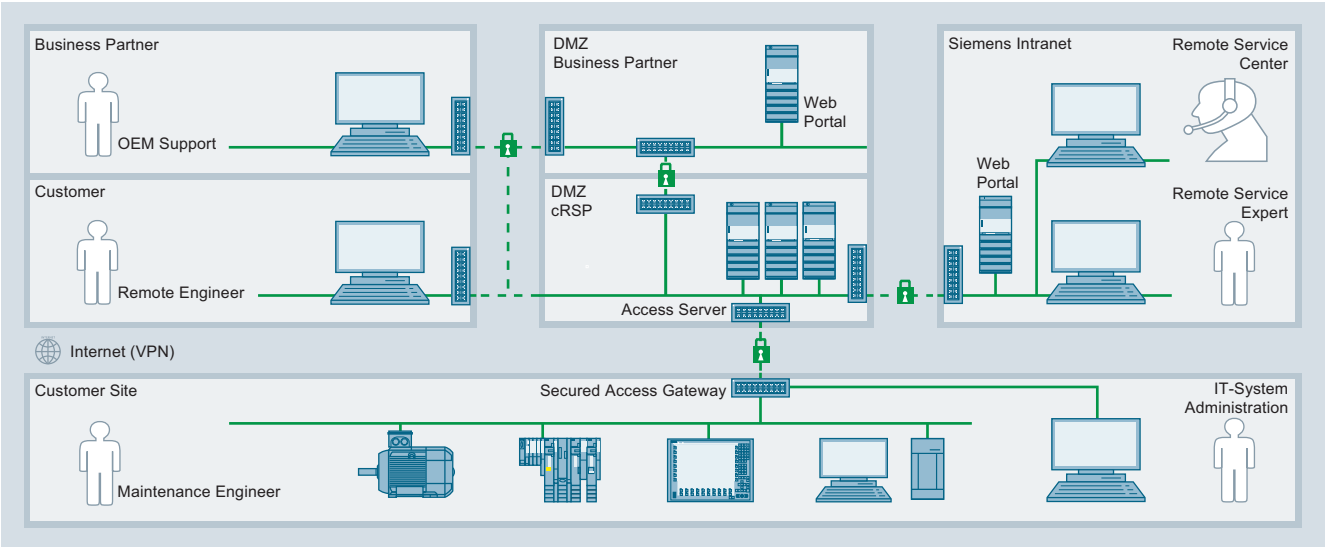

Siemens Remote Service platform

Benefits

- Secure remote connection of your automation system to the SIMATIC TechSupport IT infrastructure
- Global, direct connection to the network of the Siemens system experts
- Provision of the remote infrastructure including support and maintenance
- Complete transparency due to central administration of all system accesses
- Compatible with generally valid Industrial Security concepts
- TÜV/CERT certification of the Siemens cRSP infrastructure

Ordering data

Ordering data	Article No.
Modules	
Reactive Reactive services over cRSP, with max. 5 solved service requests	**9LA1110-1AA00**
Preventive	
• Up to 5 devices, cyclically 4 × per year	**9LA1110-1CA00**
• Up to 20 devices, cyclically 4 × per year	**9LA1110-1CB00**
• Up to 50 devices, cyclically 4 × per year	**9LA1110-1CC00**
• Up to 75 devices, cyclically 4 × per year	**9LA1110-1CE00**
• Up to 100 devices, cyclically 4 × per year	**9LA1110-1CF00**
Preventive Module – Light Single system status report for up to 10 devices	**9LA1110-1CD00**
Proactive – Setup/Update	**9LA1110-1DD00**
Proactive	
• Up to 5 devices, permanent PC-based monitoring	**9LA1110-1DA00**
• Up to 20 devices, permanent PC-based monitoring	**9LA1110-1DB00**
• Up to 50 devices, permanent PC-based monitoring	**9LA1110-1DC00**
Virus Pattern Distribution Setup/Update	**9LA1110-1ED00**
Virus Pattern Distribution 5 Up to 5 devices	**9LA1110-1EA00**
Virus Pattern Distribution 20 Up to 20 devices	**9LA1110-1EB00**
Virus Pattern Distribution 50 Up to 50 devices	**9LA1110-1EC00**

More information

More information is available online at:

www.siemens.com/siremote

Overview

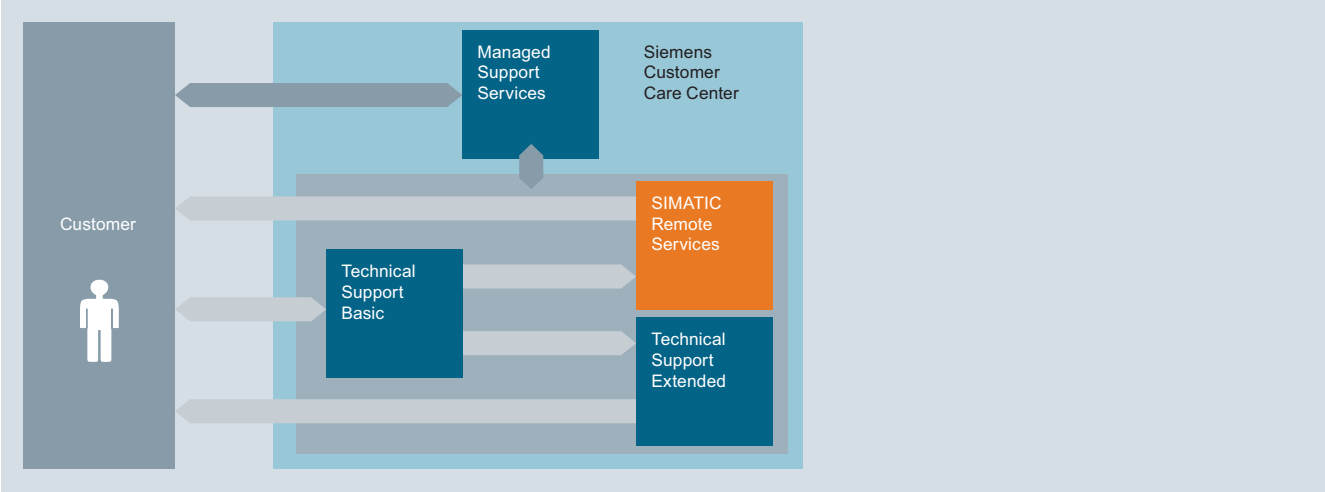

Managed Support Services offer competent and efficient support through a "Dedicated Support Manager" as central contact person who ensures an efficient exchange of information between all parties involved.

The Dedicated Support Manager coordinates and prioritizes all activities, is familiar with the customer plant, knows the maintenance processes and the installed base and, if necessary, uses remote access for diagnostic and troubleshooting purposes.

Benefits

- Quicker processing and resolution of complex support requests
- Simplification of requests by means of central coordination and an exclusive "incoming" channel
- Higher “first-time-fix-rate"
- Prevents more expensive on-site service calls
- Greater transparency of the support measures performed through active support management

Ordering data

You can choose from three different product versions for 5, 20 or 50 systems (number of utilized PLC and HMI systems). When ordering, the minimum contractual term is always at least one year.

	Article No.
Managed Support Service	
• Up to 5 systems, limited to 30 hours of support	**9LA1110-1BA00**
• Up to 20 systems, limited to 45 hours of support	**9LA1110-1BB00**
• Up to 50 systems, limited to 55 hours of support	**9LA1110-1BC00**

More information

More information is available online at:

www.siemens.com/mss

Lifecycle Service Contracts

Overview

The service elements introduced in the preceding sections form the basis for customized SIMATIC PCS 7 Lifecycle Service Contracts. Additional specific contract parameters, so-called service KPIs (e.g. terms of payment) can be agreed upon individually.

A prerequisite for entering into a Lifecycle Service Contract is an in-depth knowledge of the installed system base.

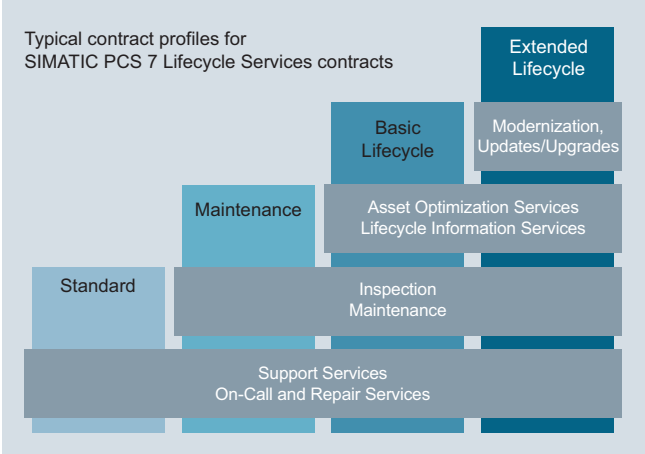

Typical variants of a Lifecycle Service contract are:

- **Standard**
  mainly contains reactive service elements, such as Technical Support, on-call or even repair services
- **Maintenance**
  includes the "Standard" profile with added services such as preventive inspection and maintenance
- **Basic Lifecycle**
  includes the "Maintenance" profile with added Lifecycle Information Services and Asset Optimization Services
- **Extended Lifecycle**
  includes the "Basic Lifecycle" profile with added comprehensive modernizations as well as updates and upgrades

Overview (continued)

Long-term investment protection with predictable costs

A **reactive service concept** increases the risk of obsolescence – operating expenses and unplanned standstills can fluctuate and are hard to predict. The investment pressure increases until an upgrade becomes necessary. Long-term maintenance planning is extremely difficult, the risks are difficult to assess and the overall costs cannot be clearly calculated.

With a **proactive service concept**, however, the management of obsolescence risks and modernizations can be planned consistently. The continuous maintenance of the plant keeps the obsolescence risk low; the optimized costs for maintenance and modernization (OPEX) are mostly consistent and therefore predictable.

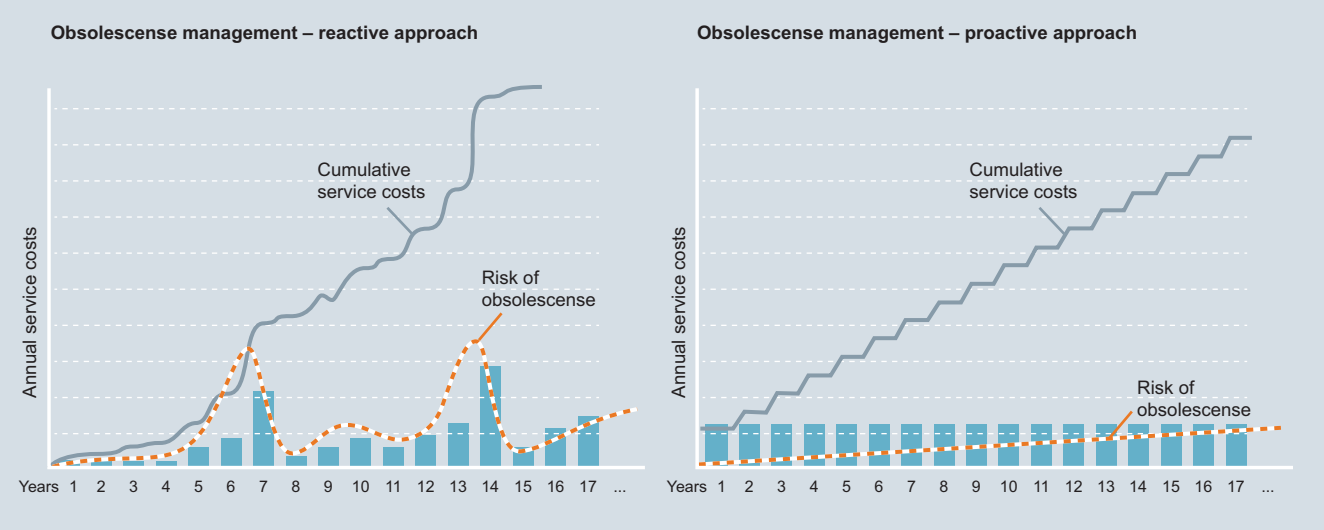

Benefits

- Long-term investment protection
- Planning capability for modernization and maintenance costs at the time of the investment across the entire lifetime of up to 15 years (TCO)
- Increased plant availability, for example, through guaranteed arrival times for service, secured spare part supply and preventive maintenance measures
- Ensure service capability through active obsolescence management for hardware and software components
- Securing system manufacturer know-how
- Professional project management from a single source for the entire duration of the contract

Overview

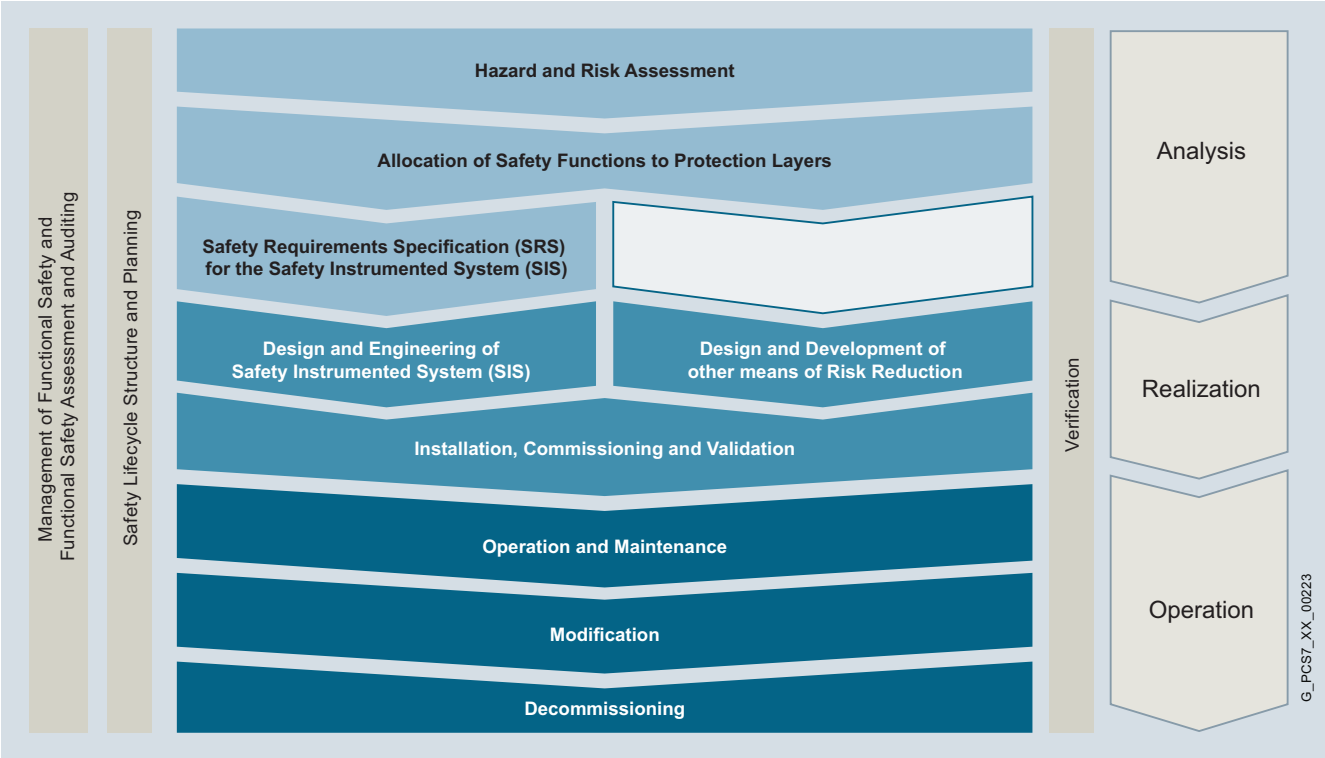

Simplified representation of the safety lifecycle (IEC 61511)

Safety Life Cycle Service for the process industry (IEC 61511)

The functional safety topic covers much more than the Installation SIL-certified hardware and software components. It requires expert knowledge, always aware of latest directives and technologies.

Plant operators, PLT protective devices for risk reduction - this includes operators of almost all chemical plants, refineries, distillation and combustion plants - must implement a system for management of functional safety. Operators are obliged to verify sufficient risk reduction.

In addition to the correct hardware and software, applied planning, operating, and change processes are decisive in ensuring that these systems effectively maintain their intended function throughout the complete lifecycle of the plant.

The basis for these processes are:

- Safety Life Cycle (SLC)
- Safety Integrity Level (SIL)

The safety lifecycle reflects the lifecycle of process plants and is divided into separate phases: Risk assessment, specification of the safety requirements, planning, installation and commissioning, operation, change as well as decommissioning. Errors in the early stages of the project can be often only be correct later at great effort and cost. We systematically prevent errors in all project phases using our standardized engineering guidelines and verification templates.

Benefits

- Standardized processes for faster and safer project implementation and commissioning
- Uniform verification and validation documents
- Reduction of development time and costs through interdisciplinary team of experts with process and automation expertise
- Acceleration of the acceptance of plants by means of customized safety concepts

Application

- Plant operators that use PLT protective equipment to reduce risks - this includes the operators of almost all chemical plants, all refineries, distillation and combustion plants.
- SIMATIC PCS 7 plants with integrated safety technology using S7 F systems and SIMATIC Safety Matrix, in which processing must be performed according to IEC 61511 or a specific safety integrity level (SIL).

Design

The following service modules are offered as a service:

- Management, evaluation of "functional safety" and audits
- Configuration and planning of the SLC (Safety Plan)
- Hazard and safety assessment
- Assignment of the safety functions to the protection levels
- Safety Requirement Specification (SRS)
- Verification and validation (e.g. SIL verification, hardware/software audit)
- Modification
- Training

More information

Siemens AG
Industry Sector

Engineering & Consulting

Team-ec.industry@siemens.com
Tel.: +49 (69) 797-84500

Additional information is available on the Internet at:
www.siemens.com/processsafety

Overview

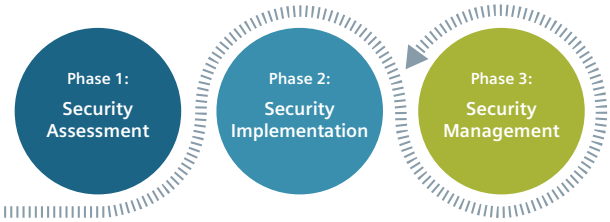

Phases of the Plant Security Services

Infected devices, unauthorized personnel, unauthorized access via networks and the internet now threaten more than just the administrative level. Even production facilities are exposed to constant danger from disruptions, integrity impairment and know-how loss.

Many weak spots in security are not obvious at first glance. That is why continuous analysis and optimization of security in existing plants is advisable. Only in this way can plant availability be kept at a consistently high level.

Siemens offers you wide-ranging support with integrated Plant Security Services for the following phases: Security Assessment, Security Implementation and Security Management.

Security Assessment

The Plant Security Services for the Security Assessment phase serve to analyze and asses the security level of the technology, network architecture and employees of an existing plant. The objective of these analyses is to identify weaknesses or deviations from standards. The result is a detailed report of the actual status of the plant with a description of weak spots and an assessment of the risks together with possible measures for improving the security level.

Security Implementation

The Plant Security Services of the Security Implementation phase aim to implement the measures defined in the Security Assessment. These measures can be classified as follows:

- **Training –** targeted training of employees:
  - Education on importance of security in industrial environments
  - Information regarding the personal contribution of employees towards an increased security level
- **Improvement of processes** – Plant-specific implementation of safety-relevant guidelines:
  - Writing and implementing safety-relevant guidelines and provisions taking plant-specific particularities into account
- **Security technologies –** Implementation of protection measures
  - Implementation of protection measures for the network and for hardware and software of the plant
  - Long-term protection through monitoring with the help of a Cyber Security Operation Center (CSOC)

Security Management

In the Security Management phase, the Plant Security Services enable proactive protection of the plant through continuous monitoring of the security status during operation. Security experts from the Siemens Cyber Security Operation Center (CSOC) are able to monitor plant systems and networks anywhere in the world and provide a warning of new weak spots and threats in real time. Continuous services deliver updates for fast safeguarding of plants against newly identified security issues.

Ordering data

Ordering data	Article No.
Security Assessments	
Security Assessment for industrial plants	9AS1411-1AA11-1AA1
Security Assessment for SIMATIC WinCC/PCS 7	9AS1411-2AA11-1AA1
Risk and weakness assessment	9AS1431-1AA11-1AB1
Security Implementation	
Consultation on security guidelines and processes	9AS1432-1AA11-1AB1
Consultation on network security	9AS1432-1AA11-1AC1
Plant perimeter firewall installation	9AS1433-1AA11-1AB3
Plant Security Monitoring (SIEM) installation	9AS1433-1AA11-1AB2
Clean slate validation	9AS1432-1AA11-1AB2
Windows local guidelines installation	9AS1432-1AA11-1AB5
Windows group guidelines (AD) installation	9AS1432-1AA11-1AB4
Windows patch installation	9AS1432-1AA11-1AB6
Virus protection installation	9AS1432-1AA11-1AB7
Whitelisting installation	9AS1432-1AA11-1AB8
Virus protection and whitelisting management server installation (ePO)	9AS1433-1AA11-1AB1
Disaster recovery support: System backup	9AS1432-1AA11-1AB3
Security Management	
Operator security awareness training	9AS1432-1AA11-1AB0
Plant perimeter firewall management	9AS1433-1AA11-1AC2
Quarterly firewall rule validation	9AS1433-1AA11-1AC1
Managed Plant Security Monitoring (SIEM)	9AS1433-1AA11-1AB7
Patch & weakness management support	9AS1433-1AA11-1AB5
Virus protection management	9AS1433-1AA11-1AB6
Whitelisting management	9AS1433-1AA11-1AB8
Remote incident handling	9AS1433-1AA11-1AC3

More information

You will find more information on Plant Security Services on the Internet:
www.siemens.com/plant-security-services

If you have any further questions, please contact:

Email: industrialsecurity.i@siemens.com

Appendix

Your benefit from practical training directly from the manufacturer

SITRAIN – Training for Industry – provides you with comprehensive support in solving your tasks.

Training directly from the manufacturer enables you to make correct decisions with confidence.

Increased profits and lower costs:

- Shorter times for commissioning, maintenance and servicing
- Optimized production operations
- Reliable configuration and startup
- Shorten commissioning times, reduce downtimes, and faster troubleshooting
- Exclude expensive faulty planning right from the start.
- Flexible plant adaptation to market requirements
- Compliance with quality standards in production
- Increased employee satisfaction and motivation
- Shorter familiarization times following changes in technology and staff

Contact

Visit our site on the Internet at:
www.siemens.com/sitrain

or let us advise you personally. You can request our latest training catalog from:

SITRAIN – Training for Industry
SITRAIN Customer Support Germany:

Tel.: +49 911 895-7575
Fax: +49 911 895-7576

Email: info@sitrain.com

Your benefits with SITRAIN – Training for Industry

Certified top trainers

Our trainers are skilled specialists with practical experience. Course developers have close contact with product development, and pass on their knowledge to the trainers and then to you.

Practical application with practice

Practice, practice, practice! We have designed the trainings with an emphasis on practical exercises. They take up to half of the course time in our trainings. You can therefore implement your new knowledge in practice even faster.

300 courses in more than 60 countries

We offer a total of about 300 classroom-based courses. You can find us at more than 50 locations in Germany, and in 62 countries worldwide. You can find which course is offered at which location at:
www.siemens.com/sitrain

Skills development

Do you want to develop skills and fill in gaps in your knowledge? Our solution: We will provide a program tailored exactly to your personal requirements. After an individual requirements analysis, we will train you in our training centers near you or directly at your offices. You will practice on the most modern training equipment with special exercise units. The individual training courses are optimally matched to each other and help with the continuous development of knowledge and skills. After finishing a training module, the follow-up measures make success certain, as well as the refreshment and deepening of the knowledge gained.

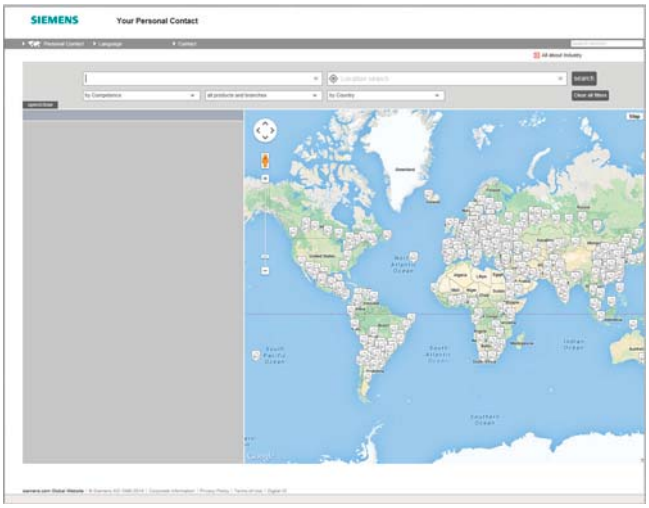

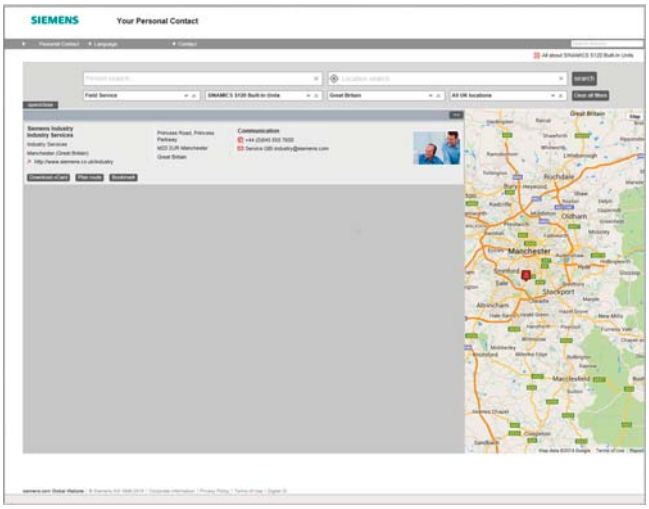

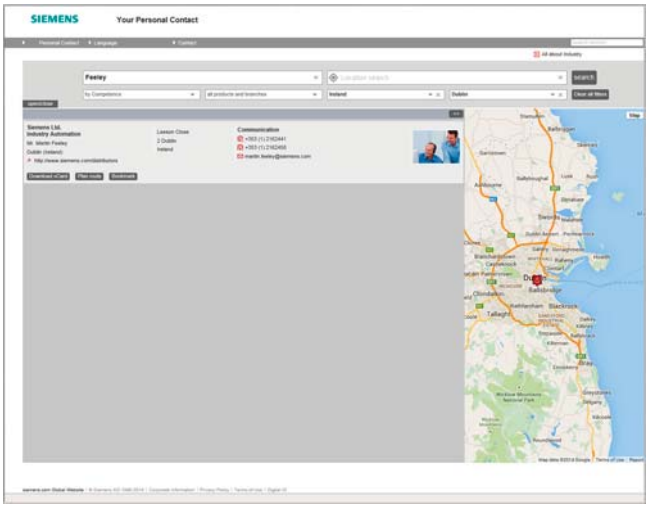

At Siemens we are resolutely pursuing the same goal: long-term improvement of your competitive ability.
We are committed to this goal. Thanks to our commitment, we continue to set new standards in automation and drive technology. In all industries – worldwide.

At your service locally, around the globe for consulting, sales, training, service, support, spare parts ... on the entire Industry Automation and Drive Technologies range.

Your personal contact can be found in our Contacts Database at:
www.siemens.com/automation/partner

You start by selecting

- the required competence,
- products and branches,
- a country,
- a city

or by a

- location search or
- person search.

Siemens Partner Program

Overview

Siemens Solution und Approved Partners

Highest competence in automation and drive technology as well as power distribution

Siemens works closely together with selected partner companies around the world in order to ensure that customer requirements for all aspects of automation and drives, as well as power distribution, are fulfilled as best as possible – wherever you are, and whatever the time. It is for this reason that we systematically train and keep our partners well prepared, in addition to certifying them in specific technologies. It is our declared intention and goal to train and prepare our partners to the same standards as our own employees.

This approach is based on contractually agreed quality criteria as well as optimum support for our partners by providing clearly-defined processes. This ensures that they possess all the qualities to meet customer requirements optimally. The partner emblem is the guarantee and indicator of proven quality.

Solution Partners and Approved Partners

The Siemens Partner Program distinguishes between Solution Partners and Approved Partners.

At present we are working with more than 1,400 Solution Partners worldwide. They represent countless tailored and future-proof automation and drive solutions in the most diverse industries.

With their extensive technical product knowledge, Siemens Approved Partners offer a combination of goods and services that include specialist technologies, customized modifications and the provision of high-quality system and product packages. They also provide qualified technical support and assistance

Partner Finder

In the Siemens global Solution Partner program, customers are certain to find the optimum partner for their specific requirements - with no great effort. The Partner Finder is basically a comprehensive database that showcases the profiles of all our solution partners.

Easy selection:
Set filters in the search screen form according to the criteria that are relevant to you. You can also directly enter the name of an existing partner.

Skills at a glance:
Gain a quick insight into the specific competencies of any particular partner with the reference reports.

Direct contact option:
Use our electronic query form:

www.siemens.com/partnerfinder

Additional information on the Siemens Solution Partner Program is available online at:

www.siemens.com/partner-program

Unique support for educators and students in educational institutions

Cooperates with Education

Automation

SIEMENS

Siemens Automation Cooperates with Education (SCE) offers a global system for sustained support of technical skills. SCE supports educational institutions in their teaching assignment in the industrial automation sector and offers added value in the form of partnerships, technical expertise, and know-how. As the technological leader, our comprehensive range of services can support you in the knowledge transfer for Industry 4.0.

Our services at a glance

- Training curriculums for your lessons
- Trainer packages for hands-on learning
- Courses convey up-to-date specialist knowledge
- Support for your projects / textbooks
- Complete didactic solutions from our partners
- Personal contact for individual support

Training curriculums for your lessons

Use our profound industrial know-how for practiceoriented and individual design of your course. We offer you more than 100 didactically prepared training curriculums on the topics of automation and drives technology free of charge. These materials are perfectly matched to your curricula and syllabuses, and optimally suited for use with our trainer packages. This takes into account all aspects of a modern industrial solution: installation, configuration, programming, and commissioning. All documents, including projects, can be individually matched to your specific requirements.

Particular highlights:

- The new SIMATIC PCS 7 curriculums and trainer packages. Using plant simulation, you can pass on basic, practice-oriented PCS 7 knowledge at universities within about 60 hours (= 1 semester).
- The new TIA Portal training materials for SIMATIC S7-1500 / S7-1200 / S7-300 are available in English, German, French, Italian, Spanish, Portuguese and Chinese for download.

www.siemens.com/sce/curriculums

Trainer packages for hands-on learning

Our SCE trainer packages offer a specific combination of original industrial components which are perfectly matched to your requirements and can be conveniently used in your course. These price-reduced bundles available exclusively to schools include innovative and flexible hardware and software packages.
SCE currently offers more than 80 SCE trainer packages including related equipment e.g. Micro Memory. These cover both the factory and process automation sectors. You can use them to impart the complete course contents on industrial automation at a very low cost.

Trainer packages are available for:

- Introduction to automation technology with LOGO! logic module
- PLC engineering with SIMATIC S7 hardware and STEP 7 software (S7-1500, S7-1200, S7-300 and TIA Portal)
- Operator control and monitoring with SIMATIC HMI
- Industrial networking over bus systems with SIMATIC NET (PROFINET, PROFIBUS, IO-Link)
- Sensor systems with VISION, RFID and SIWAREX
- Process automation with SIMATIC PCS 7
- Networked drive and motion technologies with SINAMICS/SIMOTION
- Power Monitoring Devices SENTRON PAC 4200
- Motor Management SIMOCODE
- CNC programming with SinuTrain

Important ordering notes:

Only the following institutions are authorized to obtain trainer packages: vocational schools, Colleges and Universities, in-house vocational training departments, non commercial research institutions and non commercial training departments.

To purchase a trainer package, you require a specific end-use certificate, which you can obtain from your regional sales office.

www.siemens.com/sce/tp

Unique support for educators and students in educational institutions (continued)

Courses convey up-to-date specialist knowledge

Profit from our excellent know-how as the leader in industrial technologies. We offer you specific courses for automation and drive technology worldwide. These support you in the practice-oriented transferring of product and system know-how, are in conformance with curriculums, and derived from the training fields. Compact technical courses especially for use at universities are also available.

Our range of courses comprises a wide variety of training modules based on the principle of Totally Integrated Automation (TIA). The focus is on the same subject areas as with the SCE trainer packages.

Every PLC and drive course is oriented on state-of-the-art technology. Your graduates can thus be prepared optimally for their future professional life.

In some countries we are offering classes based on our training curriculums. Please inquire with your SCE contact partner.

www.siemens.com/sce/courses

Support for your projects/textbooks

Automation and drive technology is characterized by continuous and rapid developments. Service and Support therefore play an important role.

We can provide you with consulting for selected projects and support from your personal SCE contact as well as our web-based and regional Customer Support.

As a particular service, SCE supports technical authors with our know-how as well as with intensive technical consulting. Siemens library of special textbooks covering the industrial automation sector provides an additional resource for you and your students. These can be found at the SCE web site.

www.siemens.com/sce/contact
www.siemens.com/sce/books

Complete didactic solutions from our partners

Our partners for learning systems offer a wide range of training systems and solutions for use in your courses or laboratory.

These models have been designed based on our trainer packages and thus save you the time and cost of selfconstruction of individual components. The Partner systems provide you with simple and effective help in the fulfillment of your teaching assignment.

www.siemens.com/sce/partner

Contact for individual support

You can find your personal SCE contact on our Internet site. Your local SCE Promoter will answer all your questions concerning the complete SCE offering, and provide you with timely and competent information about innovations. When you encounter challenges, you can profit from our global team of excellence.

If a direct SCE contact is not listed for your country, please contact your local Siemens office.

www.siemens.com/sce/contact

SCE Support Finder for your Internet request

You are an educator and need support on the topic of industry automation? Send us your request:

www.siemens.com/sce/supportfinder

Discover SCE

The Future of Manufacturing on the Internet

Detailed knowledge of the range of products and services available is essential when planning and engineering automation systems. It goes without saying that this information must always be as up-to-date as possible.

Industry is on the threshold of the fourth industrial revolution as digitization now follows after the automation of production. The goals are to increase productivity and efficiency, speed, and quality. In this way, companies can remain competitive on the path to the future of industry.

You will find everything you need to know about products, systems and services on the internet at:

www.siemens.com/industry

Product Selection Using the Interactive CA 01 Automation and Drives Catalog

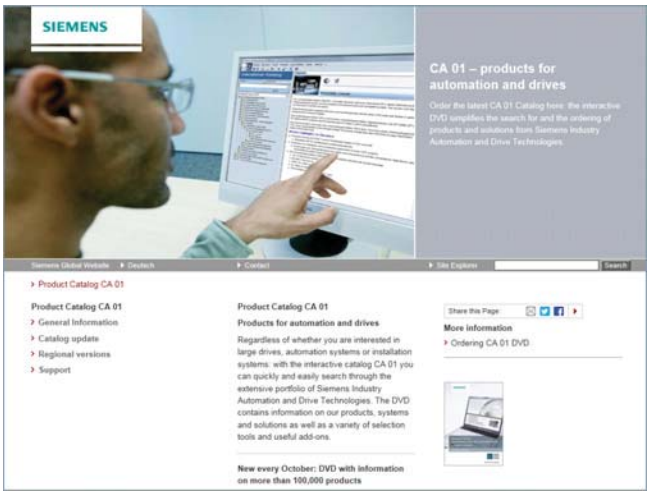

Detailed information together with user-friendly interactive functions:
The CA 01 interactive catalog covers more than 100,000 products, thus providing a comprehensive overview of the product range provided by Siemens.

You will find everything you need here for solving tasks in the fields of automation, switching, installation and drives.
All information is provided over a user interface that is both user-friendly and intuitive.

You can order the CA 01 product catalog from your Siemens sales contact or in the Information and Download Center:

www.siemens.com/industry/infocenter

Information about the CA 01 interactive catalog can be found on the Internet at:

www.siemens.com/automation/ca01

or on DVD.

Easy Shopping with the Industry Mall

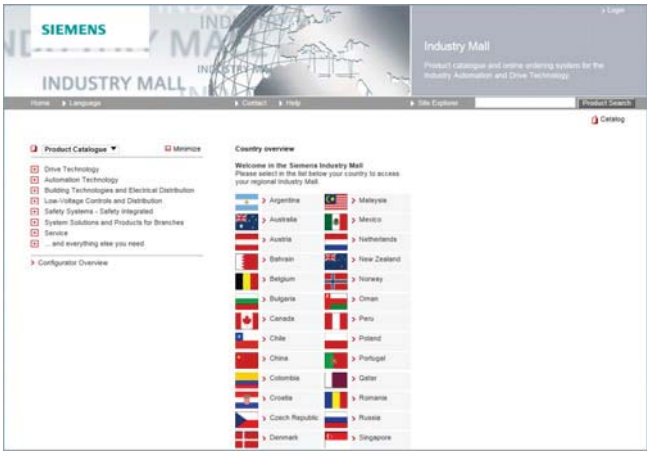

The Industry Mall is the electronic ordering platform of Siemens AG on the Internet. Here you have online access to a huge range of products presented in an informative and attractive way.

Data transfer via EDIFACT allows the whole procedure, from selection through ordering to tracking and tracing, to be carried out online. Availability checks, customer-specific discounts and bid creation are also possible.

Numerous additional functions are provided for your support. For example, powerful search functions make it easy to select the required products. Configurators enable you to configure complex product and system components quickly and easily. CAx data types are also provided here.

You can find the Industry Mall on the Internet at:

www.siemens.com/industrymall

Information and Download Center, Social Media, Mobile Media

Downloading Catalogs

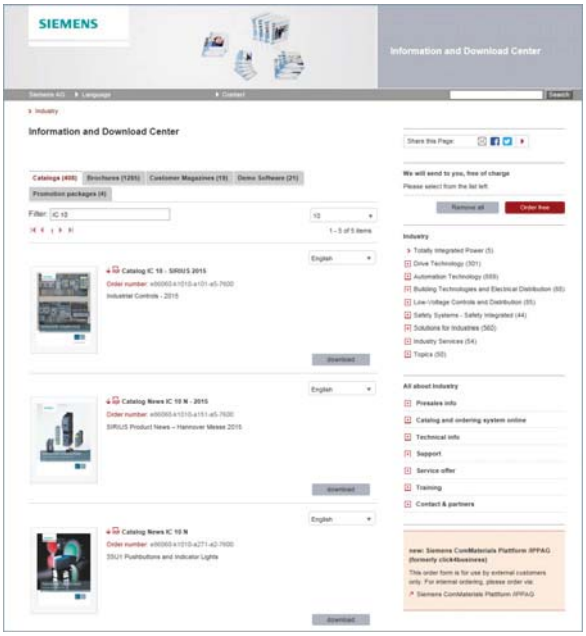

In addition to numerous other useful documents, you can also find the catalogs listed on the back inside cover of this catalog in the Information and Download Center. You can download these catalogs in PDF format without having to register.

The filter dialog above the first catalog displayed makes it possible to carry out targeted searches. If you enter "MD 3" for example, you will find both the MD 30.1 and MD 31.1 catalogs. If you enter "IC 10", both the IC 10 catalog and the associated news or add-ons are displayed.

Visit us at:

www.siemens.com/industry/infocenter

Social and Mobile Media

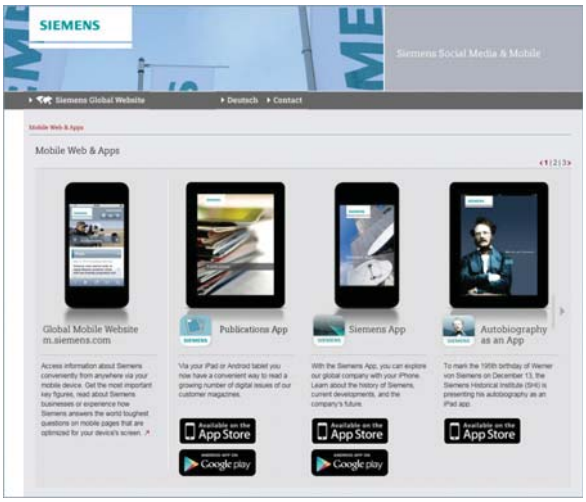

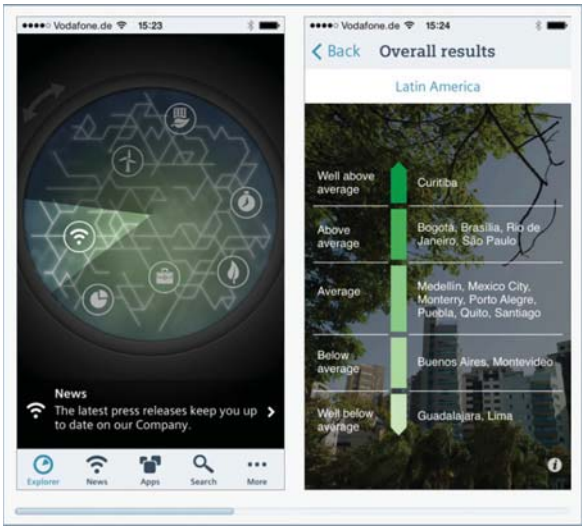

Connect with Siemens through social Media: visit our social networking sites for a wealth of useful information, demos on products and services, the opportunity to provide feedback, to exchange information and ideas with customers and other Siemens employees, and much, much more. Stay in the know and follow us on the ever-expanding global network of social Media.

To find out more about Siemens' current social Media activities, visit us at:

www.siemens.com/socialMedia

Or via our product pages at:

www.siemens.com/automation or www.siemens.com/drives

Connect with Siemens Industry at our central access point to read all the news on the future of manufacturing, watch current videos and inform yourself about all the latest industry developments:

www.siemens.com/future-of-manufacturing/news.html

Discover the world of Siemens.

We are also constantly expanding our offering of cross-platform apps for smartphones and tablets. You will find the current Siemens apps at the App Store (iOS) or at Google Play (Android):

https://itunes.apple.com/en/app/siemens/id452698392?mt=8

https://play.google.com/store/search?q=siemens

The Siemens app, for example, tells you all about the history, latest developments and future plans of the company – with informative pictures, fascinating reports and the most recent press releases.

Overview

Unleash potential – with services from Siemens

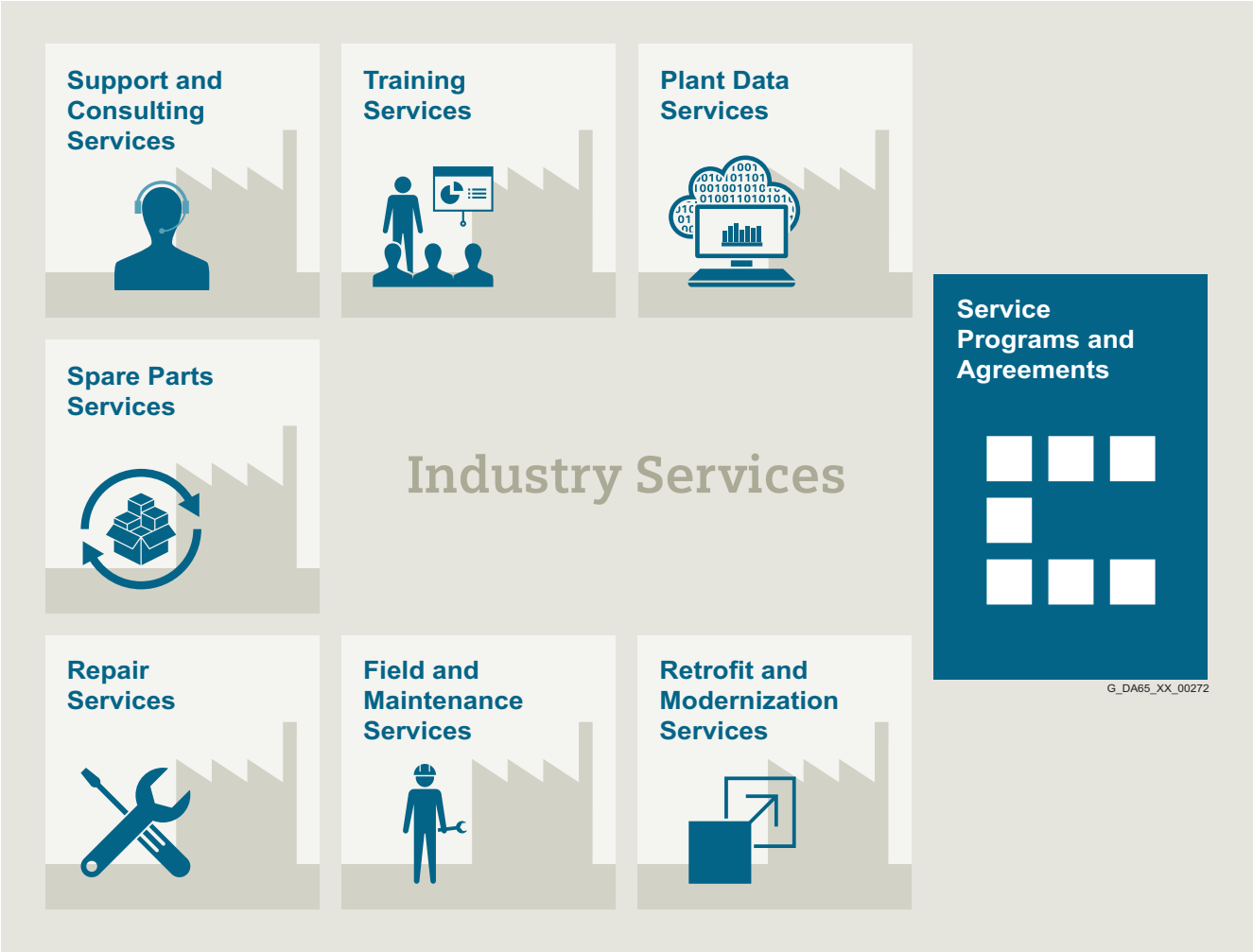

Increase your performance – with Industry Services

Optimizing the productivity of your equipment and operations can be a challenge, especially with constantly changing market conditions. Working with our service experts makes it easier. We understand your industry's unique processes and provide the services needed so that you can better achieve your business goals.

You can count on us to maximize your uptime and minimize your downtime, increasing your operations' productivity and reliability. When your operations have to be changed quickly to meet a new demand or business opportunity, our services give you the flexibility to adapt. Of course, we take care that your production is protected against cyber threats. We assist in keeping your operations as energy and resource efficient as possible and reducing your total cost of ownership. As a trendsetter, we ensure that you can capitalize on the opportunities of digitalization and by applying data analytics to enhance decision making: You can be sure that your plant reaches its full potential and retains this over the longer lifespan.

You can rely on our highly dedicated team of engineers, technicians and specialists to deliver the services you need – safely, professionally and in compliance with all regulations. We are there for you, where you need us, when you need us.

Industry Services – Portfolio overview

Overview

Plant Data Services

Make your industrial processes transparent to gain improvements in productivity, asset availability, and energy efficiency.

Production data is generated, filtered and translated with intelligent analytics to enhance decision-making.

This is done whilst taking data security into consideration and with continuous protection against cyber attack threats.

www.industry.siemens.com/services/global/en/portfolio/plant-data-services/Pages/index.aspx

Support and Consulting Services

Industry Online Support site for comprehensive information, application examples, FAQs and support requests.

Technical and Engineering Support for advice and answers for all inquiries about functionality, handling, and fault clearance.

Information & Consulting Services, e.g. SIMATIC System Audit; clarity about the state and service capability of your automation system or Lifecycle Information Services; transparency on the lifecycle of the products in your plants.

www.industry.siemens.com/services/global/en/portfolio/support-consulting/Pages/index.aspx

Training Services

From the basics and advanced to specialist skills, SITRAIN courses provide expertise right from the manufacturer – and encompass the entire spectrum of Siemens products and systems for the industry.

Worldwide, SITRAIN courses are available wherever you need a training course in more than 170 locations in over 60 countries.

www.industry.siemens.com/services/global/en/portfolio/training/Pages/index.aspx

Spare Parts Services

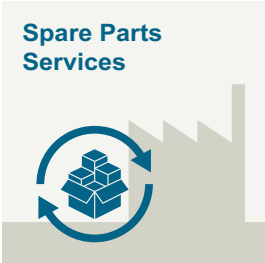

Are available worldwide for smooth and fast supply of spare parts – and thus optimal plant availability. Genuine spare parts are available for up to ten years. Logistic experts take care of procurement, transport, custom clearance, storage and order management. Reliable logistics processes ensure that components reach their destination as needed.

Asset optimization services help you design a strategy for parts supply where your investment and carrying costs are reduced and the risk of obsolescence is avoided.

www.industry.siemens.com/services/global/en/portfolio/spare_parts/Pages/index.aspx

Overview (continued)

Are offered on-site and in regional repair centers for fast restoration of faulty devices' functionality.

Also available are extended repair services, which include additional diagnostic and repair measures, as well as emergency services.

www.industry.siemens.com/services/global/en/portfolio/repair_services/Pages/index.aspx

Provide a cost-effective solution for the expansion of entire plants, optimization of systems or upgrading existing products to the latest technology and software, e.g. migration services for automation systems.

Service experts support projects from planning through commissioning and, if desired over the entire extended lifespan, e.g. Retrofit for Integrated Drive Systems for an extended lifetime of your machines and plants

www.industry.siemens.com/services/global/en/portfolio/retrofit-modernization/Pages/index.aspx

Siemens specialists are available globally to provide expert field and maintenance services, including commissioning, functional testing, preventive maintenance and fault clearance.
All services can be included in customized service agreements with defined reaction times or fixed maintenance intervals.

www.industry.siemens.com/services/global/en/portfolio/field_service/Pages/index.aspx

A technical Service Program or Agreement enables you to easily bundle a wide range of services into a single annual or multi-year agreement.

You pick the services you need to match your unique requirements or fill gaps in your organization's maintenance capabilities.
Programs and agreements can be customized as KPI-based and/or performance-based contracts.

www.industry.siemens.com/services/global/en/portfolio/service_programs/Pages/index.aspx

Overview

Online Support is a comprehensive information system for all questions relating to products, systems, and solutions that Siemens has developed for industry over time. With more than 300,000 documents, examples and tools, it offers users of automation and drive technology a way to quickly find up-to-date information. The 24-hour service enables direct, central access to detailed product information as well as numerous solution examples for programming, configuration and application.

The content, in six languages, is increasingly multiMedia-based – and now also available as a mobile app. Online support's "Technical Forum" offers users the opportunity to share information with each other. The "Support Request" option can be used to contact Siemens' technical support experts.
The latest content, software updates, and news via newsletters and Twitter ensure that industry users are always up to date.

www.siemens.com/industry/onlinesupport

Online Support App

Using the Online Support app, you can access over 300,000 documents covering all Siemens industrial products – anywhere, any time. Regardless of whether you need help implementing your project, fault-finding, expanding your system or are planning a new machine.

You have access to FAQs, manuals, certificates, characteristic curves, application examples, product notices (e.g. announcements of new products) and information on successor products in the event that a product is discontinued.

Just scan the product code printed on the product directly using the camera of your mobile device to imMediately see all technical information available on this product at a glance.
The graphical CAx information (3D model, circuit diagrams or EPLAN macros) is also displayed. You can forward this information to your workplace using the e-mail function.

The search function retrieves product information and articles and supports you with a personalized suggestion list. You can find your favorite pages – articles you need frequently – under "mySupport". You also receive selected news on new functions, important articles or events in the News section.

Scan the QR code for information on our Online Support app.

The app is available free of charge from the Apple App Store (iOS) or from Google Play (Android).

https://support.industry.siemens.com/cs/ww/en/sc/2067

Overview

Software types

Software requiring a license is categorized into types.
The following software types have been defined:

- Engineering software
- Runtime software

Engineering software

This includes all software products for creating (engineering) user software, e.g. for configuring, programming, parameterizing, testing, commissioning or servicing.

Data generated with engineering software and executable programs can be duplicated for your own use or for use by third-parties free-of-charge.

Runtime software

This includes all software products required for plant/machine operation, e.g. operating system, basic system, system expansions, drivers, etc.

The duplication of the runtime software and executable programs created with the runtime software for your own use or for use by third-parties is subject to a charge.

You can find information about license fees according to use in the ordering data (e.g. in the catalog). Examples of categories of use include per CPU, per installation, per channel, per instance, per axis, per control loop, per variable, etc.

Information about extended rights of use for parameterization/configuration tools supplied as integral components of the scope of delivery can be found in the readme file supplied with the relevant product(s).

License types

Siemens Industry Automation & Drive Technologies offers various types of software license:

- floating license
- Single license
- Rental license
- Rental floating license
- Trial license
- Demo license
- Demo floating license

floating license

The software may be installed for internal use on any number of devices by the licensee. Only the concurrent user is licensed. The concurrent user is the person using the program. Use begins when the software is started.
A license is required for each concurrent user.

Single license

Unlike the floating license, a single license permits only one installation of the software per license.

The type of use licensed is specified in the ordering data and in the Certificate of License (CoL). Types of use include for example per instance, per axis, per channel, etc.

One single license is required for each type of use defined.

Rental license

A rental license supports the "sporadic use" of engineering software. Once the license key has been installed, the software can be used for a specific period of time (the operating hours do not have to be consecutive).
One license is required for each installation of the software.

Rental floating license

The rental floating license corresponds to the rental license, except that a license is not required for each installation of the software. Rather, one license is required per object (for example, user or device).

Trial license

A trial license supports "short-term use" of the software in a non-productive context, e.g. for testing and evaluation purposes.
It can be transferred to another license.

Demo license

The demo license support the "sporadic use" of engineering software in a non-productive context, for example, use for testing and evaluation purposes. It can be transferred to another license. After the installation of the license key, the software can be operated for a specific period of time, whereby usage can be interrupted as often as required.

One license is required per installation of the software.

Demo floating license

The demo floating license corresponds to the demo license, except that a license is not required for each installation of the software. Rather, one license is required per object (for example, user or device).

Certificate of license (CoL)

The CoL is the licensee's proof that the use of the software has been licensed by Siemens. A CoL is required for every type of use and must be kept in a safe place.

Downgrading

The licensee is permitted to use the software or an earlier version/release of the software, provided that the licensee owns such a version/release and its use is technically feasible.

Delivery versions

Software is constantly being updated.
The following delivery versions

- PowerPack
- Upgrade

can be used to access updates.

Existing bug fixes are supplied with the ServicePack version.

PowerPack

PowerPacks can be used to upgrade to more powerful software. The licensee receives a new license agreement and CoL (Certificate of License) with the PowerPack. This CoL, together with the CoL for the original product, proves that the new software is licensed.
A separate PowerPack must be purchased for each original license of the software to be replaced.

Upgrade

An upgrade permits the use of a new version of the software on the condition that a license for a previous version of the product is already held.
The licensee receives a new license agreement and CoL with the upgrade. This CoL, together with the CoL for the previous product, proves that the new version is licensed.
A separate upgrade must be purchased for each original license of the software to be upgraded.

Software Licenses

Overview

ServicePack

ServicePacks are used to debug existing products. ServicePacks may be duplicated for use as prescribed according to the number of existing original licenses.

License key

Siemens Industry Automation & Drive Technologies supplies software products with and without license keys.

The license key serves as an electronic license stamp and is also the "switch" for activating the software (floating license, rental license, etc.).

The complete installation of software products requiring license keys includes the program to be licensed (the software) and the license key (which represents the license).

Software Update Service (SUS)

As part of the SUS contract, all software updates for the respective product are made available to you free of charge for a period of one year from the invoice date. The contract will automatically be extended for one year if it is not canceled three months before it expires.

The possession of the current version of the respective software is a basic condition for entering into an SUS contract.

You can download explanations concerning license conditions from www.siemens.com/automation/salesmaterial-as/catalog/en/terms_of_trade_en.pdf

Conditions of sale and delivery

1. General Provisions

By using this catalog you can acquire hardware and software products described therein from Siemens AG subject to the following Terms and Conditions of Sale and Delivery (hereinafter referred to as "T&C"). Please note that the scope, the quality and the conditions for supplies and services, including software products, by any Siemens entity having a registered office outside Germany, shall be subject exclusively to the General Terms and Conditions of the respective Siemens entity. The following T&C apply exclusively for orders placed with Siemens Aktiengesellschaft, Germany.

1.1 For customers with a seat or registered office in Germany

For customers with a seat or registered office in Germany, the following applies subordinate to the T&C:

- the "General Terms of Payment"[1] and,
- for software products, the "General License Conditions for Software Products for Automation and Drives for Customers with a Seat or Registered Office in Germany"[1] and,
- for other supplies and services, the "General Conditions for the Supply of Products and Services of the Electrical and Electronics Industry"[1].

1.2 For customers with a seat or registered office outside Germany

For customers with a seat or registered office outside Germany, the following applies subordinate to the T&C:

- the "General Terms of Payment"[1] and,
- for software products, the "General License Conditions for Software Products for Automation and Drives for Customers with a Seat or Registered Office outside of Germany"[1] and
- for other supplies and/or services, the "General Conditions for Supplies of Siemens Industry for Customers with a Seat or Registered Office outside of Germany"[1].

2. Prices

The prices are in € (Euro) ex point of delivery, exclusive of packaging.

The sales tax (value added tax) is not included in the prices. It shall be charged separately at the respective rate according to the applicable statutory legal regulations.

Prices are subject to change without prior notice. We will charget the prices valid at the time of delivery.

To compensate for variations in the price of raw materials (e.g. silver, copper, aluminum, lead, gold, dysprosium and neodym), surcharges are calculated on a daily basis using the so-called metal factor for products containing these raw materials. A surcharge for the respective raw material is calculated as a supplement to the price of a product if the basic official price of the raw material in question is exceeded.

The metal factor of a product indicates the basic official price (for those raw materials concerned) as of which the surcharges on the price of the product are applied, and with what method of calculation.

An exact explanation of the metal factor can be downloaded at:

www.siemens.com/automation/salesmaterial-as/catalog/en/terms_of_trade_en.pdf

To calculate the surcharge (except in the cases of dysprosium and neodym), the official price from the day prior to that on which the order was received or the release order was effected is used.

To calculate the surcharge applicable to dysprosium and neodym ("rare earths"), the corresponding three-month basic average price in the quarter prior to that in which the order was received or the release order was effected is used with a one-month buffer (details on the calculation can be found in the explanation of the metal factor).

3. Additional Terms and Conditions

The dimensions are in mm. In Germany, according to the German law on units in measuring technology, data in inches apply only to devices for export.

Illustrations are not binding.

Insofar as there are no remarks on the individual pages of this catalog - especially with regard to data, dimensions and weights given - these are subject to change without prior notice.

4. Export regulations

We shall not be obligated to fulfill any agreement if such fulfillment is prevented by any impediments arising out of national or international foreign trade or customs requirements or any embargoes and/or other sanctions.

Export of goods listed in this catalog may be subject to licensing requirements. We will indicate in the delivery details whether licenses are required under German, European and US export lists. Goods labeled with "AL" not equal to "N" are subject to European or German export authorization when being exported out of the EU. Goods labeled with "ECCN" not equal to "N" are subject to US re-export authorization.

The export indications can be viewed in advance in the description of the respective goods on the Industry Mall, our online catalog system. Only the export labels "AL" and "ECCN" indicated on order confirmations, delivery notes and invoices are authoritative.

Even without a label, or with label "AL:N" or "ECCN:N", authorization may be required i .a. due to the final disposition and intended use of goods.

If you transfer goods (hardware and/or software and/or technology as well as corresponding documentation, regardless of the mode of provision) delivered by us or works and services (including all kinds of technical support) performed by us to a third party worldwide, you must comply with all applicable national and international (re-)export control regulations.

If required for the purpose of conducting export control checks, you (upon request by us) shall promptly provide us with all information pertaining to the particular end customer, final disposition and intended use of goods delivered by us respectively works and services provided by us, as well as to any export control restrictions existing in this relation.

The products listed in this catalog may be subject to European/German and/or US export regulations. Any export requiring approval is therefore subject to authorization by the relevant authorities.

Errors excepted and subject to change without prior notice.

1) The text of the Terms and Conditions of Siemens AG can be downloaded at www.siemens.com/automation/salesmaterial-as/catalog/en/terms_of_trade_en.pdf

Catalogs

Digital Factory, Process Industries and Drives and Energy Management

Further information can be obtained from our branch offices listed at www.siemens.com/automation/partner

Interactive Catalog on DVD	*Catalog*
Products for Automation and Drives	**CA 01**

Building Control	
GAMMA Building Control	ET G1

Drive Systems	
SINAMICS G130 Drive Converter Chassis Units SINAMICS G150 Drive Converter Cabinet Units	D 11
SINAMICS GM150, SINAMICS SM150 Medium-Voltage Converters	D 12
SINAMICS PERFECT HARMONY GH180 Medium-Voltage Air-Cooled Drives Germany Edition	D 15.1
SINAMICS G180 Converters – Compact Units, Cabinet Systems, Cabinet Units Air-Cooled and Liquid-Cooled	D 18.1
SINAMICS S120 Chassis Format Units and Cabinet Modules SINAMICS S150 Converter Cabinet Units	D 21.3
SINAMICS DCM DC Converter, Control Module	D 23.1
SINAMICS DCM Cabinet	D 23.2
SINAMICS Inverters for Single-Axis Drives and SIMOTICS Motors	D 31
SINAMICS G120P and SINAMICS G120P Cabinet pump, fan, compressor converters	D 35
LOHER VARIO High Voltage Motors Flameproof, Type Series 1PS4, 1PS5, 1MV4 and 1MV5 Frame Size 355 to 1000, Power Range 80 to 7100 kW	D 83.2
Three-Phase Induction Motors SIMOTICS HV, SIMOTICS TN • Series H-compact • Series H-compact PLUS	D 84.1
High Voltage Three-phase Induction Motors SIMOTICS HV Series A-compact PLUS	D 84.9
Three-Phase Induction Motors SIMOTICS HV, Series H-compact	D 86.1
Synchronous Motors with Permanent-Magnet Technology, HT-direct	D 86.2
DC Motors	DA 12
SIMOREG DC MASTER 6RA70 Digital Chassis Converters	DA 21.1
SIMOREG K 6RA22 Analog Chassis Converters	DA 21.2
Digital: SIMOREG DC MASTER 6RM70 Digital Converter Cabinet Units	*DA 22*
SIMOVERT PM Modular Converter Systems	DA 45
SIEMOSYN Motors	DA 48
MICROMASTER 420/430/440 Inverters	DA 51.2
MICROMASTER 411/COMBIMASTER 411	DA 51.3
Low-Voltage Three-Phase-Motors	
SIMOTICS Low-Voltage Motors	D 81.1
SIMOTICS FD Low-Voltage Motors	D 81.8
LOHER Low-Voltage Motors	D 83.1
MOTOX Geared Motors	D 87.1
SIMOGEAR Geared Motors	MD 50.1
SIMOGEAR Gearboxes with adapter	MD 50.11
Mechanical Driving Machines	
FLENDER Standard Couplings	MD 10.1
FLENDER High Performance Couplings	MD 10.2
FLENDER Backlash-free Couplings	MD 10.3
FLENDER SIP Standard industrial planetary gear units	MD 31.1

Process Instrumentation and Analytics	
Digital: Field Instruments for Process Automation	*FI 01*
Digital: SIPART Controllers and Software	*MP 31*
Products for Weighing Technology	WT 10
Digital: Process Analytical Instruments	*AP 01*
Digital: Process Analytics, Components for Continuous Emission Monitoring	*AP 11*

Low-Voltage Power Distribution and Electrical Installation Technology	*Catalog*
SENTRON · SIVACON · ALPHA Protection, Switching, Measuring and Monitoring Devices, Switchboards and Distribution Systems	LV 10
Standards-Compliant Components for Photovoltaic Plants	LV 11
Electrical Components for the Railway Industry	LV 12
TÜV-certified Power Monitoring System	LV 14
Components for Industrial Control Panels according to UL Standards	LV 16
3WT Air Circuit Breakers up to 4000 A	LV 35
3VT Molded Case Circuit Breakers up to 1600 A	LV 36
Digital: SIVACON System Cubicles, System Lighting and System Air-Conditioning	*LV 50*
Digital: ALPHA Distribution Systems	*LV 51*
ALPHA FIX Terminal Blocks	LV 52
SIVACON S4 Power Distribution Boards	LV 56
SIVACON 8PS Busbar Trunking Systems	LV 70
Digital: DELTA Switches and Socket Outlets	*ET D1*

Motion Control	
SINUMERIK 840 Equipment for Machine Tools	NC 62
SINUMERIK 808 Equipment for Machine Tools	NC 81.1
SINUMERIK 828 Equipment for Machine Tools	NC 82
SIMOTION, SINAMICS S120 & SIMOTICS Equipment for Production Machines	PM 21
Digital: Drive and Control Components for Cranes	*CR 1*

Power Supply	
SITOP Power supply	KT 10.1

Safety Integrated	
Safety Technology for Factory Automation	SI 10

SIMATIC HMI / PC-based Automation	
Human Machine Interface Systems/ PC-based Automation	ST 80/ ST PC

SIMATIC Ident	
Industrial Identification Systems	ID 10

SIMATIC Industrial Automation Systems	
Products for Totally Integrated Automation	ST 70
SIMATIC PCS 7 Process Control System System components	ST PCS 7
SIMATIC PCS 7 Process Control System Technology components	ST PCS 7 T
Add-ons for the SIMATIC PCS 7 Process Control System	ST PCS 7 AO

SIMATIC NET	
Industrial Communication	IK PI

SIRIUS Industrial Controls	
Digital: SIRIUS Industrial Controls	*IC 10*

Digital: These catalogs are only available as a PDF.

Information and Download Center

Digital versions of the catalogs are available on the Internet at:
www.siemens.com/industry/infocenter
There you'll find additional catalogs in other languages.

Please note the section "Downloading catalogs" on page "Online services" in the appendix of this catalog.

Industrial Security

Siemens provides automation and drive products with industrial security functions that support the secure operation of plants or machines. They are an important component in a holistic industrial security concept. With this in mind, our products undergo continuous development. We therefore recommend that you keep yourself informed with respect to our product updates. Please find further information and newsletters on this subject at:
http://support.automation.siemens.com

To ensure the secure operation of a plant or machine it is also necessary to take suitable preventive action (e.g. cell protection concept) and to integrate the automation and drive components into a state-of-the-art holistic industrial security concept for the entire plant or machine. Any third-party products that may be in use must also be taken into account. Please find further information at:
http://www.siemens.com/industrialsecurity

Get more information

Comprehensive information concerning the SIMATIC PCS 7 process control system:
www.siemens.com/simatic-pcs7

Siemens AG
Process Industries and Drives
Automation and Engineering
76181 KARLSRUHE
GERMANY

Subject to change without prior notice
Article No. E86060-K4678-A111-C3-7600
W-FPN6Z-PD-PAK11 / Dispo 09508
KG 0516 1. PAS 544 En
Printed in Germany

www.siemens.com/automation